MADISON FIRE DEPARTMENT
FIRE STATION 14

3201 DAIRY DRIVE
MADISON, WI 53703

PROJECT NARRATIVE / LETTER OF INTENT

Madison Fire Department is proposing a new fire station on the southeast side of the city located at 3201 Dairy Drive. The site encompasses three parcels (Lot 34, 35 and 36) east of Dairy Drive and north of Femrite Drive. The parcels are zoned SE (Suburban Employment District) and the gross area of the combined parcels is 481,949 square feet (11.06 acres). There are no existing buildings on the proposed site, however has been previously developed. An asphalt driveway off Femrite and gravel roads and concrete pads from a previous business remain on site. A major 50-foot wide gas utility easement runs east-west through the southern portion of Lots 34 and 35. The site is gradual as it generally slopes east and north toward the adjacent wetland. The fire station is 20,300 square feet. The building design includes (6) pull-through apparatus bays with the intent to allocate space for indoor training and physical agility testing. The public portion of the building consists of a large break room / vestibule space, a 1,100 square foot community room and two small meeting rooms. This intent of the public spaces is to provide a variety spaces that can serve the community as well as the station. A restroom core, turnout gear, EMS storage and laundry rooms are the central core of the space. The living quarters are located in the back (east side) of the station. Offices, Dormitories, a fitness room and a large great room that combines a kitchen and living room. The hours of operation are 24 hours per day, 7 days per week. See site plan and landscape plan for proposed parking, bike parking and open space calculations. This project is 100% publicly subsidized.

DRAWING INDEX

A000 COVER

CIVIL DRAWINGS

C100 EXISTING SITE PLAN
C101 DEMOLITION PLAN
C200 OVERALL GRADING & EROSION CONTROL PLAN
C201 SITE PLAN
C202 SITE GRADING PLAN
C203 SITE GRADING PLAN
C204 SITE GRADING PLAN
C205 UTILITY PLAN
C300 EROSION CONTROL DETAILS
C301 PLAN DETAILS
C302 PLAN DETAILS
C303 PLAN DETAILS

LANDSCAPE DRAWINGS

L101 LANDSCAPE PLAN
L151 LANDSCAPE PLAN ENLARGEMENTS
L152 LANDSCAPE PLAN ENLARGEMENTS
L201 LANDSCAPE ELEVATIONS
L301 LANDSCAPE DETAILS

ARCHITECTURAL DRAWINGS

A001 GENERAL DRAWING INFORMATION
A002 ASSEMBLY TYPES
A003 CODE REVIEW
A101 FLOOR PLAN LEVEL 1
A101.A FLOOR PLAN LEVEL 1.A
A101.B FLOOR PLAN LEVEL 1.B
A102 MEZZANINE PLAN
A121 REFLECTED CEILING PLAN
A131 FINISH PLAN
A141 ROOF PLAN
A142 ROOF PLAN - PHOTOVOLTAIC DESIGN
A201 EXTERIOR ELEVATIONS
A210 ENLARGED EXTERIOR ELEVATIONS
A211 ENLARGED EXTERIOR ELEVATIONS
A212 ENLARGED EXTERIOR ELEVATIONS
A215 WINDOW ELEVATIONS
A216 POLYCARBONATE ELEVATIONS
A220 STANDARD DETAILS
A301 BUILDING SECTIONS
A311 WALL SECTIONS
A312 WALL SECTIONS
A313 WALL SECTIONS
A314 WALL SECTIONS
A341 SECTION DETAILS
A342 SECTION DETAILS
A343 SECTION DETAILS
A344 SECTION DETAILS
A371 PLAN DETAILS
A372 PLAN DETAILS
A373 PLAN DETAILS
A401 INTERIOR ELEVATIONS
A402 INTERIOR ELEVATIONS
A403 INTERIOR ELEVATIONS
A404 INTERIOR ELEVATIONS
A405 INTERIOR ELEVATIONS
A406 INTERIOR ELEVATIONS
A407 INTERIOR ELEVATIONS
A501 FURNITURE PLAN
A601 FINISH SCHEDULE AND SPECIFICATIONS
A602 DOOR SCHEDULE, PANEL AND FRAME TYPES
A701 CASEWORK DETAILS
A702 CASEWORK DETAILS
A801 ALTERNATE #1
A802 MOCK-UP

STRUCTURAL DRAWINGS

S001 GENERAL NOTES
S002 FOUNDATION LOAD PLAN
S101 FOUNDATION PLAN
S102 MEZZANINE FRAMING PLANS - AREA A AND B
S103 ROOF FRAMING PLAN
S201 FOUNDATION DETAILS
S202 FOUNDATION DETAILS
S301 PRECAST DETAILS
S401 MASONRY DETAILS
S402 MASONRY WALL ELEVATIONS
S501 STEEL DETAILS
S502 STEEL DETAILS

MECHANICAL DRAWINGS

M000 COVER SHEET - MECHANICAL
M050 SITE PLAN - MECHANICAL
M101 FLOOR PLAN LEVEL 1 - VENTILATION
M102 MEZZANINE PLAN - VENTILATION
M103 ROOF PLAN - MECHANICAL
M201 FLOOR PLAN LEVEL 1 - PIPING
M202 MEZZANINE PLAN - PIPING
M300 ENLARGED PLANS AND SECTIONS - MECHANICAL
M301 ENLARGED PLANS AND SECTION - MECHANICAL
M350 FLOW DIAGRAM - MECHANICAL
M351 FLOW DIAGRAM - MECHANICAL
M400 DETAILS - MECHANICAL
M401 DETAILS - MECHANICAL
M402 DETAILS - MECHANICAL
M403 DETAILS - MECHANICAL
M404 DETAILS - MECHANICAL
M450 CONTROL DIAGRAMS - MECHANICAL
M451 CONTROL DIAGRAMS - MECHANICAL
M452 CONTROL DIAGRAMS - MECHANICAL
M453 CONTROL DIAGRAMS - MECHANICAL
M454 CONTROL DIAGRAMS - MECHANICAL
M500 SCHEDULES - MECHANICAL
M501 SCHEDULES - MECHANICAL

ELECTRICAL DRAWINGS

E000 ELECTRICAL COVER SHEET
E050 SITE PLAN - ELECTRICAL
EL101 FLOOR PLAN LEVEL 1 - LIGHTING
EL102 MEZZANINE PLAN - LIGHTING
EP101 FLOOR PLAN LEVEL 1 - POWER
EP102 MEZZANINE PLAN - POWER
ES101 FLOOR PLAN LEVEL 1 - FIRE ALARM
ES102 MEZZANINE PLAN - FIRE ALARM
E103 ROOF PLAN - ELECTRICAL
E200 ONE-LINE DIAGRAM - ELECTRICAL
E300 DETAILS AND SCHEDULES - ELECTRICAL
E301 DETAILS AND SCHEDULES - ELECTRICAL

PLUMBING DRAWINGS

P000 PLUMBING COVER SHEET
P101 UNDERFLOOR PLAN - PLUMBING
P102 FLOOR PLAN LEVEL 1 - PLUMBING
P103 MEZZANINE PLAN - PLUMBING
P104 ROOF PLAN - PLUMBING
P200 ENLARGED PLAN - PLUMBING
P300 DOMESTIC WATER FLOW DIAGRAM - PLUMBING
P301 DETAILS - PLUMBING
P400 RISER DIAGRAM - SOUTH - PLUMBING
P401 RISER DIAGRAM - NORTH - PLUMBING
P402 RISER DIAGRAM - SOUTH - PLUMBING
P403 RISER DIAGRAM - NORTH - PLUMBING
P500 MATERIALS LIST - PLUMBING

TECHNOLOGY DRAWINGS

T000 TECHNOLOGY COVER SHEET
T001 GENERAL TECHNOLOGY EQUIPMENT SCHEDULE
T100 SITE PLAN - TECHNOLOGY
T101 FLOOR PLAN LEVEL 1 - TECHNOLOGY
T102 MEZZANINE PLAN - TECHNOLOGY
T300 ENLARGED PLANS - TECHNOLOGY
T400 RISER DIAGRAMS - TECHNOLOGY
T401 RISER DIAGRAMS - TECHNOLOGY
T500 DETAILS AND SCHEDULES - TECHNOLOGY
T501 DETAILS AND SCHEDULES - TECHNOLOGY

FIRE PROTECTION DRAWINGS

F000 FIRE PROTECTION COVER SHEET
F100 RISER DIAGAM - FIRE PROTECTION
F101 FLOOR PLAN LEVEL 1 - FIRE PROTECTION
F102 MEZZANINE PLAN - FIRE PROTECTION

1 LOCATOR MAP - PROJECT LOCATION - NEIGHBORHOOD SCALE
NOT TO SCALE

2 RENDER
NOT TO SCALE

OPN ARCHITECTS
301 N BROOM STREET #100
MADISON, WI 53703
608-819-0260 PHONE
www.opnarchitects.com
opn@opnarchitects.com

All reports, plans, specifications, computer files, field data, notes and other documents and instruments prepared by OPN Architects, Inc. as instruments of service shall remain the property of OPN Architects, Inc. OPN Architects, Inc. shall retain all common law, statutory and other reserved rights, including the copyright thereto.

© 2017 OPN Architects, Inc.

Owner
City of Madison Fire Department
314 W. Dayton St.
Madison, WI 53703

Project
Madison Fire Station 14
3201 Dairy Drive
Madison, WI 53718

Civil Engineer
Snyder & Associates, Inc
5010 Voges Rd
Madison WI, 53718
P. 608-838-0444

Structural Engineer
IMEG
1800 Deming Way #200
Middleton, WI 53562
P. 608-223-0444

Mechanical Engineer
IMEG
1800 Deming Way #200
Middleton, WI 53562
P. 608-223-0444

Electrical Engineer
IMEG
1800 Deming Way #200
Middleton, WI 53562
P. 608-223-0444

Key Plan

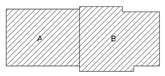

Sheet Issue Date
BID DOCUMENTS 11/03/17

Revision Date

ARCHITECT OF RECORD:
OPN ARCHITECTS

I hereby certify these plans and specifications were prepared by me or under my direct personal supervision and that I am a duly Registered Architect under the laws of the State of Wisconsin.

WISCONSIN WESLEY T. REYNOLDS 11709-5 MADISON, WISCONSIN ARCHITECT

Name: WESLEY REYNOLDS
Dicipline: ARCHITECT

CIVIL ENGINEER:
SNYDER & ASSOCIATES, INC.

I hereby certify that this civil engineering document and the related work was prepared by me or under my direct personal supervision and that I am a duly licensed Professional Engineer under the laws of the State of Wisconsin.

WISCONSIN SCOTT J. ANDERSON E-38818 WAUNAKEE WI PROFESSIONAL ENGINEER

11/2/17 Civil

Name: SCOTT ANDERSON
Dicipline: CIVIL ENGINEER

STRUCTURAL ENGINEER:
IMEG CORP.

I hereby certify that this engineering document was prepared by me or under my direct supervision and that I am a duly licensed Professional Engineer under the laws of the State of Wisconsin.

WISCONSIN ABBY PERTZBORN E-38745-6 MADISON WI PROFESSIONAL ENGINEER

11/2/17 STRUCTURAL

Name: ABBY A. PERTZBORN
Dicipline: STRUCTURAL ENGINEER

MECHANICAL / ELECTRICAL ENGINEER:
IMEG CORP.

I hereby certify that this engineering document was prepared by me or under my direct supervision and that I am a duly licensed Professional Engineer under the laws of the State of Wisconsin.

WISCONSIN PAUL P. HANSEN E-41764-6 COTTAGE GROVE WI PROFESSIONAL ENGINEER

11-2-17 Mech

Name: PAUL HANSEN
Dicipline: MECHANICAL ENGINEER

PUBLIC IMPROVEMENT PROJECT APPROVED:	PUBLIC IMPROVEMENT DESIGN APPROVED BY:
RES – 17 – 00833	CITY ENGINEER
FILE ID 49015	November 3, 2017
DATE October 17, 2017	DATE
BY THE COMMON COUNCIL OF MADISON, WI	

BID DOCUMENTS

Drawing
COVER

City of Madison Contract No. **8027**
OPN Project No. **17207000**

A000

PRINTED:

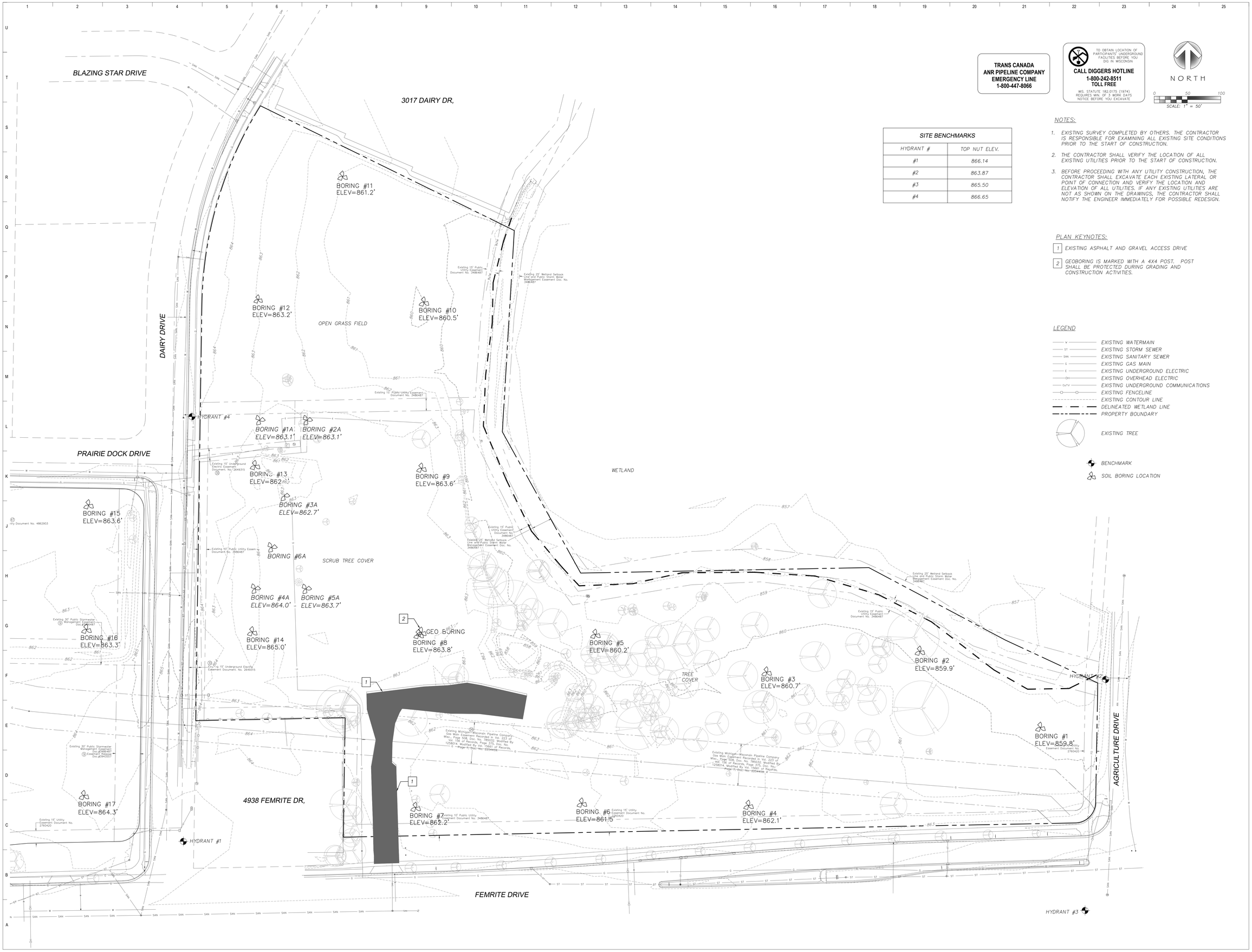

TRANS CANADA
ANR PIPELINE COMPANY
EMERGENCY LINE
1-800-447-8066

TO OBTAIN LOCATION OF PARTICIPANTS' UNDERGROUND FACILITIES BEFORE YOU DIG IN WISCONSIN

CALL DIGGERS HOTLINE
1-800-242-8511
TOLL FREE

WIS. STATUTE 182.0175 (1974) REQUIRES MIN. OF 3 WORK DAYS NOTICE BEFORE YOU EXCAVATE

NORTH

0 50 100
SCALE: 1" = 50'

SITE BENCHMARKS	
HYDRANT #	TOP NUT ELEV.
#1	866.14
#2	863.87
#3	865.50
#4	866.65

NOTES:

1. EXISTING SURVEY COMPLETED BY OTHERS. THE CONTRACTOR IS RESPONSIBLE FOR EXAMINING ALL EXISTING SITE CONDITIONS PRIOR TO THE START OF CONSTRUCTION.
2. THE CONTRACTOR SHALL VERIFY THE LOCATION OF ALL EXISTING UTILITIES PRIOR TO THE START OF CONSTRUCTION.
3. BEFORE PROCEEDING WITH ANY UTILITY CONSTRUCTION, THE CONTRACTOR SHALL EXCAVATE EACH EXISTING LATERAL OR POINT OF CONNECTION AND VERIFY THE LOCATION AND ELEVATION OF ALL UTILITIES. IF ANY EXISTING UTILITIES ARE NOT AS SHOWN ON THE DRAWINGS, THE CONTRACTOR SHALL NOTIFY THE ENGINEER IMMEDIATELY FOR POSSIBLE REDESIGN.

PLAN KEYNOTES:

1. EXISTING ASPHALT AND GRAVEL ACCESS DRIVE
2. GEOBORING IS MARKED WITH A 4X4 POST. POST SHALL BE PROTECTED DURING GRADING AND CONSTRUCTION ACTIVITIES.

LEGEND

- EXISTING WATERMAIN
- EXISTING STORM SEWER
- EXISTING SANITARY SEWER
- EXISTING GAS MAIN
- EXISTING UNDERGROUND ELECTRIC
- EXISTING OVERHEAD ELECTRIC
- EXISTING UNDERGROUND COMMUNICATIONS
- EXISTING FENCELINE
- EXISTING CONTOUR LINE
- DELINEATED WETLAND LINE
- PROPERTY BOUNDARY
- EXISTING TREE
- BENCHMARK
- SOIL BORING LOCATION

OPN ARCHITECTS
301 N BROOM STREET #100
MADISON, WI 53703
608-819-0260 PHONE
www.opnarchitects.com
opn@opnarchitects.com

All reports, plans, specifications, computer files, field data, notes and other documents and instruments prepared by OPN Architects, Inc. as instruments of service shall remain the property of OPN Architects, Inc. OPN Architects, Inc. shall retain all common law, statutory and other reserved rights, including the copyright thereto.

© 2017 OPN Architects, Inc.

Owner
City of Madison Fire Department
314 W. Dayton St.
Madison, WI 53703

Project
Madison Fire Station 14
3201 Dairy Drive
Madison, WI 53718

Civil Engineer
Snyder & Associates, Inc
5010 Voges Rd
Madison WI, 53718
P. 608-838-0444

Structural Engineer
IMEG
1800 Deming Way #200
Middleton, WI 53562
P. 608-223-0444

Mechanical Engineer
IMEG
1800 Deming Way #200
Middleton, WI 53562
P. 608-223-0444

Electrical Engineer
IMEG
1800 Deming Way #200
Middleton, WI 53562
P. 608-223-0444

Key Plan

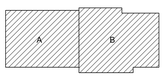

Sheet Issue Date	
BID DOCUMENTS	11/03/17

Revision	Date

BID DOCUMENTS

Drawing
Existing Site Plan

City of Madison Contract No. **8027**
OPN Project No. **17207000**

C100

PRINTED:

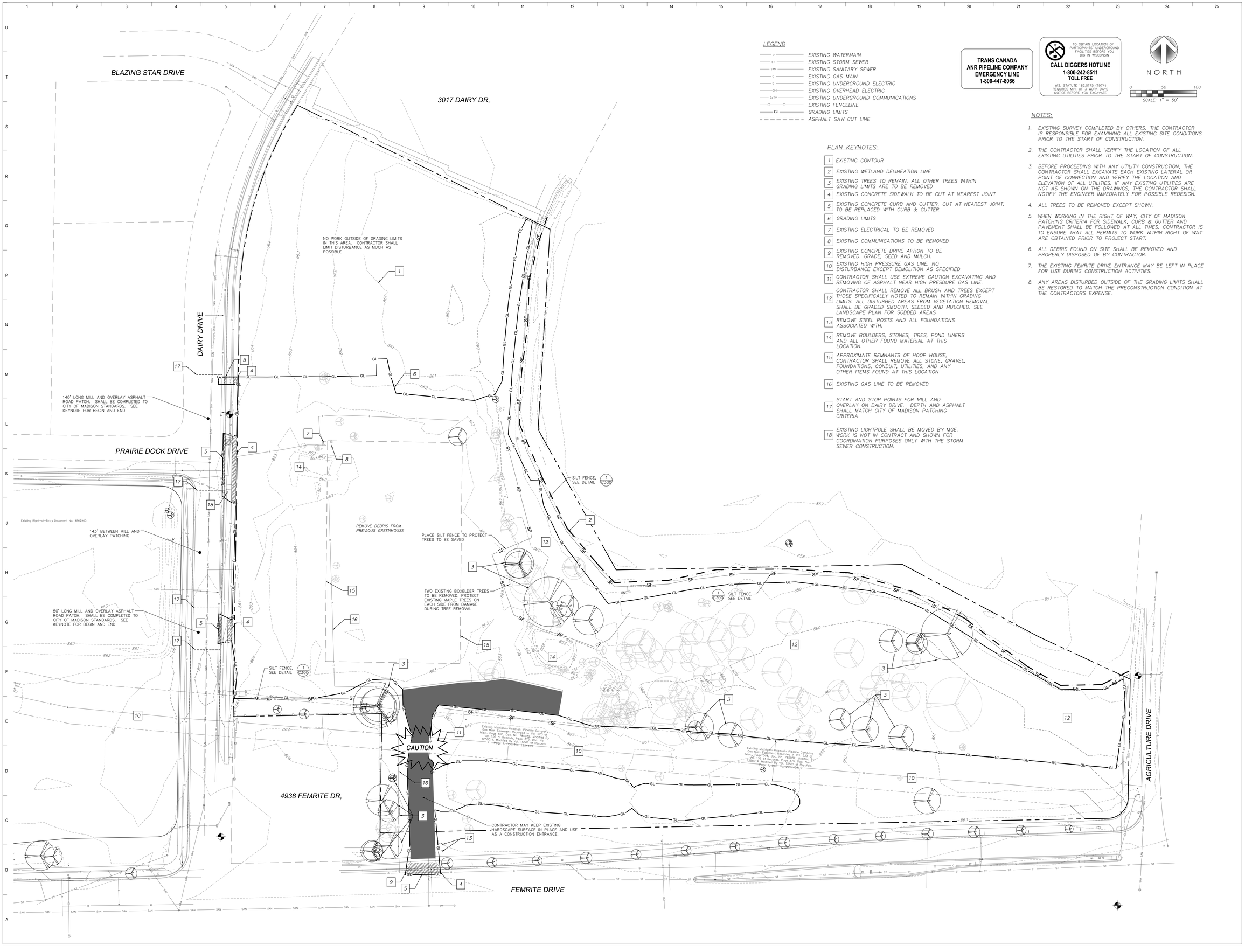

LEGEND

- EXISTING WATERMAIN
- EXISTING STORM SEWER
- EXISTING SANITARY SEWER
- EXISTING GAS MAIN
- EXISTING UNDERGROUND ELECTRIC
- EXISTING OVERHEAD ELECTRIC
- EXISTING UNDERGROUND COMMUNICATIONS
- EXISTING FENCELINE
- GRADING LIMITS
- ASPHALT SAW CUT LINE

TRANS CANADA
ANR PIPELINE COMPANY
EMERGENCY LINE
1-800-447-8066

TO OBTAIN LOCATION OF PARTICIPANTS' UNDERGROUND FACILITIES BEFORE YOU DIG IN WISCONSIN
CALL DIGGERS HOTLINE
1-800-242-8511
TOLL FREE
WIS. STATUTE 182.0175 (1974) REQUIRES MIN. OF 3 WORK DAYS NOTICE BEFORE YOU EXCAVATE

NORTH

0 50 100
SCALE: 1" = 50'

PLAN KEYNOTES:

1. EXISTING CONTOUR
2. EXISTING WETLAND DELINEATION LINE
3. EXISTING TREES TO REMAIN. ALL OTHER TREES WITHIN GRADING LIMITS ARE TO BE REMOVED
4. EXISTING CONCRETE SIDEWALK TO BE CUT AT NEAREST JOINT
5. EXISTING CONCRETE CURB AND CUTTER. CUT AT NEAREST JOINT. TO BE REPLACED WITH CURB & GUTTER.
6. GRADING LIMITS
7. EXISTING ELECTRICAL TO BE REMOVED
8. EXISTING COMMUNICATIONS TO BE REMOVED
9. EXISTING CONCRETE DRIVE APRON TO BE REMOVED. GRADE, SEED AND MULCH.
10. EXISTING HIGH PRESSURE GAS LINE. NO DISTURBANCE EXCEPT DEMOLITION AS SPECIFIED
11. CONTRACTOR SHALL USE EXTREME CAUTION EXCAVATING AND REMOVING OF ASPHALT NEAR HIGH PRESDURE GAS LINE.
12. CONTRACTOR SHALL REMOVE ALL BRUSH AND TREES EXCEPT THOSE SPECIFICALLY NOTED TO REMAIN WITHIN GRADING LIMITS. ALL DISTURBED AREAS FROM VEGETATION REMOVAL SHALL BE GRADED SMOOTH, SEEDED AND MULCHED. SEE LANDSCAPE PLAN FOR SODDED AREAS
13. REMOVE STEEL POSTS AND ALL FOUNDATIONS ASSOCIATED WITH.
14. REMOVE BOULDERS, STONES, TIRES, POND LINERS AND ALL OTHER FOUND MATERIAL AT THIS LOCATION.
15. APPROXIMATE REMNANTS OF HOOP HOUSE, CONTRACTOR SHALL REMOVE ALL STONE, GRAVEL, FOUNDATIONS, CONDUIT, UTILITIES, AND ANY OTHER ITEMS FOUND AT THIS LOCATION
16. EXISTING GAS LINE TO BE REMOVED
17. START AND STOP POINTS FOR MILL AND OVERLAY ON DAIRY DRIVE. DEPTH AND ASPHALT SHALL MATCH CITY OF MADISON PATCHING CRITERIA
18. EXISTING LIGHTPOLE SHALL BE MOVED BY MGE. WORK IS NOT IN CONTRACT AND SHOWN FOR COORDINATION PURPOSES ONLY WITH THE STORM SEWER CONSTRUCTION.

NOTES:

1. EXISTING SURVEY COMPLETED BY OTHERS. THE CONTRACTOR IS RESPONSIBLE FOR EXAMINING ALL EXISTING SITE CONDITIONS PRIOR TO THE START OF CONSTRUCTION.
2. THE CONTRACTOR SHALL VERIFY THE LOCATION OF ALL EXISTING UTILITIES PRIOR TO THE START OF CONSTRUCTION.
3. BEFORE PROCEEDING WITH ANY UTILITY CONSTRUCTION, THE CONTRACTOR SHALL EXCAVATE EACH EXISTING LATERAL OR POINT OF CONNECTION AND VERIFY THE LOCATION AND ELEVATION OF ALL UTILITIES. IF ANY EXISTING UTILITIES ARE NOT AS SHOWN ON THE DRAWINGS, THE CONTRACTOR SHALL NOTIFY THE ENGINEER IMMEDIATELY FOR POSSIBLE REDESIGN.
4. ALL TREES TO BE REMOVED EXCEPT SHOWN.
5. WHEN WORKING IN THE RIGHT OF WAY, CITY OF MADISON PATCHING CRITERIA FOR SIDEWALK, CURB & GUTTER AND PAVEMENT SHALL BE FOLLOWED AT ALL TIMES. CONTRACTOR IS TO ENSURE THAT ALL PERMITS TO WORK WITHIN RIGHT OF WAY ARE OBTAINED PRIOR TO PROJECT START.
6. ALL DEBRIS FOUND ON SITE SHALL BE REMOVED AND PROPERLY DISPOSED OF BY CONTRACTOR.
7. THE EXISTING FEMRITE DRIVE ENTRANCE MAY BE LEFT IN PLACE FOR USE DURING CONSTRUCTION ACTIVITIES.
8. ANY AREAS DISTURBED OUTSIDE OF THE GRADING LIMITS SHALL BE RESTORED TO MATCH THE PRECONSTRUCTION CONDITION AT THE CONTRACTORS EXPENSE.

OPN ARCHITECTS
301 N BROOM STREET #100
MADISON, WI 53703
608-819-0260 PHONE
www.opnarchitects.com
opn@opnarchitects.com

All reports, plans, specifications, computer files, field data, notes and other documents and instruments prepared by OPN Architects, Inc. as instruments of service shall remain the property of OPN Architects, Inc. OPN Architects, Inc. shall retain all common law, statutory and other reserved rights, including the copyright thereto.

© 2017 OPN Architects, Inc.

Owner
City of Madison Fire Department
314 W. Dayton St.
Madison, WI 53703

Project
Madison Fire Station 14
3201 Dairy Drive
Madison, WI 53718

Civil Engineer
Snyder & Associates, Inc
5010 Voges Rd
Madison WI, 53718
P. 608-838-0444

Structural Engineer
IMEG
1800 Deming Way #200
Middleton, WI 53562
P. 608-223-0444

Mechanical Engineer
IMEG
1800 Deming Way #200
Middleton, WI 53562
P. 608-223-0444

Electrical Engineer
IMEG
1800 Deming Way #200
Middleton, WI 53562
P. 608-223-0444

Key Plan

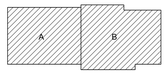

Sheet Issue Date
BID DOCUMENTS 11/03/17

Revision Date

BID DOCUMENTS

Drawing
Demolition Plan

City of Madison Contract No. **8027**
OPN Project No. **17207000**

C101

PRINTED:

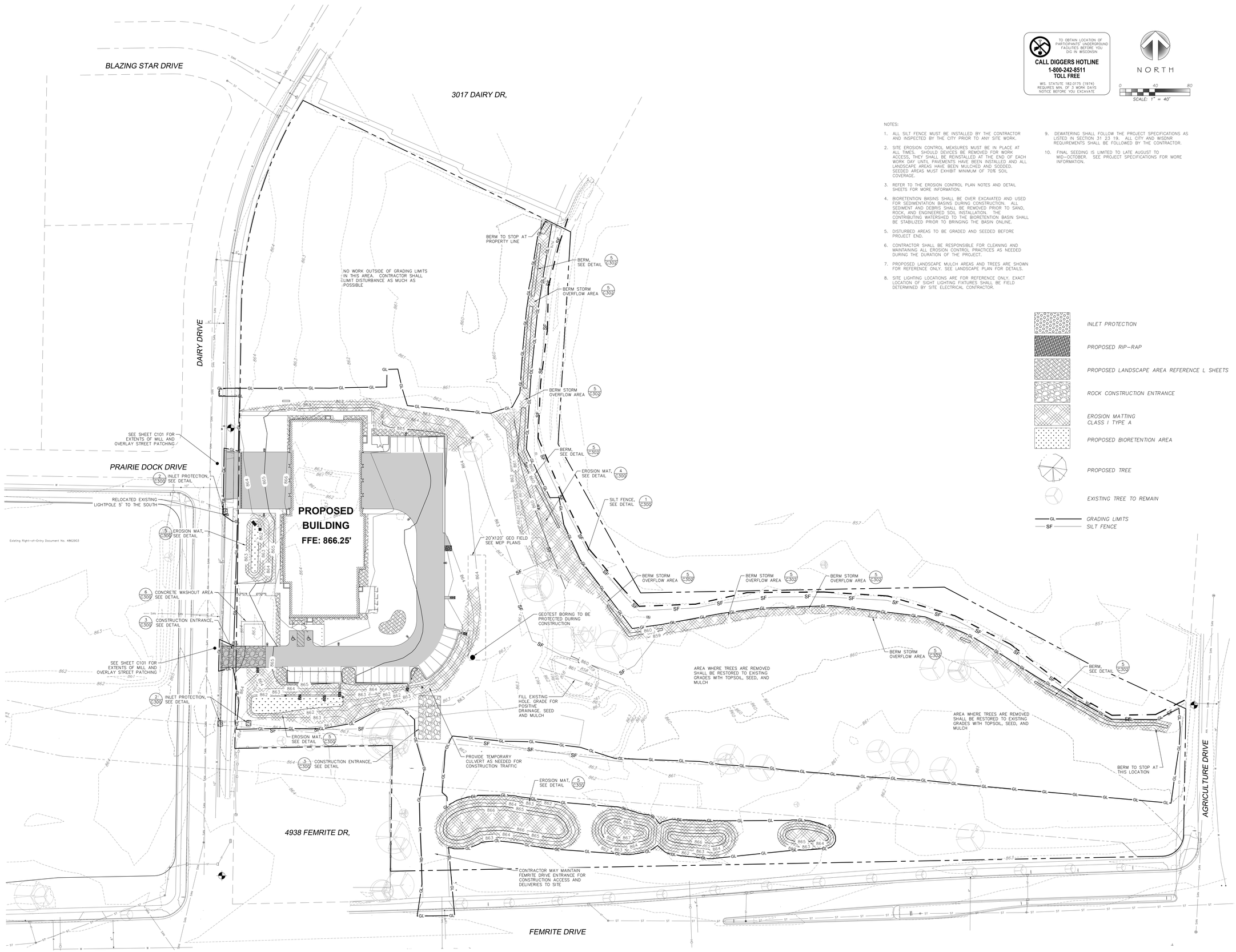

TO OBTAIN LOCATION OF PARTICIPANTS' UNDERGROUND FACILITIES BEFORE YOU DIG IN WISCONSIN

CALL DIGGERS HOTLINE
1-800-242-8511
TOLL FREE

WIS. STATUTE 182.0175 (1974) REQUIRES MIN. OF 3 WORK DAYS NOTICE BEFORE YOU EXCAVATE

NORTH

0 40 80
SCALE: 1" = 40'

NOTES:

1. ALL SILT FENCE MUST BE INSTALLED BY THE CONTRACTOR AND INSPECTED BY THE CITY PRIOR TO ANY SITE WORK.
2. SITE EROSION CONTROL MEASURES MUST BE IN PLACE AT ALL TIMES. SHOULD DEVICES BE REMOVED FOR WORK ACCESS, THEY SHALL BE REINSTALLED AT THE END OF EACH WORK DAY UNTIL PAVEMENTS HAVE BEEN INSTALLED AND ALL LANDSCAPE AREAS HAVE BEEN MULCHED AND SODDED. SEEDED AREAS MUST EXHIBIT MINIMUM OF 70% SOIL COVERAGE.
3. REFER TO THE EROSION CONTROL PLAN NOTES AND DETAIL SHEETS FOR MORE INFORMATION.
4. BIORETENTION BASINS SHALL BE OVER EXCAVATED AND USED FOR SEDIMENTATION BASINS DURING CONSTRUCTION. ALL SEDIMENT AND DEBRIS SHALL BE REMOVED PRIOR TO SAND, ROCK, AND ENGINEERED SOIL INSTALLATION. THE CONTRIBUTING WATERSHED TO THE BIORETENTION BASIN SHALL BE STABILIZED PRIOR TO BRINGING THE BASIN ONLINE.
5. DISTURBED AREAS TO BE GRADED AND SEEDED BEFORE PROJECT END.
6. CONTRACTOR SHALL BE RESPONSIBLE FOR CLEANING AND MAINTAINING ALL EROSION CONTROL PRACTICES AS NEEDED DURING THE DURATION OF THE PROJECT.
7. PROPOSED LANDSCAPE MULCH AREAS AND TREES ARE SHOWN FOR REFERENCE ONLY. SEE LANDSCAPE PLAN FOR DETAILS.
8. SITE LIGHTING LOCATIONS ARE FOR REFERENCE ONLY. EXACT LOCATION OF SIGHT LIGHTING FIXTURES SHALL BE FIELD DETERMINED BY SITE ELECTRICAL CONTRACTOR.
9. DEWATERING SHALL FOLLOW THE PROJECT SPECIFICATIONS AS LISTED IN SECTION 31 23 19. ALL CITY AND WISDNR REQUIREMENTS SHALL BE FOLLOWED BY THE CONTRACTOR.
10. FINAL SEEDING IS LIMITED TO LATE AUGUST TO MID-OCTOBER. SEE PROJECT SPECIFICATIONS FOR MORE INFORMATION.

INLET PROTECTION
PROPOSED RIP-RAP
PROPOSED LANDSCAPE AREA REFERENCE L SHEETS
ROCK CONSTRUCTION ENTRANCE
EROSION MATTING CLASS I TYPE A
PROPOSED BIORETENTION AREA
PROPOSED TREE
EXISTING TREE TO REMAIN
GL — GRADING LIMITS
SF — SILT FENCE

OPN ARCHITECTS
301 N BROOM STREET #100
MADISON, WI 53703
608-819-0260 PHONE
www.opnarchitects.com
opn@opnarchitects.com

All reports, plans, specifications, computer files, field data, notes and other documents and instruments prepared by OPN Architects, Inc. as instruments of service shall remain the property of OPN Architects, Inc. OPN Architects, Inc. shall retain all common law, statutory and other reserved rights, including the copyright thereto.

© 2017 OPN Architects, Inc.

Owner
City of Madison Fire Department
314 W. Dayton St.
Madison, WI 53703

Project
Madison Fire Station 14
3201 Dairy Drive
Madison, WI 53718

Civil Engineer
Snyder & Associates, Inc
5010 Voges Rd
Madison WI, 53718
P. 608-838-0444

Structural Engineer
IMEG
1800 Deming Way #200
Middleton, WI 53562
P. 608-223-0444

Mechanical Engineer
IMEG
1800 Deming Way #200
Middleton, WI 53562
P. 608-223-0444

Electrical Engineer
IMEG
1800 Deming Way #200
Middleton, WI 53562
P. 608-223-0444

Key Plan

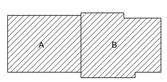

Sheet Issue Date	
BID DOCUMENTS	11/03/17

Revision	Date

BID DOCUMENTS

Drawing
Overall Grading & Erosion Control Plan

City of Madison Contract No. **8027**
OPN Project No. **17207000**

C200

PRINTED:

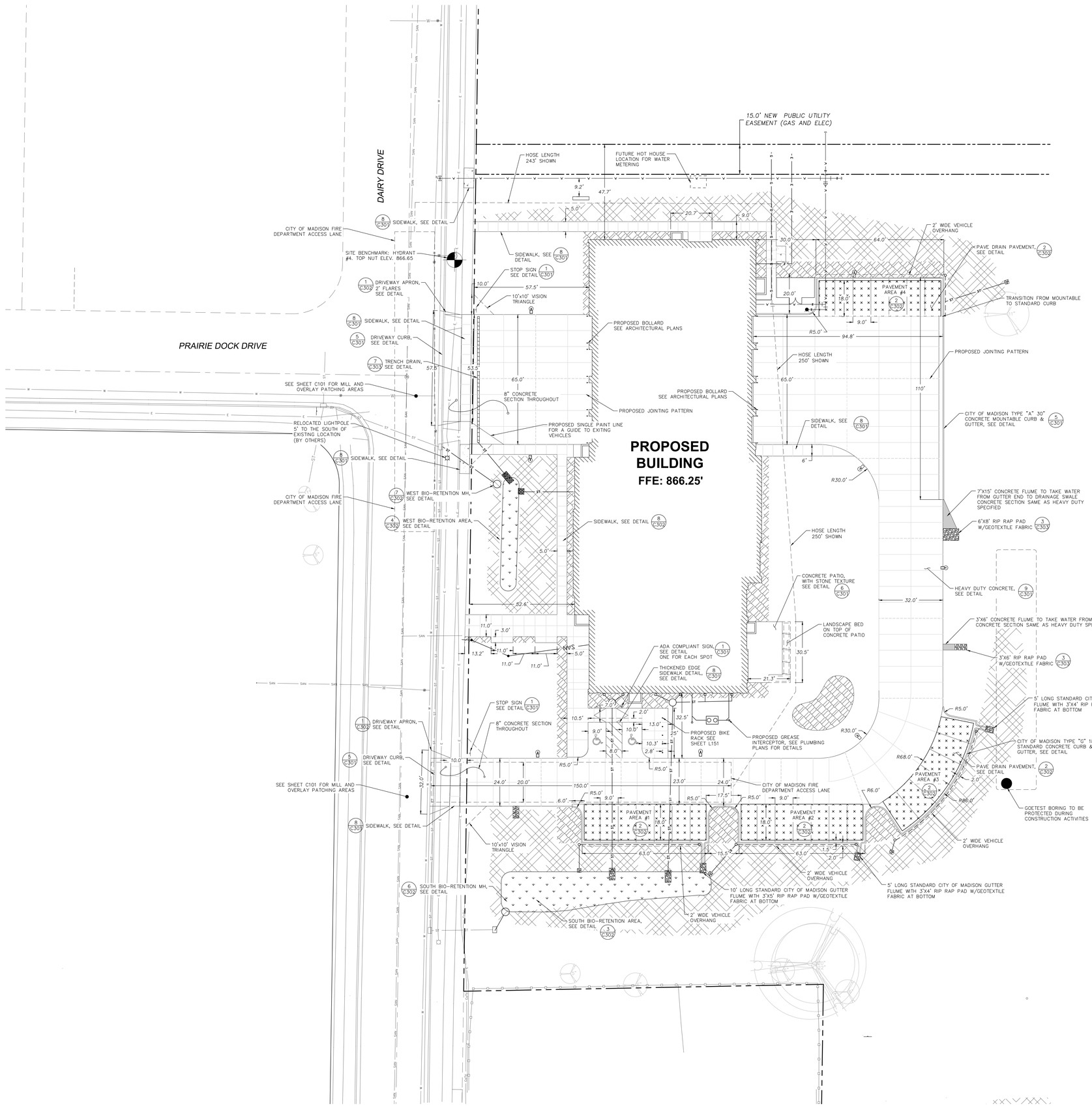

NORTH

0 20 40

SCALE: 1" = 20'

TO OBTAIN LOCATION OF PARTICIPANTS' UNDERGROUND FACILITIES BEFORE YOU DIG IN WISCONSIN

CALL DIGGERS HOTLINE
1-800-242-8511
TOLL FREE

WIS. STATUTE 182.0175 (1974) REQUIRES MIN. OF 3 WORK DAYS NOTICE BEFORE YOU EXCAVATE

LEGEND

- PROPOSED CONCRETE SIDEWALK
- PROPOSED HEAVY DUTY CONCRETE PAVEMENT
- PROPOSED BIORETENTION AREA
- PROPOSED PERMEABLE PAVEMENT
- PROPOSED LANDSCAPE AREA REFERENCE L SHEETS
- PROPOSED BUILDING
- PROPOSED TRENCH DRAIN
- PROPOSED LIGHT POLE LOCATION

NOTES:

1. ALL DIMENSIONS ARE FROM FACE OF CURB TO FACE OF CURB.
2. MADISON FIRE STATION 14
   3201 DAIRY DRIVE
   MADISON WI, 53718
3. WHEN WORKING IN THE RIGHT OF WAY, ALL CITY OF MADISON PATCHING CRITERIA FOR SIDEWALK, CURB & GUTTER AND PAVEMENT SHALL BE FOLLOWED AT ALL TIMES
4. SITE LIGHTING LOCATIONS ARE FOR REFERENCE ONLY. EXACT LOCATION OF SIGHT LIGHTING FIXTURES SHALL BE FIELD DETERMINED BY SITE ELECTRICAL CONTRACTOR.
5. ALL PAVEMENT MARKINGS SHALL BE 4" WIDTH AND YELLOW IN COLOR.
6. THE RIGHT OF WAY IS THE SOLE JURISDICTION OF THE CITY OF MADISON AND IS SUBJECT TO CHANGE AT ANYTIME PER THE RECOMMENDATION/PLAN OF TRAFFIC ENGINEERING AND CITY ENGINEERING DEPARTMENTS.

SITE DATA

ZONING DISTRICT: SE SUBURBAN EMPLOYMENT DISTRICT

TOTAL SITE AREA: 481,950 SF

PRO. IMPERVIOUS: 45,218 SF
PRO. PERMEABLE PAVEMENT 4,558 SF
PROPOSED GREEN AREA: 427,616 SF

PARKING REQUIREMENTS

PARKING PROVIDED = 29
BICYCLE PARKING PROVIDED = 10

PER CODE, FOR 26-50 TOTAL PARKING STALLS
2 HANDICAP PARKING STALLS MUST BE PROVIDED

2 HANDICAP PARKING STALLS ARE SHOWN ON PLAN

BUILDING SETBACKS
FRONT = NONE
REAR = 20'
SIDE YARD = ONE STORY 5'
TWO STORY 6'
MAX LOT COVERAGE = 85%

OPN ARCHITECTS

301 N BROOM STREET #100
MADISON, WI 53703
608-819-0260 PHONE
www.opnarchitects.com
opn@opnarchitects.com

All reports, plans, specifications, computer files, field data, notes and other documents and instruments prepared by OPN Architects, Inc. as instruments of service shall remain the property of OPN Architects, Inc. OPN Architects, Inc. shall retain all common law, statutory and other reserved rights, including the copyright thereto.

© 2017 OPN Architects, Inc.

Owner
City of Madison Fire Department
314 W. Dayton St.
Madison, WI 53703

Project
Madison Fire Station 14
3201 Dairy Drive
Madison, WI 53718

Civil Engineer
Snyder & Associates, Inc
5010 Voges Rd
Madison WI, 53718
P. 608-838-0444

Structural Engineer
IMEG
1800 Deming Way #200
Middleton, WI 53562
P. 608-223-0444

Mechanical Engineer
IMEG
1800 Deming Way #200
Middleton, WI 53562
P. 608-223-0444

Electrical Engineer
IMEG
1800 Deming Way #200
Middleton, WI 53562
P. 608-223-0444

Key Plan

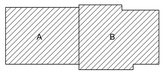

Sheet Issue Date	
BID DOCUMENTS	11/03/17

Revision	Date

BID DOCUMENTS

Drawing
Site Plan

City of Madison Contract No. **8027**
OPN Project No. **17207000**

C201

PRINTED:

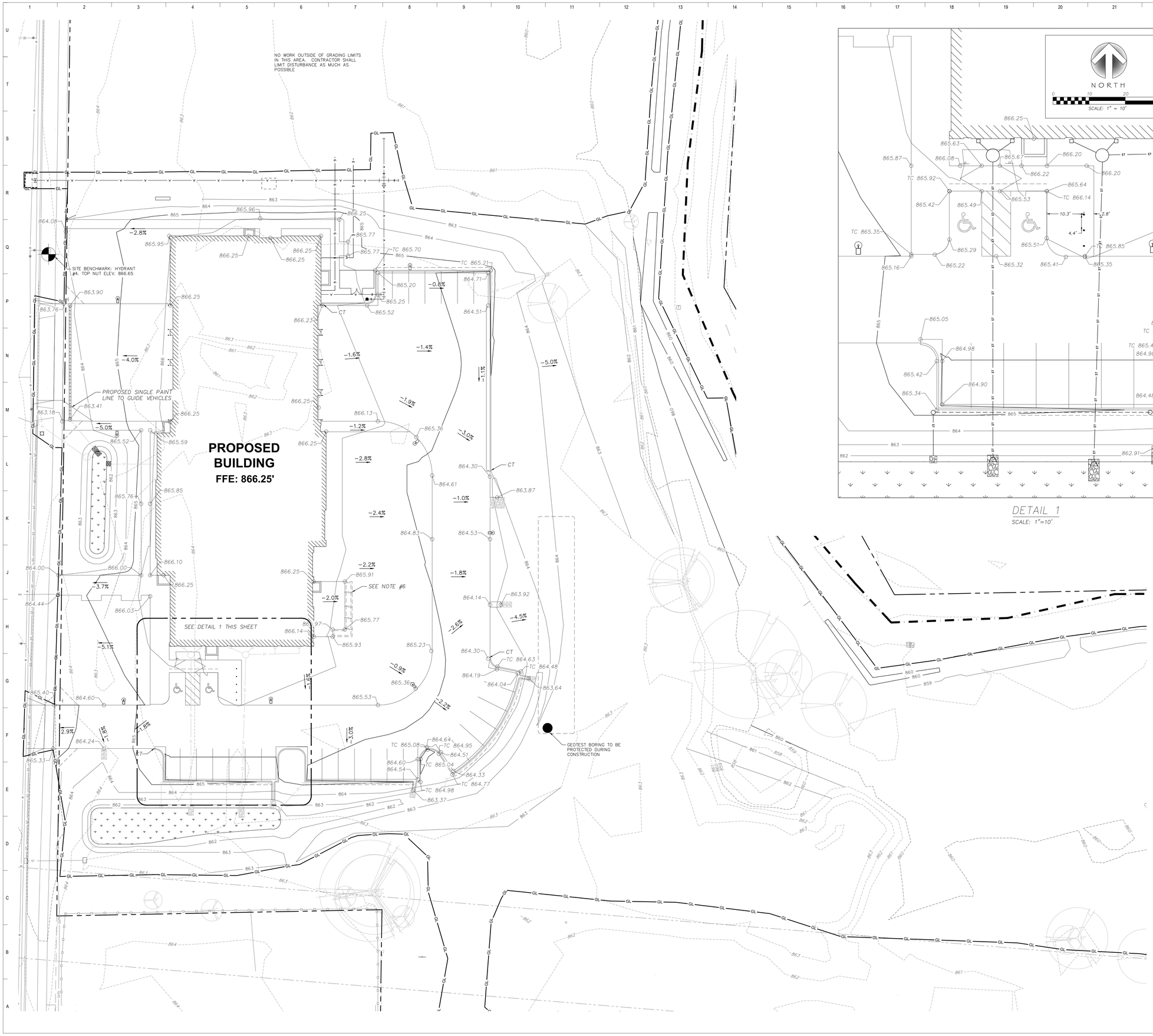

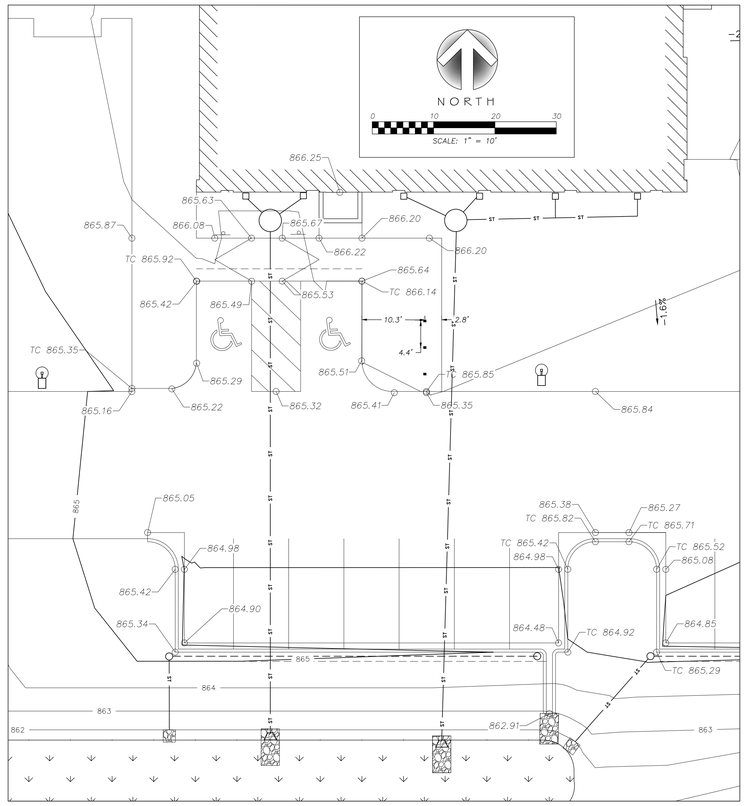

DETAIL 1
SCALE: 1"=10'

NOTES:

1. EXISTING SURVEY COMPLETED BY OTHERS. THE CONTRACTOR IS RESPONSIBLE FOR EXAMINING ALL EXISTING SITE CONDITIONS PRIOR TO THE START OF CONSTRUCTION.
2. THE CONTRACTOR SHALL VERIFY THE LOCATION OF ALL EXISTING UTILITIES PRIOR TO THE START OF CONSTRUCTION.
3. BEFORE PROCEEDING WITH ANY UTILITY CONSTRUCTION, THE CONTRACTOR SHALL EXCAVATE EACH EXISTING LATERAL OR POINT OF CONNECTION AND VERIFY THE LOCATION AND ELEVATION OF ALL UTILITIES. IF ANY EXISTING UTILITIES ARE NOT AS SHOWN ON THE DRAWINGS, THE CONTRACTOR SHALL NOTIFY THE ENGINEER IMMEDIATELY FOR POSSIBLE REDESIGN.
4. MADISON FIRE STATION 14
   3201 DAIRY DRIVE
   MADISON WI, 53718
5. THE RIGHT OF WAY IS THE SOLE JURISDICTION OF THE CITY OF MADISON AND IS SUBJECT TO CHANGE AT ANYTIME PER THE RECOMMENDATION/PLAN OF TRAFFIC ENGINEERING AND CITY ENGINEERING DEPARTMENTS.
6. SEE LANDSCAPE PLANS FOR DETAILS ON DRAINAGE CHANNELS UNDER PLANTER AREA.

LEGEND

999.99	FLOWLINE ELEVATION
TC 999.99	TOP OF CURB ELEVATION
CT	2' CURB TAPER
HP	HIGH POINTS

OPN ARCHITECTS
301 N BROOM STREET #100
MADISON, WI 53703
608-819-0260 PHONE
www.opnarchitects.com
opn@opnarchitects.com

All reports, plans, specifications, computer files, field data, notes and other documents and instruments prepared by OPN Architects, Inc. as instruments of service shall remain the property of OPN Architects, Inc. OPN Architects, Inc. shall retain all common law, statutory and other reserved rights, including the copyright thereto.

© 2017 OPN Architects, Inc.

Owner
City of Madison Fire Department
314 W. Dayton St.
Madison, WI 53703

Project
Madison Fire Station 14
3201 Dairy Drive
Madison, WI 53718

Civil Engineer
Snyder & Associates, Inc
5010 Voges Rd
Madison WI, 53718
P. 608-838-0444

Structural Engineer
IMEG
1800 Deming Way #200
Middleton, WI 53562
P. 608-223-0444

Mechanical Engineer
IMEG
1800 Deming Way #200
Middleton, WI 53562
P. 608-223-0444

Electrical Engineer
IMEG
1800 Deming Way #200
Middleton, WI 53562
P. 608-223-0444

Key Plan

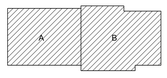

Sheet Issue Date	
BID DOCUMENTS	11/03/17

Revision	Date

BID DOCUMENTS

Drawing
Site Grading Plan

City of Madison Contract No. **8027**
OPN Project No. **17207000**

C202

PRINTED:

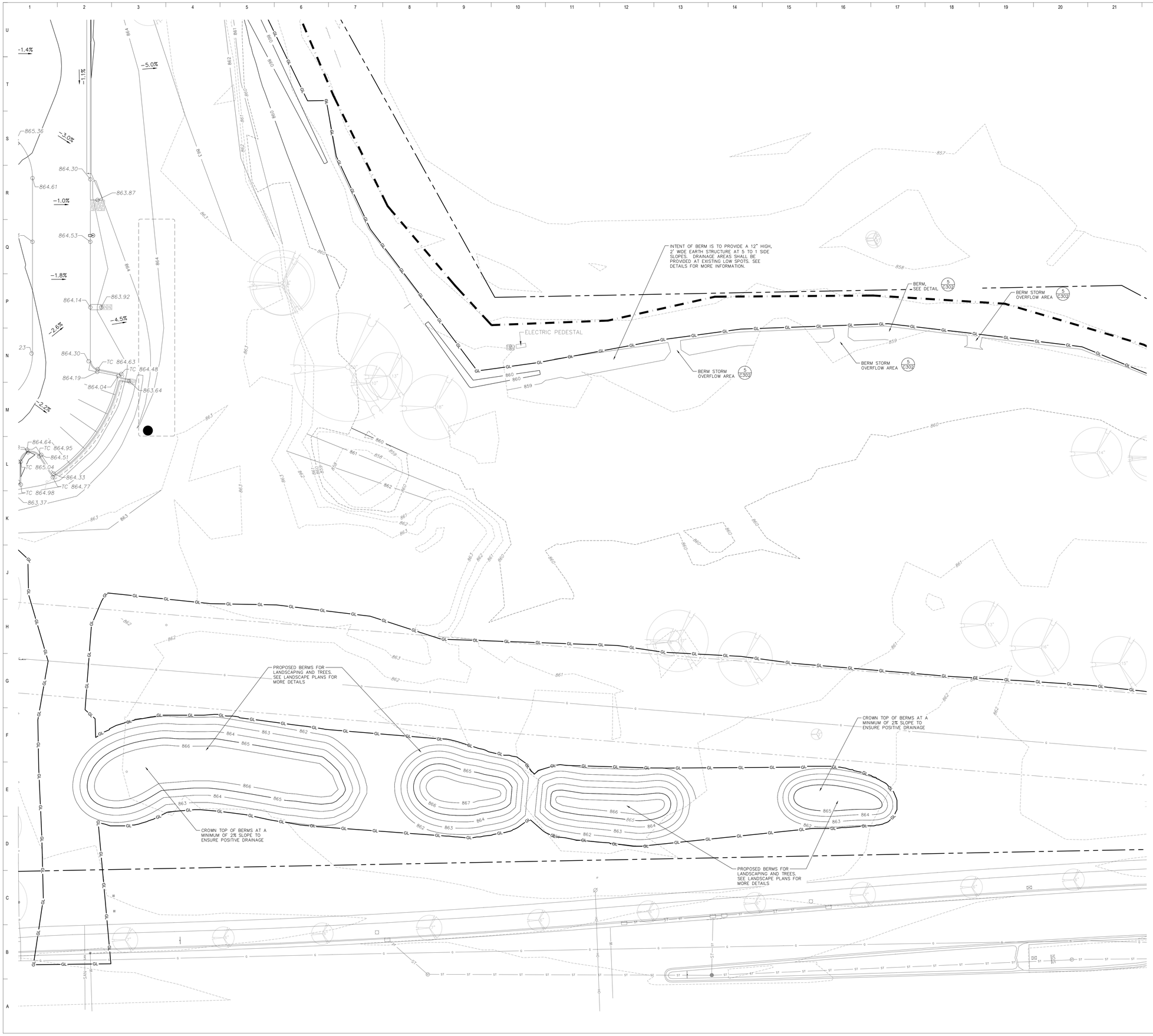

NOTES:

1. EXISTING SURVEY COMPLETED BY OTHERS. THE CONTRACTOR IS RESPONSIBLE FOR EXAMINING ALL EXISTING SITE CONDITIONS PRIOR TO THE START OF CONSTRUCTION.
2. THE CONTRACTOR SHALL VERIFY THE LOCATION OF ALL EXISTING UTILITIES PRIOR TO THE START OF CONSTRUCTION.
3. BEFORE PROCEEDING WITH ANY UTILITY CONSTRUCTION, THE CONTRACTOR SHALL EXCAVATE EACH EXISTING LATERAL OR POINT OF CONNECTION AND VERIFY THE LOCATION AND ELEVATION OF ALL UTILITIES. IF ANY EXISTING UTILITIES ARE NOT AS SHOWN ON THE DRAWINGS, THE CONTRACTOR SHALL NOTIFY THE ENGINEER IMMEDIATELY FOR POSSIBLE REDESIGN.
4. MADISON FIRE STATION 14
   3201 DAIRY DRIVE
   MADISON WI, 53718

LEGEND

999.99	FLOWLINE ELEVATION
TC 999.99	TOP OF CURB ELEVATION
CT	2' CURB TAPER
HP	HIGH POINTS

NORTH

0 20 40

SCALE: 1" = 20'

OPN ARCHITECTS

301 N BROOM STREET #100
MADISON, WI 53703
608-819-0260 PHONE
www.opnarchitects.com
opn@opnarchitects.com

All reports, plans, specifications, computer files, field data, notes and other documents and instruments prepared by OPN Architects, Inc. as instruments of service shall remain the property of OPN Architects, Inc. OPN Architects, Inc. shall retain all common law, statutory and other reserved rights, including the copyright thereto.

© 2017 OPN Architects, Inc.

Owner

City of Madison Fire Department

314 W. Dayton St.
Madison, WI 53703

Project

Madison Fire Station 14

3201 Dairy Drive
Madison, WI 53718

Civil Engineer

Snyder & Associates, Inc

5010 Voges Rd
Madison WI, 53718
P. 608-838-0444

Structural Engineer

IMEG

1800 Deming Way #200
Middleton, WI 53562
P. 608-223-0444

Mechanical Engineer

IMEG

1800 Deming Way #200
Middleton, WI 53562
P. 608-223-0444

Electrical Engineer

IMEG

1800 Deming Way #200
Middleton, WI 53562
P. 608-223-0444

Key Plan

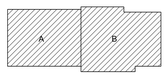

Sheet Issue Date

BID DOCUMENTS 11/03/17

Revision Date

BID DOCUMENTS

Drawing

Site Grading Plan

City of Madison Contract No. **8027**
OPN Project No. **17207000**

C203

PRINTED:

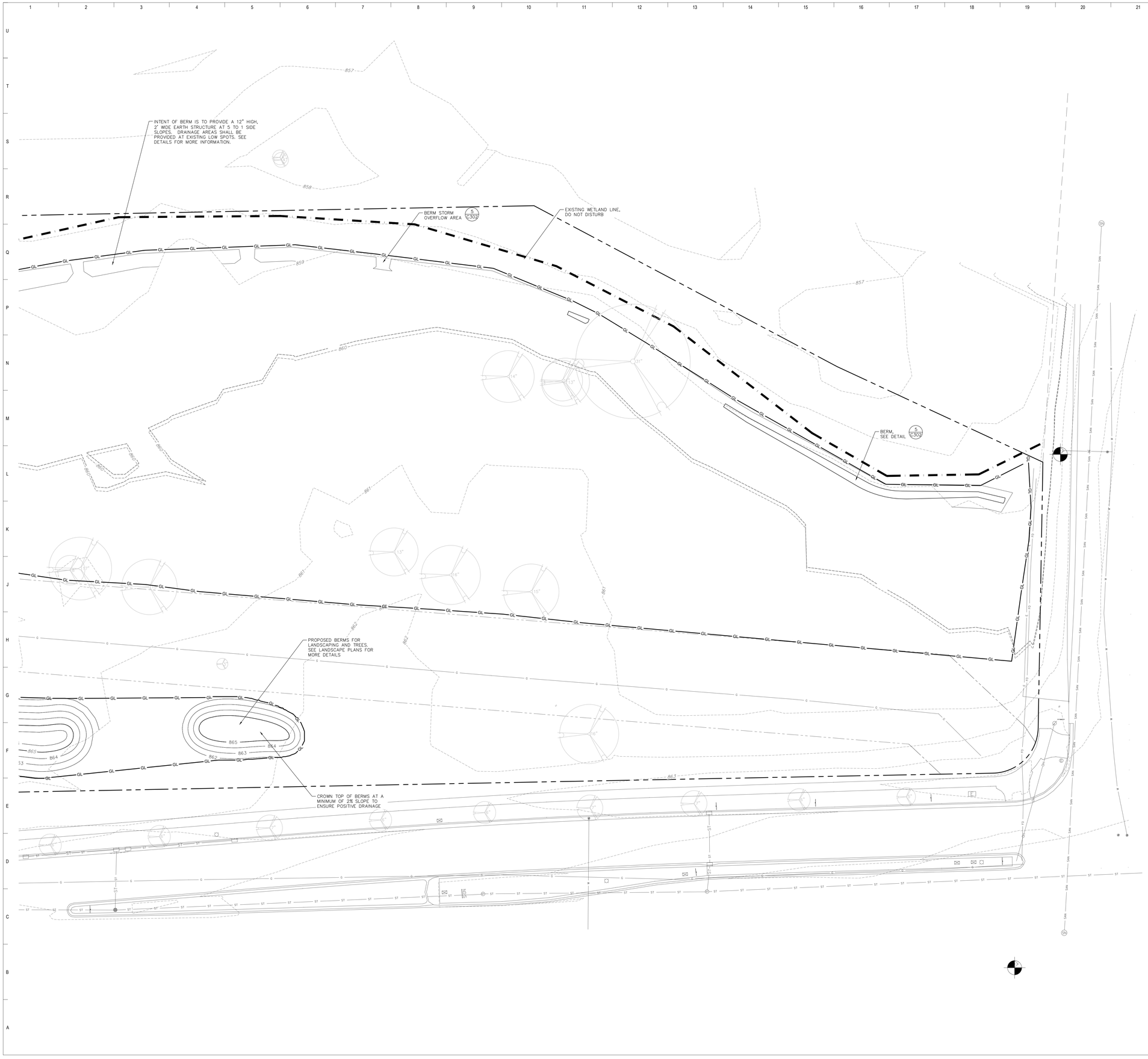

NOTES:

1. *EXISTING SURVEY COMPLETED BY OTHERS. THE CONTRACTOR IS RESPONSIBLE FOR EXAMINING ALL EXISTING SITE CONDITIONS PRIOR TO THE START OF CONSTRUCTION.*
2. *THE CONTRACTOR SHALL VERIFY THE LOCATION OF ALL EXISTING UTILITIES PRIOR TO THE START OF CONSTRUCTION.*
3. *BEFORE PROCEEDING WITH ANY UTILITY CONSTRUCTION, THE CONTRACTOR SHALL EXCAVATE EACH EXISTING LATERAL OR POINT OF CONNECTION AND VERIFY THE LOCATION AND ELEVATION OF ALL UTILITIES. IF ANY EXISTING UTILITIES ARE NOT AS SHOWN ON THE DRAWINGS, THE CONTRACTOR SHALL NOTIFY THE ENGINEER IMMEDIATELY FOR POSSIBLE REDESIGN.*
4. *MADISON FIRE STATION 14*
   3201 DAIRY DRIVE
   MADISON WI, 53718

LEGEND

999.99	*FLOWLINE ELEVATION*
TC 999.99	*TOP OF CURB ELEVATION*
CT	*2' CURB TAPER*
HP	*HIGH POINTS*

OPN ARCHITECTS

301 N BROOM STREET #100
MADISON, WI 53703
608-819-0260 PHONE
www.opnarchitects.com
opn@opnarchitects.com

All reports, plans, specifications, computer files, field data, notes and other documents and instruments prepared by OPN Architects, Inc. as instruments of service shall remain the property of OPN Architects, Inc. OPN Architects, Inc. shall retain all common law, statutory and other reserved rights, including the copyright thereto.

© 2017 OPN Architects, Inc.

Owner

City of Madison Fire Department

314 W. Dayton St.
Madison, WI 53703

Project

Madison Fire Station 14

3201 Dairy Drive
Madison, WI 53718

Civil Engineer

Snyder & Associates, Inc

5010 Voges Rd
Madison WI, 53718
P. 608-838-0444

Structural Engineer

IMEG

1800 Deming Way #200
Middleton, WI 53562
P. 608-223-0444

Mechanical Engineer

IMEG

1800 Deming Way #200
Middleton, WI 53562
P. 608-223-0444

Electrical Engineer

IMEG

1800 Deming Way #200
Middleton, WI 53562
P. 608-223-0444

Key Plan

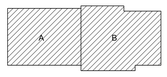

Sheet Issue Date

BID DOCUMENTS 11/03/17

Revision Date

BID DOCUMENTS

Drawing

Site Grading Plan

City of Madison Contract No. **8027**
OPN Project No. **17207000**

C204

PRINTED:

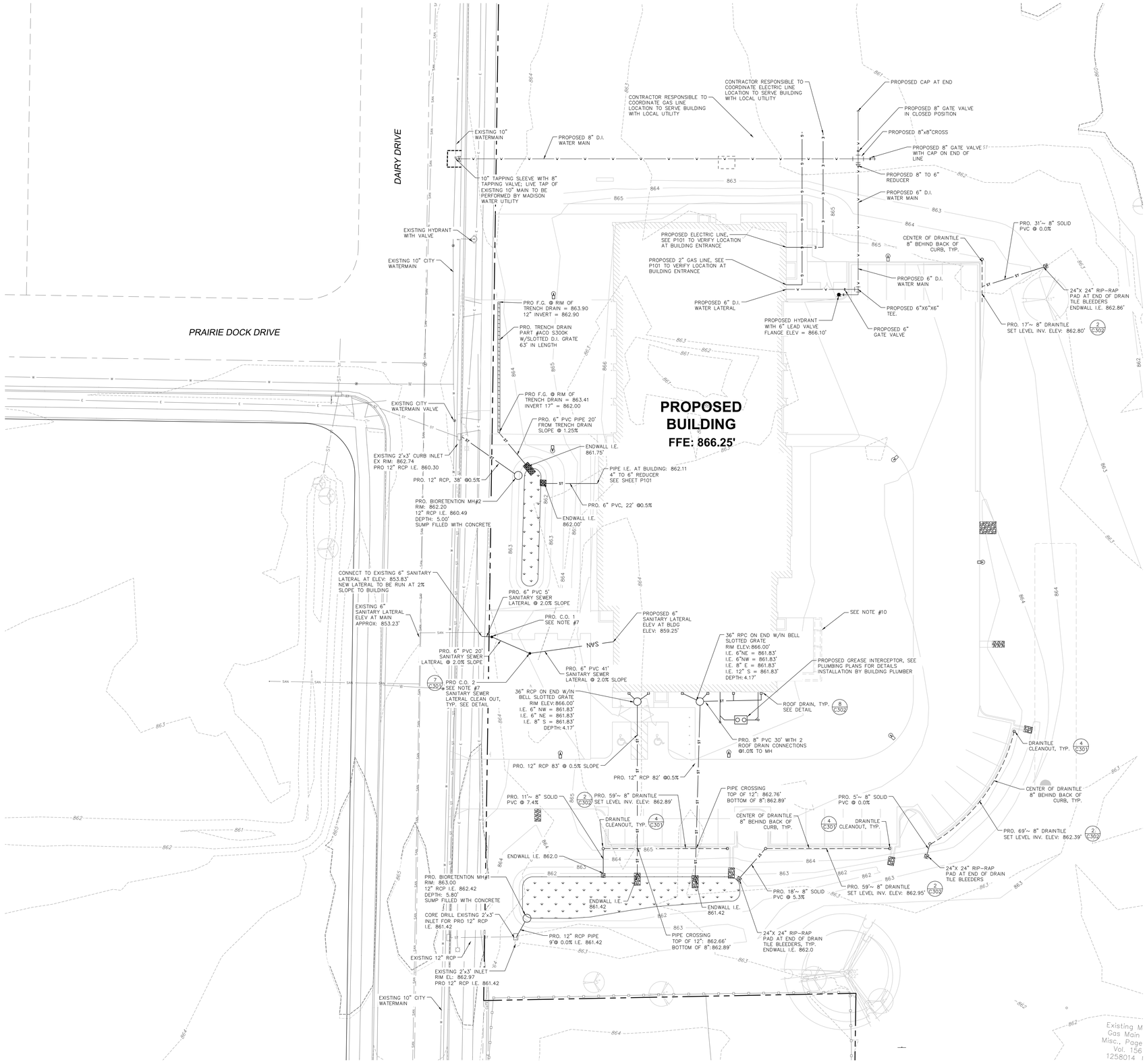

NOTES

1. EXISTING SURVEY COMPLETED BY OTHERS. THE CONTRACTOR IS RESPONSIBLE FOR EXAMINING ALL EXISTING SITE CONDITIONS PRIOR TO THE START OF CONSTRUCTION.
2. THE CONTRACTOR SHALL VERIFY THE LOCATION OF ALL EXISTING UTILITIES PRIOR TO THE START OF CONSTRUCTION.
3. BEFORE PROCEEDING WITH ANY UTILITY CONSTRUCTION, THE CONTRACTOR SHALL EXCAVATE EACH EXISTING LATERAL OR POINT OF CONNECTION AND VERIFY THE LOCATION AND ELEVATION OF ALL UTILITIES. IF ANY EXISTING UTILITIES ARE NOT AS SHOWN ON THE DRAWINGS, THE CONTRACTOR SHALL NOTIFY THE ENGINEER IMMEDIATELY FOR POSSIBLE REDESIGN.
4. MADISON FIRE STATION 14
   3201 DAIRY DRIVE
   MADISON WI, 53718
5. WATER HYDRANTS ON SITE SHALL BE TYPE "MUELLER SUPER CENTURION A423 OR WATEROUS PACER WB-67." SEE PROJECT SPECIFICATIONS FOR DETAILS.
6. PROPOSED ELECTRIC AND GAS SERVICE LINES SHOWN ARE APPROXIMATE AND SHOULD BE FIELD VERIFIED BY THE CONTRACTOR AND UTILITY COMPANY THAT IS PROVIDING THE SERVICE.
7. CLEANOUT #1
   RIM 864.15'
   E INV: 853.93'
   W INV: 858.03'
   DEPTH: 10.22'

   CLEANOUT #2
   RIM 864.92'
   E INV: 858.43'
   W INV: 858.43'
   DEPTH: 6.50'
8. ROOF DRAIN CONNECTORS THAT DIRECTLY CONNECT TO DOWNSPOUTS SHALL BE MINIMUM 6" PVC AT 1.0% SLOPE. SEE DETAIL 8 ON SHEET C302 FOR MORE INFORMATION.
9. THE RIGHT OF WAY IS THE SOLE JURISDICTION OF THE CITY OF MADISON AND IS SUBJECT TO CHANGE AT ANYTIME PER THE RECOMMENDATION/PLAN OF TRAFFIC ENGINEERING AND CITY ENGINEERING DEPARTMENTS.
10. SEE LANDSCAPE PLAN FOR DETAILS ON DRAINAGE CHANNELS THAT CONVEY WATER THROUGH RAISED PLANTER.
11. DEWATERING SHALL FOLLOW THE PROJECT SPECIFICATIONS AS LISTED IN SECTION 31 23 19. ALL CITY AND WISDNR REQUIREMENTS SHALL BE FOLLOWED BY THE CONTRACTOR.

NORTH

0 20 40
SCALE: 1" = 20'

OPN ARCHITECTS

301 N BROOM STREET #100
MADISON, WI 53703
608-819-0260 PHONE
www.opnarchitects.com
opn@opnarchitects.com

All reports, plans, specifications, computer files, field data, notes and other documents and instruments prepared by OPN Architects, Inc. as instruments of service shall remain the property of OPN Architects, Inc. OPN Architects, Inc. shall retain all common law, statutory and other reserved rights, including the copyright thereto.

© 2017 OPN Architects, Inc.

Owner
City of Madison Fire Department
314 W. Dayton St.
Madison, WI 53703

Project
Madison Fire Station 14
3201 Dairy Drive
Madison, WI 53718

Civil Engineer
Snyder & Associates, Inc
5010 Voges Rd
Madison WI, 53718
P. 608-838-0444

Structural Engineer
IMEG
1800 Deming Way #200
Middleton, WI 53562
P. 608-223-0444

Mechanical Engineer
IMEG
1800 Deming Way #200
Middleton, WI 53562
P. 608-223-0444

Electrical Engineer
IMEG
1800 Deming Way #200
Middleton, WI 53562
P. 608-223-0444

Key Plan

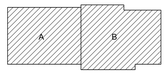

Sheet Issue Date	
BID DOCUMENTS	11/03/17

Revision	Date

BID DOCUMENTS

Drawing
Utility Plan

City of Madison Contract No. **8027**
OPN Project No. **17207000**

C205

PRINTED:

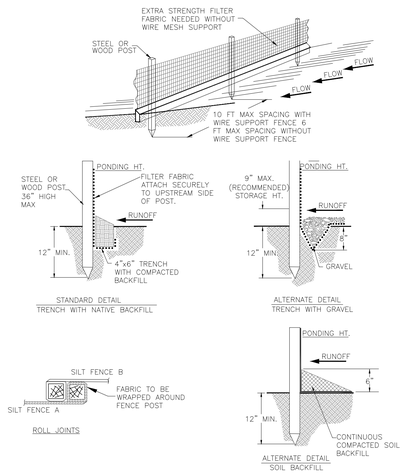

1 C300 SILT FENCE INSTALLATION DETAILS

NOT TO SCALE

SILT FENCE NOTES

THE HEIGHT OF A SILT FENCE SHALL NOT EXCEED 36 INCHES. STORAGE HEIGHT SHALL NEVER EXCEED 18".

THE FENCE LINE SHALL FOLLOW THE CONTOUR AS CLOSELY AS POSSIBLE.

IF POSSIBLE, THE FILTER FABRIC SHALL BE CUT FROM A CONTINUOUS ROLL TO AVOID THE USE OF JOINTS. WHEN JOINTS ARE NECESSARY, FILTER CLOTH SHALL BE SPLICED ONLY AT A SUPPORT POST, WITH A MINIMUM 6-INCH OVERLAP AND BOTH ENDS SECURELY FASTENED TO THE POST.

POSTS SHALL BE SPACED A MAXIMUM OF 10 FEET APART AND DRIVEN SECURELY INTO THE GROUND (MINIMUM OF 12 INCHES). WHEN EXTRA STRENGTH FABRIC IS USED WITHOUT THE WIRE SUPPORT FENCE, POST SPACING SHALL NOT EXCEED 6 FEET.

THE ENDS OF THE FENCE SHALL BE TURNED UPHILL.

A TRENCH SHALL BE EXCAVATED APPROXIMATELY 4 INCHES WIDE AND 6 INCHES DEEP ALONG THE LINE OF POSTS AND UPSLOPE FROM THE BARRIER.

WHEN STANDARD-STRENGTH FILTER FABRIC IS USED, A WIRE MESH SUPPORT FENCE SHALL BE FASTENED SECURELY TO THE UPSLOPE SIDE OF THE POSTS USING HEAVY DUTY WIRE STAPLES AT LEAST 1 INCH LONG, TIE WIRES OR HOG RINGS. THE WIRE SHALL EXTEND INTO THE TRENCH A MINIMUM OF 2 INCHES AND SHALL NOT EXTEND MORE THAN 36 INCHES ABOVE THE ORIGINAL GROUND SURFACE.

THE STANDARD-STRENGTH FILTER FABRIC SHALL BE STAPLED OR WIRED TO THE FENCE, AND 6 INCHES OF THE FABRIC SHALL EXTEND INTO THE TRENCH. THE FABRIC SHALL NOT EXTEND MORE THAN 36 INCHES ABOVE THE ORIGINAL GROUND SURFACE. FILTER FABRIC SHALL NOT BE STAPLED TO EXISTING TREES.

WHEN EXTRA-STRENGTH FILTER FABRIC AND CLOSER POST SPACING ARE USED, THE WIRE MESH SUPPORT FENCE MAY BE ELIMINATED. IN SUCH A CASE, THE FILTER FABRIC IS STAPLED OR WIRED DIRECTLY TO THE POSTS.

THE TRENCH SHALL BE BACKFILLED AND/OR THE SOIL COMPACTED OVER THE TOE OF THE FILTER FABRIC. THE FILTER FABRIC SHALL NOT BE SECURED BY SAND BAGS.

SILT FENCES PLACED AT THE TOE OF A SLOPE SHALL BE SET AT LEAST 6 FEET FROM THE TOE IN ORDER TO INCREASE PONDING VOLUME.

SILT FENCES SHALL BE REMOVED WHEN THEY HAVE SERVED THEIR USEFUL PURPOSE, BUT NOT BEFORE THE UPSLOPE AREA HAS BEEN PERMANENTLY STABILIZED, AND ANY SEDIMENT STORED BEHIND THE SILT FENCE HAS BEEN REMOVED.

INSPECTION AND MAINTENANCE

SILT FENCES AND FILTER BARRIERS SHALL BE INSPECTED WEEKLY AND AFTER EACH SIGNIFICANT STORM (1" IN 24 HR.). ANY REQUIRED REPAIRS SHALL BE MADE IMMEDIATELY.

SEDIMENT SHALL BE REMOVED WHEN IT REACHES 1/3 HEIGHT OF THE FENCE OR 9 INCHES MAXIMUM.

THE REMOVED SEDIMENT SHALL BE VEGETATED OR OTHERWISE STABILIZED.

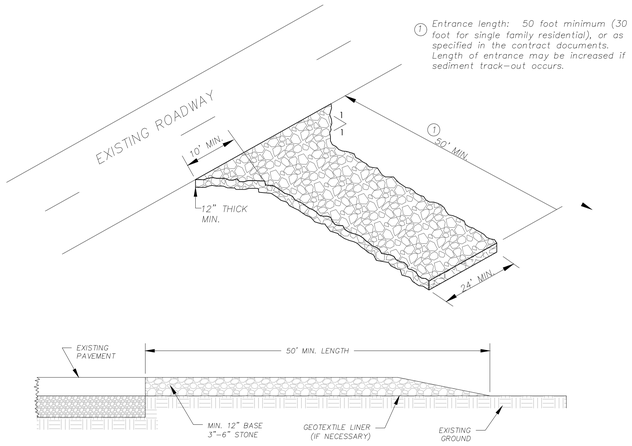

NOTE: MAINTAIN THE ROCK ENTRANCE TO PREVENT TRACKING ONTO PAVEMENT

3 C300 ROCK CONSTRUCTION ENTRANCE DETAIL

NOT TO SCALE

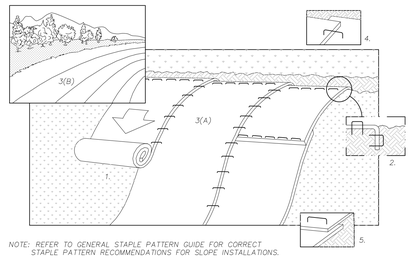

NOTE: REFER TO GENERAL STAPLE PATTERN GUIDE FOR CORRECT STAPLE PATTERN RECOMMENDATIONS FOR SLOPE INSTALLATIONS.

1. PREPARE SOIL BEFORE INSTALLING BLANKETS, INCLUDING APPLICATION OF FERTILIZER AND SEED. NOTE: WHEN USING CELL-O-SEED DO NOT SEED PREPARED AREA. CELL-O-SEED MUST BE INSTALLED WITH PAPER SIDE DOWN.
2. BEGIN AT THE TOP OF THE SLOPE BY ANCHORING THE BLANKET IN 6" DEEP X 6" WIDE TRENCH. BACKFILL AND COMPACT THE TRENCH AFTER STAPLING.
3. ROLL THE BLANKETS (A.) DOWN OR (B.) HORIZONTALLY ACROSS THE SLOPE.
4. THE EDGES OF PARALLEL BLANKETS MUST BE STAPLED WITH APPROXIMATELY 2" OVERLAP.
5. WHEN BLANKETS MUST BE SPLICED DOWN THE SLOPE, PLACE BLANKETS END OVER END (SHINGLE STYLE) WITH APPROXIMATELY 4" OVERLAP. STAPLE THROUGH OVERLAPPED AREA, APPROXIMATELY 12" APART.
6. ALL BLANKETS MUST BE SECURELY FASTENED TO THE SLOPE BY PLACING STAPLES/STAKES IN APPROPRIATE LOCATIONS AS RECOMMENDED BY THE MANUFACTURER.

4 C300 EROSION CONTROL MAT-SLOPE INSTALLATION

NOT TO SCALE

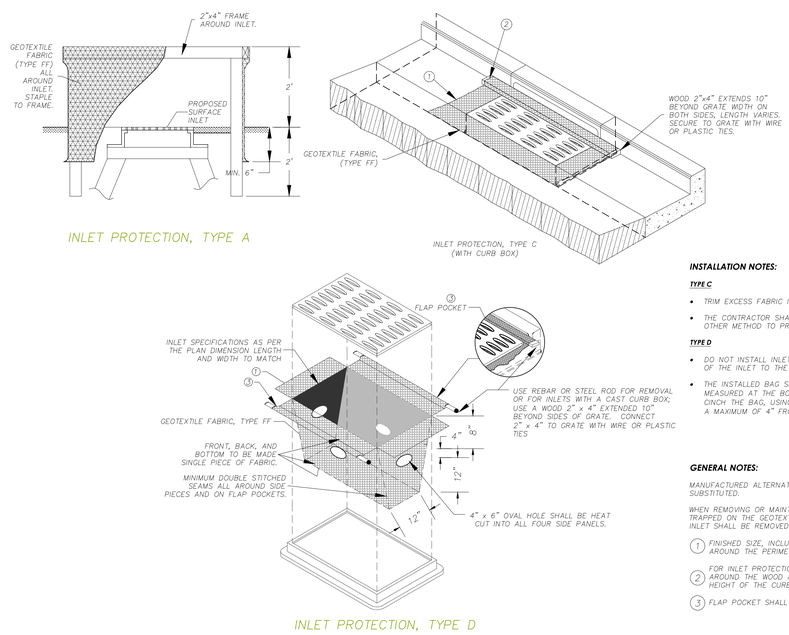

INSTALLATION NOTES:

TYPE C

- TRIM EXCESS FABRIC IN THE FLOW LINE TO WITHIN 3" OF THE GRATE.
- THE CONTRACTOR SHALL DEMONSTRATE A METHOD OF MAINTENANCE, USING A SEWN FLAP, HAND HOLDS OR OTHER METHOD TO PREVENT ACCUMULATED SEDIMENT FROM ENTERING THE INLET.

TYPE D

- DO NOT INSTALL INLET PROTECTION TYPE D IN INLETS SHALLOWER THAN 30", MEASURED FROM THE BOTTOM OF THE INLET TO THE TOP OF THE GRATE.
- THE INSTALLED BAG SHALL HAVE A MINIMUM SIDE CLEARANCE, BETWEEN THE INLET WALLS AND THE BAG, MEASURED AT THE BOTTOM OF THE OVERFLOW HOLES, OF 3". WHERE NECESSARY THE CONTRACTOR SHALL CINCH THE BAG, USING PLASTIC ZIP TIES, TO ACHIEVE THE 3" CLEARANCE. THE TIES SHALL BE PLACED AT A MAXIMUM OF 4" FROM THE BOTTOM OF THE BAG.

GENERAL NOTES:

MANUFACTURED ALTERNATIVES APPROVED AND LISTED ON WIS DOT PRODUCT ACCEPTABILITY LIST MAY BE SUBSTITUTED.

WHEN REMOVING OR MAINTAINING INLET PROTECTION, ARE SHALL BE TAKEN SO THAT THE SEDIMENT TRAPPED ON THE GEOTEXTILE FABRIC DOES NOT FALL INTO THE INLET. ANY MATERIAL FALLING INTO THE INLET SHALL BE REMOVED IMMEDIATELY.

1 FINISHED SIZE, INCLUDING FLAP POCKETS WHERE REQUIRED SHALL EXTEND A MINIMUM OF 10" AROUND THE PERIMETER TO FACILITATE MAINTENANCE OR REMOVAL.

2 FOR INLET PROTECTION, TYPE C (WITH CURB BOX), AN ADDITIONAL 18" OF FABRIC IS WRAPPED AROUND THE WOOD AND SECURED WITH STAPLES. THE WOOD SHALL NOT BLOCK THE ENTIRE HEIGHT OF THE CURB BOX OPENING.

3 FLAP POCKET SHALL BE LARGE ENOUGH TO ACCEPT A WOOD 2" x 4".

2 C300 STORM WATER INLET PROTECTION

NOT TO SCALE

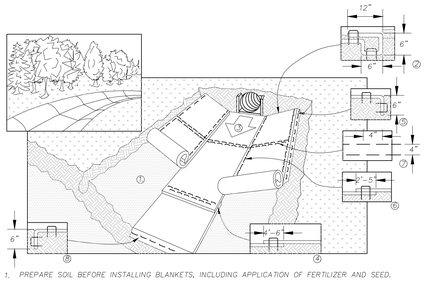

1. PREPARE SOIL BEFORE INSTALLING BLANKETS, INCLUDING APPLICATION OF FERTILIZER AND SEED.
2. BEGIN AT THE TOP OF THE CHANNEL BY ANCHORING THE BLANKET IN A 6" DEEP X 6" WIDE TRENCH WITH APPROXIMATELY 12" OF BLANKET EXTENDED BEYOND THE UP-SLOPE PORTION OF THE TRENCH. ANCHOR THE BLANKET WITH A ROW OF STAPLES/STAKES APPROXIMATELY 12" APART IN THE BOTTOM OF THE TRENCH. BACKFILL AND COMPACT THE TRENCH AFTER STAPLING. APPLY SEED TO COMPACTED SOIL AND FOLD REMAINING 12" PORTION OF BLANKET BACK OVER SEED AND COMPACTED SOIL. SECURE BLANKET OVER COMPACTED SOIL WITH A ROW OF STAPLES/STAKES SPACED APPROXIMATELY 12" APART ACROSS THE WIDTH OF THE BLANKET
3. ROLL CENTER BLANKET IN DIRECTION OF WATER FLOW IN BOTTOM OF CHANNEL. BLANKETS WILL UNROLL WITH APPROPRIATE SIDE AGAINST THE SOIL SURFACE. ALL BLANKETS MUST BE SECURELY FASTENED TO THE SOIL SURFACE BY PLACING STAPLES/STAKES IN APPROPRIATE LOCATIONS AS RECOMMENDED BY THE MANUFACTURER.
4. PLACE CONSECUTIVE BLANKETS END OVER END (SHINGLE STYLE) WITH A 4-6" OVERLAP. USE A DOUBLE ROW OF STAPLES STAGGERED 4" APART AND 4" ON CENTER TO SECURE BLANKETS.
5. FULL LENGTH EDGE OF BLANKETS AT TOP OF SIDE SLOPE MUST BE ANCHORED WITH A ROW OF STAPLES/STAKES APPROXIMATELY 12" APART IN A 6" DEEP X 6" WIDE TRENCH. BACKFILL AND COMPACT THE TRENCH AFTER STAPLING.
6. ADJACENT BLANKETS MUST BE OVERLAPPED APPROXIMATELY 4" AND STAPLED.
7. A STAPLE CHECK SLOT IS RECOMMENDED AT 30 TO 40 FOOT INTERVALS. USE A DOUBLE ROW OF STAPLES STAGGERED 4" APART AND 4" ON CENTER OVER ENTIRE WIDTH OF THE CHANNEL.
8. THE TERMINAL END OF THE BLANKETS MUST BE ANCHORED WITH A ROW OF STAPLES/STAKES APPROXIMATELY 12" APART IN A 6" DEEP X 6" WIDE TRENCH. BACKFILL AND COMPACT THE TRENCH AFTER STAPLING.

NOTE: IN LOOSE SOIL CONDITIONS, THE USE OF STAPLES OR STAKE LENGTHS GREATER THAN 6" MAY BE NECESSARY TO PROPERLY ANCHOR THE BLANKETS.

5 C300 EROSION CONTROL MAT-CHANNEL INSTALLATION

NOT TO SCALE

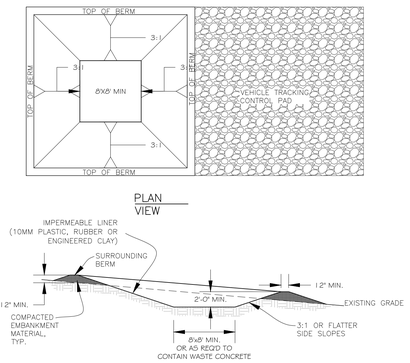

CONCRETE WASHOUT AREA INSTALLATION NOTES

1. SEE EROSION CONTROL PLAN FOR LOCATIONS OF CONCRETE WASHOUT AREA(S). TO BE PLACED A MIN. OF 50' FROM DRAINAGEWAYS, BODIES OF WATER, AND INLETS.)
2. THE CONCRETE WASHOUT AREA(S) SHALL BE INSTALLED PRIOR TO ANY CONCRETE PLACEMENT ON SITE.
3. VEHICLE TRACKING CONTROL PAD IS REQ'D AT THE ACCESS POINT(S).
4. SIGNS SHALL BE PLACED AT THE CONSTRUCTION ENTRANCE, AT THE WASHOUT AREA(S), AND ELSEWHERE AS NECESSARY TO CLEARLY INDICATE THE LOCATION OF THE CONCRETE WASHOUT AREAS TO OPERATORS OF CONCRETE TRUCKS AND PUMP RIGS.
5. EXCAVATED MATERIAL SHALL BE UTILIZED IN PERIMETER BERM CONSTRUCTION.

CONCRETE WASHOUT AREA MAINTENANCE NOTES

6. THE CONCRETE WASHOUT AREA SHALL BE REPAIRED AND ENLARGED OR CLEANED OUT AS NECESSARY TO MAINTAIN CAPACITY FOR WASTED CONCRETE
7. AT THE END OF CONSTRUCTION, ALL CONCRETE SHALL BE REMOVED FROM SITE AND DISPOSED OF AT AN APPROVED WASTE SITE.
8. WHEN CONCRETE WASHOUT AREA(S) IS REMOVED, THE DISTURBED AREA SHALL BE STABILIZED PER SITE EROSION CONTROL MEASURES.
9. INSPECT WEEKLY AND DURING AND AFTER ALL STORM EVENTS. CLEAN-OUT OR COVER WASHOUT AREA PRIOR TO PREDICTED STORM EVENTS TO PREVENT OVER-FLOW.

6 C300 CONCRETE WASHOUT AREA

NOT TO SCALE

OPN ARCHITECTS

301 N BROOM STREET #100
MADISON, WI 53703
608-819-0260 PHONE
www.opnarchitects.com
opn@opnarchitects.com

All reports, plans, specifications, computer files, field data, notes and other documents and instruments prepared by OPN Architects, Inc. as instruments of service shall remain the property of OPN Architects, Inc. OPN Architects, Inc. shall retain all common law, statutory and other reserved rights, including the copyright thereto.

© 2017 OPN Architects, Inc.

Owner

City of Madison Fire Department

314 W. Dayton St.
Madison, WI 53703

Project

Madison Fire Station 14

3201 Dairy Drive
Madison, WI 53718

Civil Engineer

Snyder & Associates, Inc

5010 Voges Rd
Madison WI, 53718
P. 608-838-0444

Structural Engineer

IMEG

1800 Deming Way #200
Middleton, WI 53562
P. 608-223-0444

Mechanical Engineer

IMEG

1800 Deming Way #200
Middleton, WI 53562
P. 608-223-0444

Electrical Engineer

IMEG

1800 Deming Way #200
Middleton, WI 53562
P. 608-223-0444

Key Plan

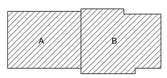

Sheet Issue Date	
BID DOCUMENTS	11/03/17

Revision	Date

BID DOCUMENTS

Drawing

Erosion Control Details

City of Madison Contract No. **8027**
OPN Project No. **17207000**

C300

PRINTED:

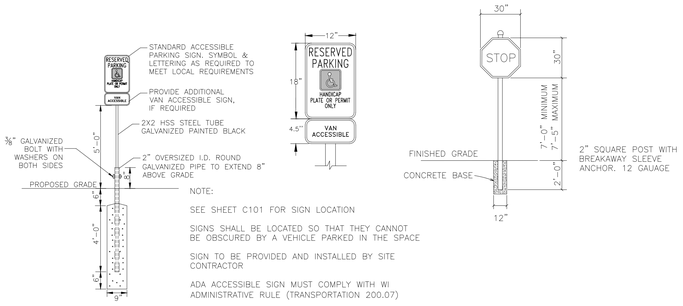

NOTE:

SEE SHEET C101 FOR SIGN LOCATION

SIGNS SHALL BE LOCATED SO THAT THEY CANNOT BE OBSCURED BY A VEHICLE PARKED IN THE SPACE

SIGN TO BE PROVIDED AND INSTALLED BY SITE CONTRACTOR

ADA ACCESSIBLE SIGN MUST COMPLY WITH WI ADMINISTRATIVE RULE (TRANSPORTATION 200.07)

1 / C301 SIGNAGE DETAILS
NOT TO SCALE

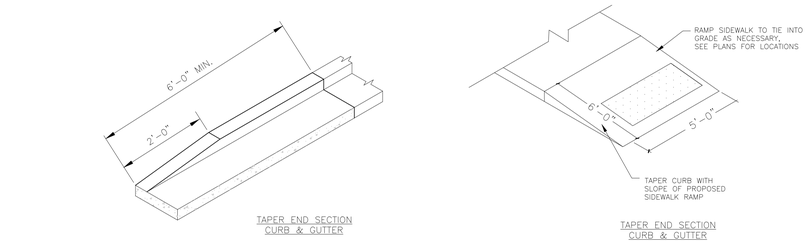

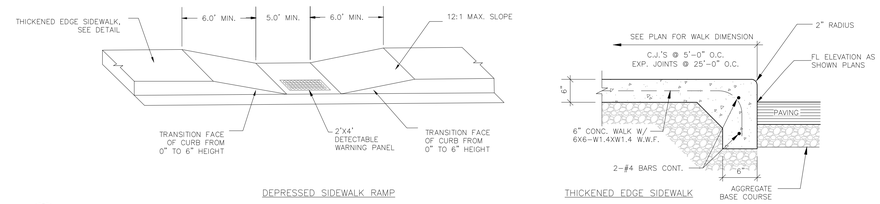

3 / C301 SIDEWALK DETAILS

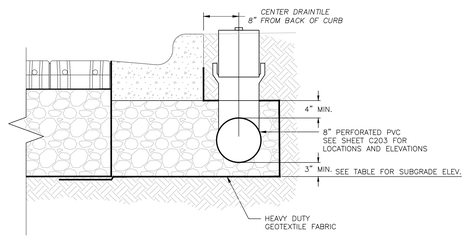

NOTE:

1. SEE DETAIL #2 SHEET C302 FOR CONCRETE PAVEMENT SECTION DETAILS

4 / C301 STORM SEWER CLEANOUTS DETAIL
NOT TO SCALE

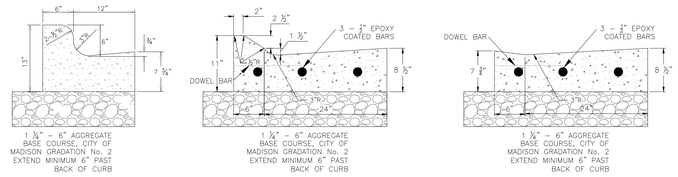

NOTES:

LATERAL CONTRACTION JOINTS SHALL BE PLACED AT INTERVALS OF NOT MORE THAN 15' NOR LESS THAN 6' IN LENGTH. THE JOINTS SHALL BE A MINIMUM OF 3" IN DEPTH EXPANSION JOINTS SHALL BE PLACED TRANSVERSELY AT RADIUS POINTS ON CURVES OF RADIUS 200' OR LESS, AND AT ANGLE POINTS, OR AS DIRECTED BY THE ENGINEER.

THE EXPANSION JOINT SHALL BE A ONE PIECE ASPHALTIC MATERIAL HAVING THE SAME DIMENSIONS AS CURB & GUTTER AT THAT STATION AND BE 1/2" THICK. IN ALL CASES, CONCRETE CURB & GUTTER SHALL BE PLACED ON THOROUGHLY COMPACTED CRUSHED STONE THAT IS 6" THICK.

IN ALL CASES, CONCRETE CURB & GUTTER SHALL BE PLACED ON 6" OF THOROUGHLY COMPACTED AGGREGATE BASE COURSE (MADISON GRADTION NO.2).

5 / C301 CONCRETE CURB AND GUTTER
NOT TO SCALE

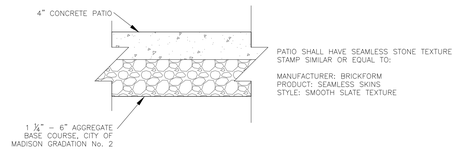

6 / C301 PATIO DETAIL
NOT TO SCALE

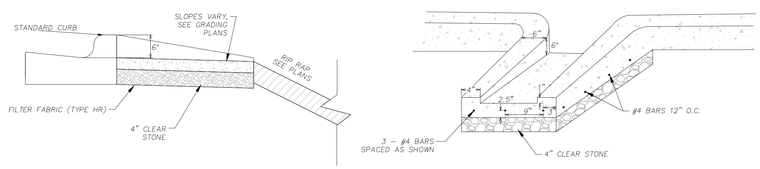

10 / C301 STORMWATER FLUME
NOT TO SCALE

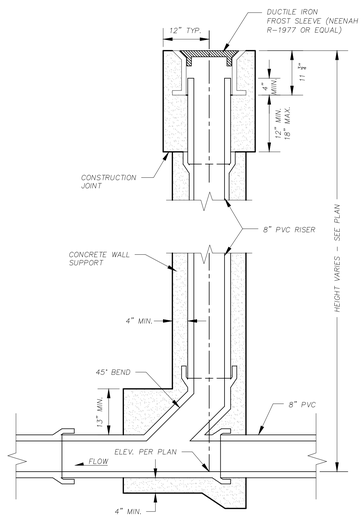

7 / C301 SANITARY SEWER CLEANOUT DETAIL
NOT TO SCALE

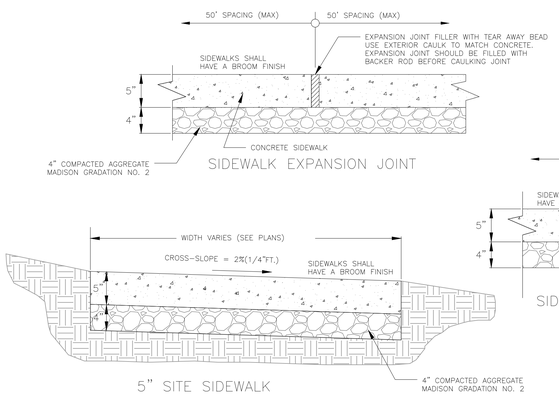

8 / C301 5" SIDEWALK
NOT TO SCALE

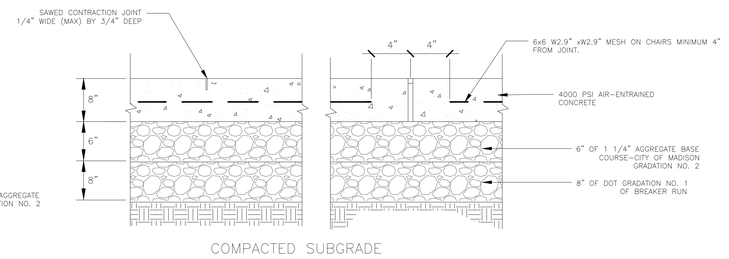

NOTE:
PROVIDE #4 – 8" DOWEL CONNECTION BETWEEN ADJACENT SLABS AT 12" O.C. EPOXY-COATED.

9 / C301 HEAVY DUTY CONCRETE
NOT TO SCALE

OPN ARCHITECTS
301 N BROOM STREET #100
MADISON, WI 53703
608-819-0260 PHONE
www.opnarchitects.com
opn@opnarchitects.com

All reports, plans, specifications, computer files, field data, notes and other documents and instruments prepared by OPN Architects, Inc. as instruments of service shall remain the property of OPN Architects, Inc. OPN Architects, Inc. shall retain all common law, statutory and other reserved rights, including the copyright thereto.

© 2017 OPN Architects, Inc.

Owner
City of Madison Fire Department
314 W. Dayton St.
Madison, WI 53703

Project
Madison Fire Station 14
3201 Dairy Drive
Madison, WI 53718

Civil Engineer
Snyder & Associates, Inc
5010 Voges Rd
Madison WI, 53718
P. 608-838-0444

Structural Engineer
IMEG
1800 Deming Way #200
Middleton, WI 53562
P. 608-223-0444

Mechanical Engineer
IMEG
1800 Deming Way #200
Middleton, WI 53562
P. 608-223-0444

Electrical Engineer
IMEG
1800 Deming Way #200
Middleton, WI 53562
P. 608-223-0444

Key Plan

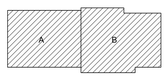

Sheet Issue Date
BID DOCUMENTS 11/03/17

Revision Date

BID DOCUMENTS

Drawing
Plan Details

City of Madison Contract No. **8027**
OPN Project No. **17207000**

C301

PRINTED:

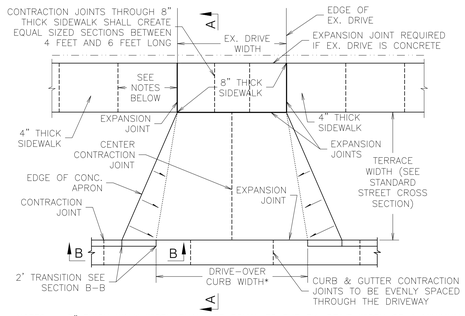

NOTES: – 8" THICK WALK WIDTH SHALL BE EQUAL TO THE EX. DRIVE WIDTH OR A MINIMUM OF 12' CENTERED ON THE EX. DRIVE. THE DRIVE-OVER CURB WIDTH SHALL BE EQUAL TO THE 8" THICK WALK WIDTH PLUS 2', CENTERED ON THE EX. DRIVE.

– CONTRACTION JOINTS IN 4" THICK SIDEWALKS SHALL BE PLACED EVERY 5'. EXPANSION JOINTS SHALL BE PLACED AT INTERVALS NOT TO EXCEED 96 FEET.

PLAN VIEW

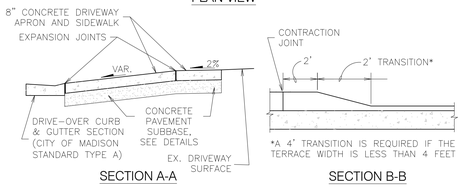

SECTION A-A SECTION B-B

1 C302 DRIVEWAY ENTRANCE DETAIL
NOT TO SCALE

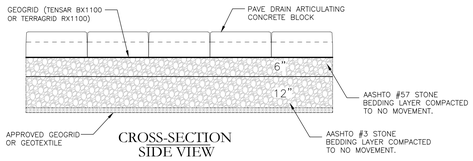

CROSS-SECTION SIDE VIEW

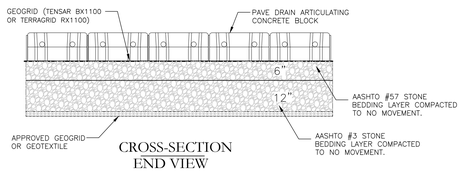

CROSS-SECTION END VIEW

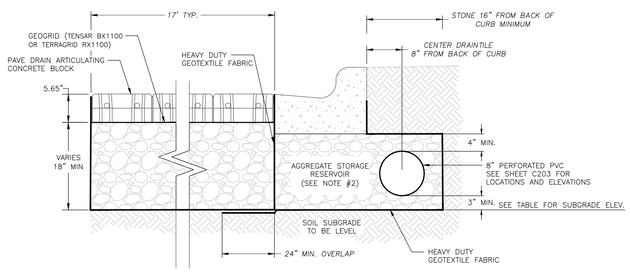

PAVE DRAIN PAVEMENT

PAVEMENT AREAS		
AREA #	SUBGRADE ELEV.	DRAINTILE I.E.
#1	862.64	862.89
#2	862.70	862.95
#3	862.14	862.39
#4	862.16	862.86

NOTES:

1. PAVEMENT SURFACE PERCENT VOIDS SHALL BE LESS THAN 25%.
2. PAVER BEDDING COURSE SHALL CONSIST OF 6" of AASHTO #57 AND 12" OF ASSHTO #3 AGGREGATE BASE COURSES.
3. AGGREGATE STORAGE RESERVOIR DEPTH SHALL BE A MINIMUM OF 18 INCHES.

2 C302 PERMEABLE PAVEMENT DETAIL
NOT TO SCALE

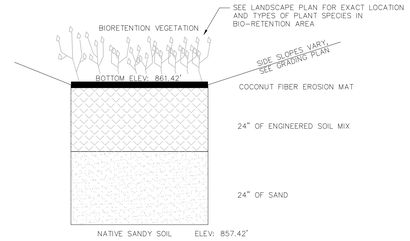

3 C302 SOUTH BIORETENTION PROFILE
NOT TO SCALE

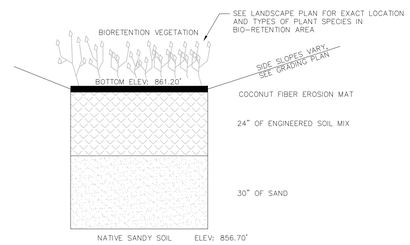

4 C302 WEST BIORETENTION PROFILE
NOT TO SCALE

SECTION A-A

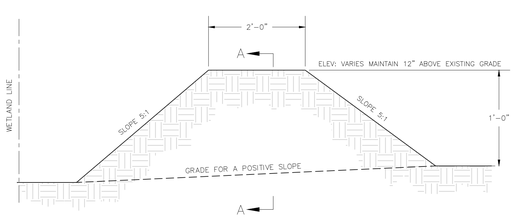

5 C302 BERM DETAIL
NOT TO SCALE

BIORETENTION NOTES

1. BIORETENTION SHALL CONFORM TO WIS. DNR TECH STANDARD 1004.
2. ENGINEERED SOIL SHALL CONSIST OF 70%-85% SILICA SAND AND 15%-30% COMPOST WITH A PH OF 5.5-6.5
3. BIORETENTION BASINS SHALL BE EXCAVATED AND USED AS SEDIMENT TRAPS DURING CONSTRUCTION. UPON COMPLETION OF CONSTRUCTION AND SITE STABILIZATION, THE BASINS SHALL BE OVER-EXCAVATED 3 FEET MINIMUM AND THEN THE SAND LAYER AND ENGINEERED SOIL SHALL BE PLACED TO WITHIN THREE INCHES OF FINAL GRADE. ONCE THE ENGINEERED SOIL IS PLACED, THREE INCHES OF HARDWOOD MULCH SHALL BE ADDED ON TOP OF THE ENGINEERED SOIL.
4. SPECIFIC SPECIES OR CONTAINER SIZE SUGGESTED SUBSTITUTIONS SHALL BE PRESENTED TO CONSULTANT ALONG WITH THE REASONS FOR THE SUGGESTIONS. WITH CONSULTANT OR PROJECT ENGINEER'S APPROVAL, SUBSTITUTIONS MAY BE MADE. IF SUBSTITUTIONS ARE MADE, CONTRACT PRICES MAY NEED TO BE ADJUSTED ACCORDINGLY.
5. LIVE PLANTS CAN BE PLANTED IN THE FIELD DURING THE GROWING SEASON FROM MAY 1 THROUGH OCTOBER 15. ANY SUGGESTED PLANTING TIMES NOT IN THIS WINDOW SHALL BE APPROVED BY CONSULTANT OR ENGINEER. IF PLANTING OCCURS OUTSIDE OF THIS WINDOW ADDITIONAL MEASURES MAY NEED TO BE TAKEN (I.E. MULCH) TO ENSURE PLANT SURVIVAL. IN THESE INSTANCES, THE CONTRACT PRICE MAY NEED TO BE ADJUSTED ACCORDINGLY.
6. ALL PLANTED MATERIALS WILL BE WARRANTED BY INSTALLATION CONTRACTOR TO BE IN HEALTHY CONDITION WITH A REPLACEMENT GUARANTEE FOR A PERIOD OF TWO YEARS FROM THE DATE OF PLANTING.
7. SEE LANDSCAPE PLAN FOR LOCATION, SPACING, AND TYPE OF PLANTS FOR BIO-RETENTION AREAS.

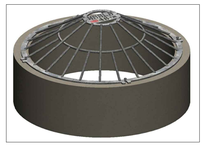

TRASH RACK
(HAALA INDUSTRIES INC)

NOTES:

1. TRASH GRATE TO BE BOLTED TO STRUCTURE
2. GRATE SHALL BE PAINTED OR COATED PER CITY OF MADISON STANDARD SPECIFICATIONS 506.2(b).
3. LEVEL SPREADER SHALL BE 12'X'2'X2' WITH TOP ELEVATION AT 884.85'. ROCK SHALL CONSIST OF 2"-3" CLEAR STONE, BOTTOM SHALL BE WRAPPED IN GEOTEXTILE FABRIC.

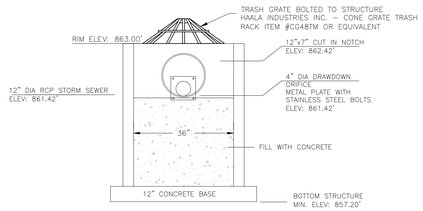

SOUTH BIORETENTION

6 C302 SOUTH BIORETENTION OVERFLOW MH#1
NOT TO SCALE

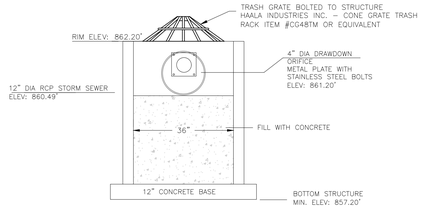

WEST BIORETENTION

7 C302 WEST BIORETENTION OVERFLOW MH#2
NOT TO SCALE

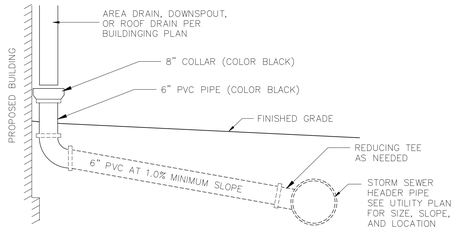

8 C302 ROOF DRAIN CONNECTION DETAIL
NOT TO SCALE

OPN ARCHITECTS

301 N BROOM STREET #100
MADISON, WI 53703
608-819-0260 PHONE
www.opnarchitects.com
opn@opnarchitects.com

All reports, plans, specifications, computer files, field data, notes and other documents and instruments prepared by OPN Architects, Inc. as instruments of service shall remain the property of OPN Architects, Inc. OPN Architects, Inc. shall retain all common law, statutory and other reserved rights, including the copyright thereto.

© 2017 OPN Architects, Inc.

Owner
City of Madison Fire Department
314 W. Dayton St.
Madison, WI 53703

Project
Madison Fire Station 14
3201 Dairy Drive
Madison, WI 53718

Civil Engineer
Snyder & Associates, Inc
5010 Voges Rd
Madison WI, 53718
P. 608-838-0444

Structural Engineer
IMEG
1800 Deming Way #200
Middleton, WI 53562
P. 608-223-0444

Mechanical Engineer
IMEG
1800 Deming Way #200
Middleton, WI 53562
P. 608-223-0444

Electrical Engineer
IMEG
1800 Deming Way #200
Middleton, WI 53562
P. 608-223-0444

Key Plan

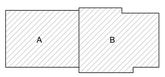

Sheet Issue Date
BID DOCUMENTS 11/03/17

Revision Date

BID DOCUMENTS

Drawing
Plan Details

City of Madison Contract No. **8027**
OPN Project No. **17207000**

C302

PRINTED:

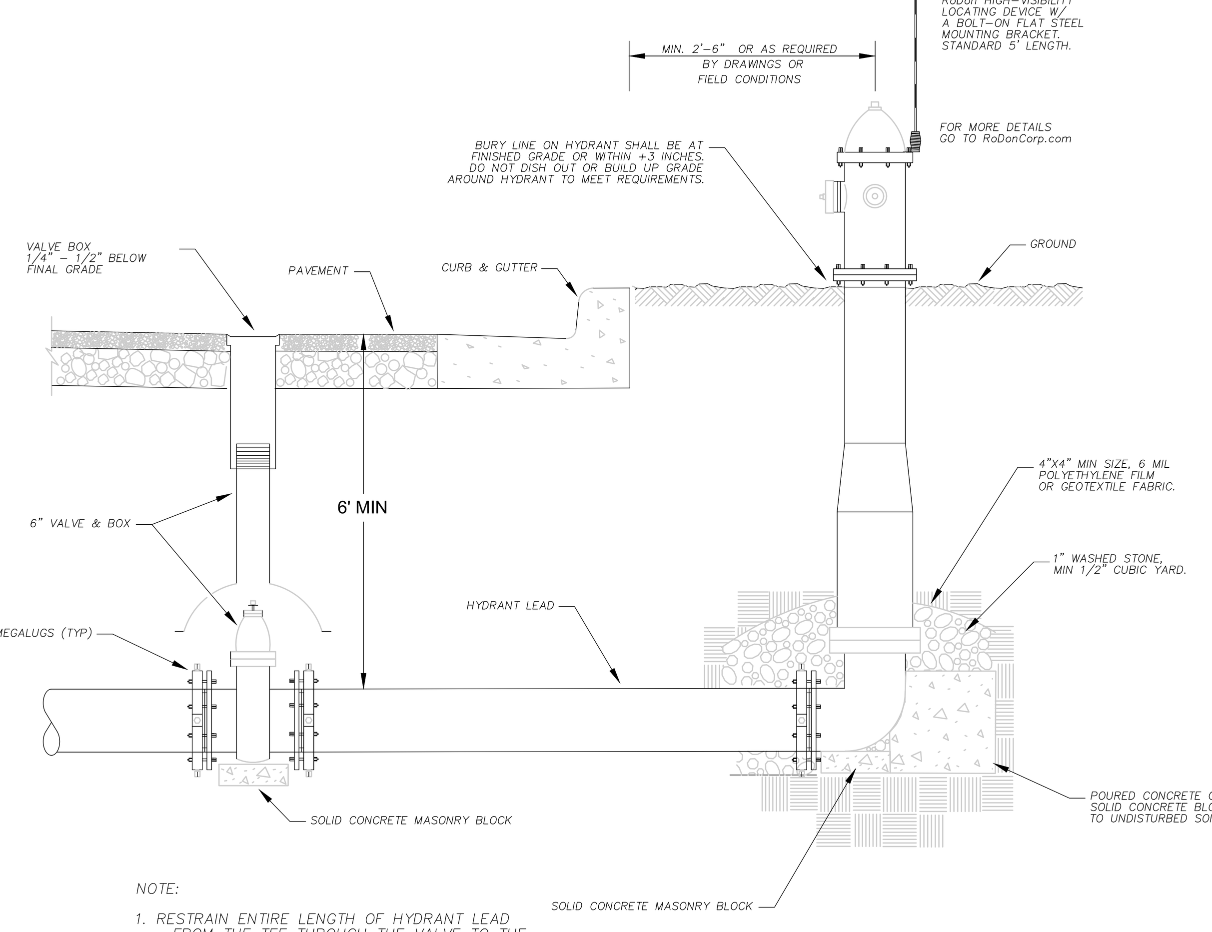

NOTE:

1. RESTRAIN ENTIRE LENGTH OF HYDRANT LEAD FROM THE TEE THROUGH THE VALVE TO THE HYDRANT AS SPECIFIED USING JOINT RESTRAINTS PER SECTION 703.10

1 / C303 STANDARD HYDRANT DETAIL
NOT TO SCALE

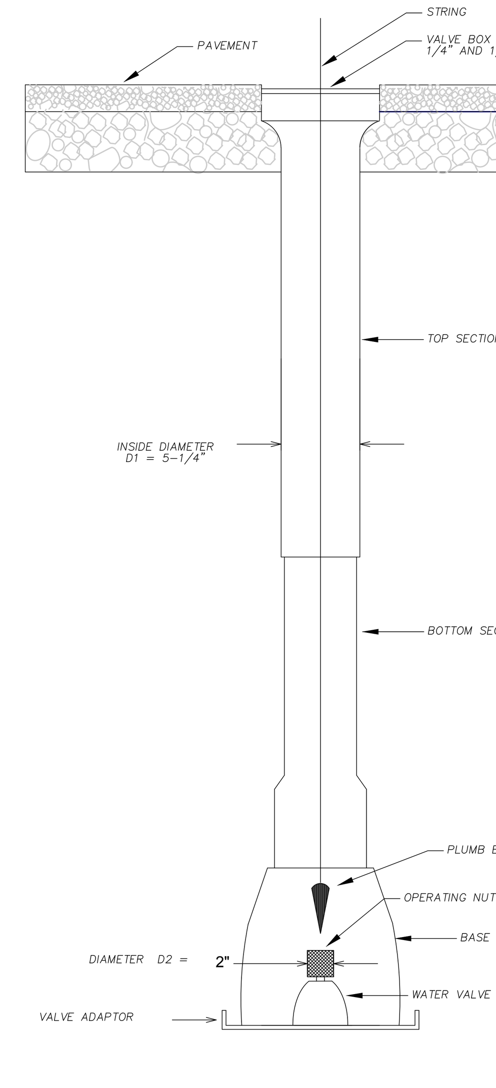

SECTION

NOTES:

1. VALVE BOX SHALL BE LOCATED PLUMB AND CENTERED WITH RESPECT TO THE VALVE OPERATING NUT.
2. ALLOWABLE TOLERANCE SHALL BE 1/2"
3. PLUMBNESS AND ALIGNMENT SHALL BE VERIFIED WITH A PLUMB BOB, LOCATING THE VALVE NUT WITHIN THE ALLOWABLE TOLERANCE, AND CONFIRMING THAT THE VALVE IS OPERATIONAL WITHOUT THE VALVE KEY TOUCHING THE INSIDE EDGE OF THE VALVE BOX.
4. FOR STREETS WITH SLOPE GREATER THAN 3% THAT DOES NOT ALLOW EASY PLUMBNESS VERIFICATION, THE VALVE BOX STRAIGHTNESS SHALL BE VISUALLY ASSESSED VERIFYING ITS RELATIVE CENTERED POSITION, CONFIRMING THAT THE VALVE IS OPERATIONAL WITHOUT THE VALVE KEY TOUCHING THE INSIDE EDGE OF THE VALVE BOX AND RESTRICTING ITS USE.

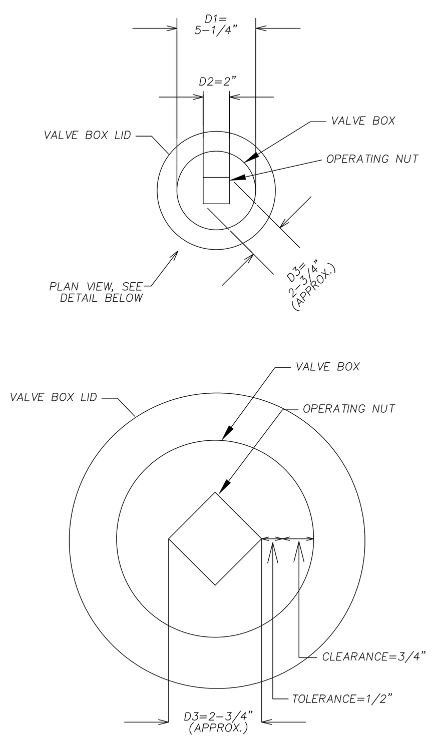

DETAIL

2 / C303 WATER VALVE BOX DETAIL
NOT TO SCALE

FIELD INSTALLATION-POLYETHYLENE WRAP

STEP-1

CLEAN SURFACE OF PIPE. CUT POLYETHYLENE TWO FEET LONGER THAN THE PIPE (8 MIL MIN.). PLACE TUBE OF POLYETHYLENE MATERIAL AROUND PIPE PRIOR TO LOWERING PIPE INTO TRENCH. DIG BELL HOLES AT JOINTS, LOWER PIPE.

STEP-2

LIFT ENOUGH TO PULL THE TUBE OVER THE PIPE. TAPE TUBE TO PIPE AT JOINT. FOLD MATERIAL AROUND THE ADJACENT SPIGOT END AND WRAP WITH THREE CIRCUMFERENTIAL TURNS OF TWO-INCH WIDE PLASTIC TAPE TO HOLD PLASTIC TUBE AROUND SPIGOT END.

STEP-3

ADJACENT TUBE OVERLAPS FIRST TUBE AND IS SECURED WITH PLASTIC ADHESIVE TAPE. THE POLYETHYLENE TUBE MATERIAL COVERING THE PIPE WILL BE LOOSE. EXCESS MATERIAL SHALL BE NEATLY DRAWN UP AROUND THE PIPE BARREL, FOLDED INTO AN OVERLAP ON TOP OF THE PIPE AND HELD IN PLACE BY MEANS OF PIECES OF THE PLASTIC TAPE AT APPROX. THREE FOOT INTERVALS. REPAIR ANY TEARS WITH TAPE OR SECURED POLYWRAP PATCHES. CAREFULLY BACKFILL TO AVOID DAMAGING THE POLYETHYLENE WRAP.

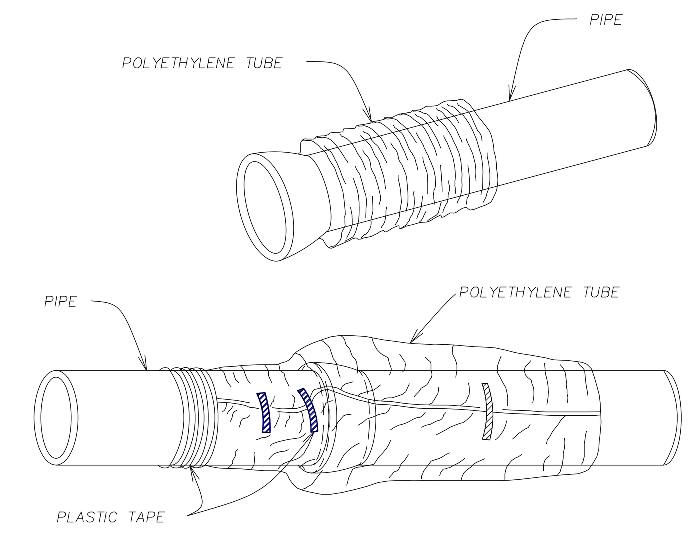

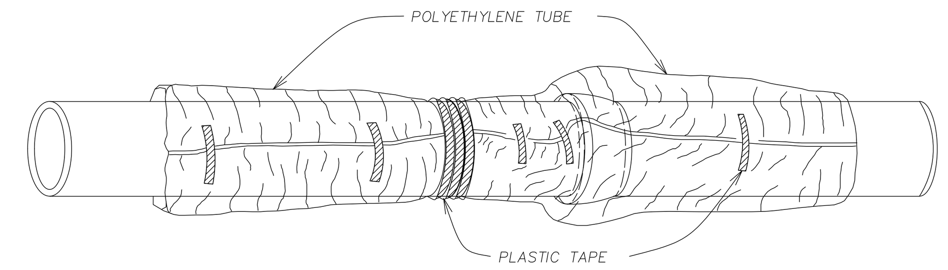

TAPPING POLYETHYLENE WRAP

STEP-1

WRAP TWO OR THREE LAYERS OF TAPE COMPLETELY AROUND PIPE WHERE TAPPING MACHINE WILL BE PLACED. MOUNT TAPPING MACHINE ON TAPED AREA AND TAP DIRECTLY THROUGH THE TAPE AND POLYETHYLENE WRAP. INSTALL CORPORATION STOP. INSPECT AREA FOR DAMAGE AND REPAIR IF NECESSARY. WRAP COPPER SERVICE LINE WITHIN THREE FEET OF PIPE LOCATION.

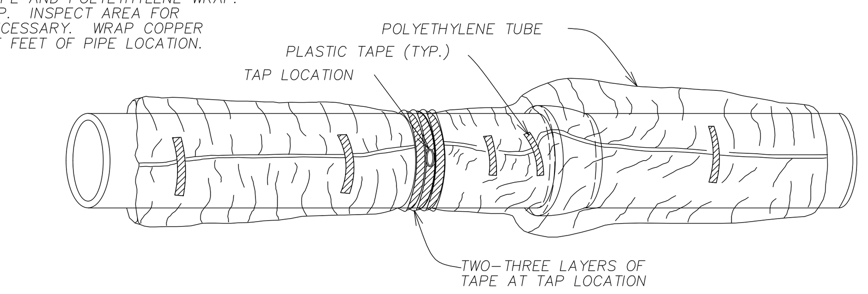

3 / C303 FIELD INSTALLED POLY WRAP DETAIL
NOT TO SCALE

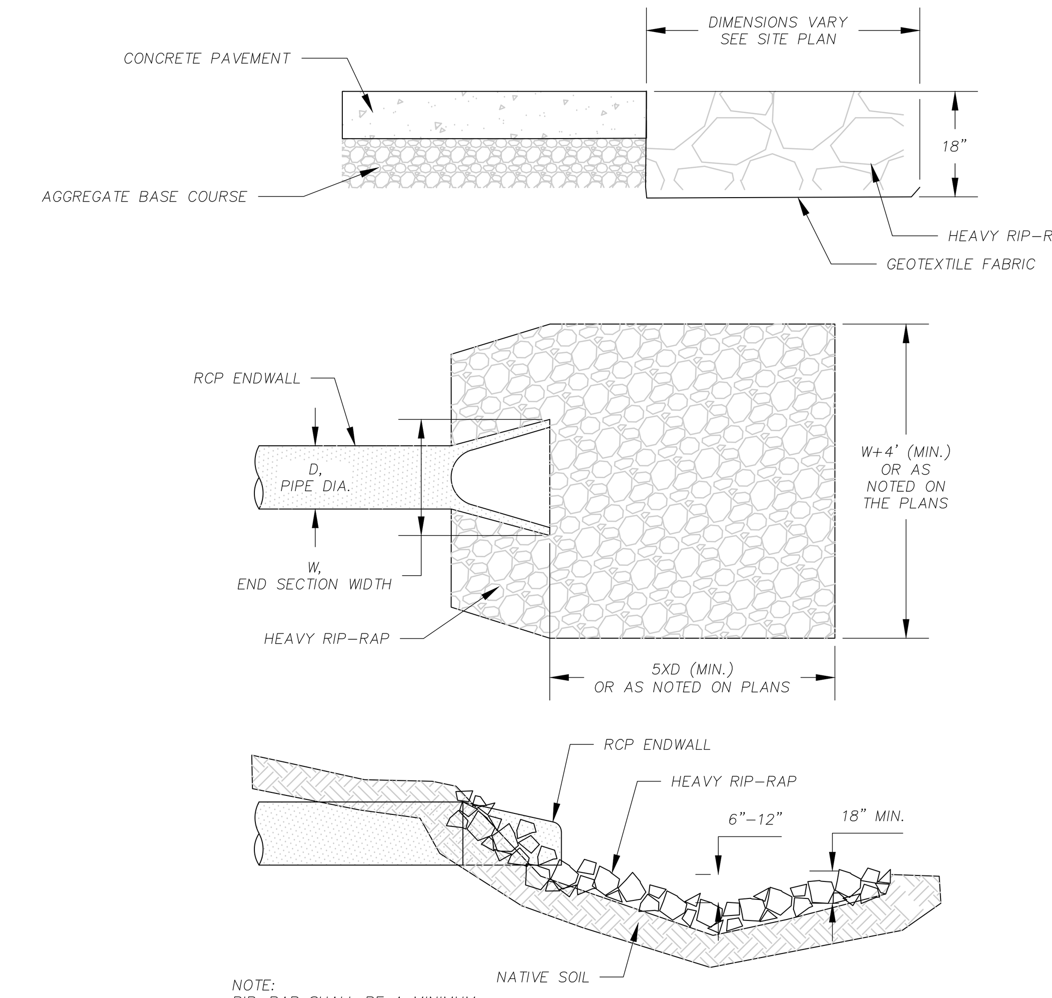

NOTE:
RIP-RAP SHALL BE A MINIMUM OF 2 C.Y. PER ENDWALL.

3 / C303 ENDWALL RIP-RAP DETAIL
NOT TO SCALE

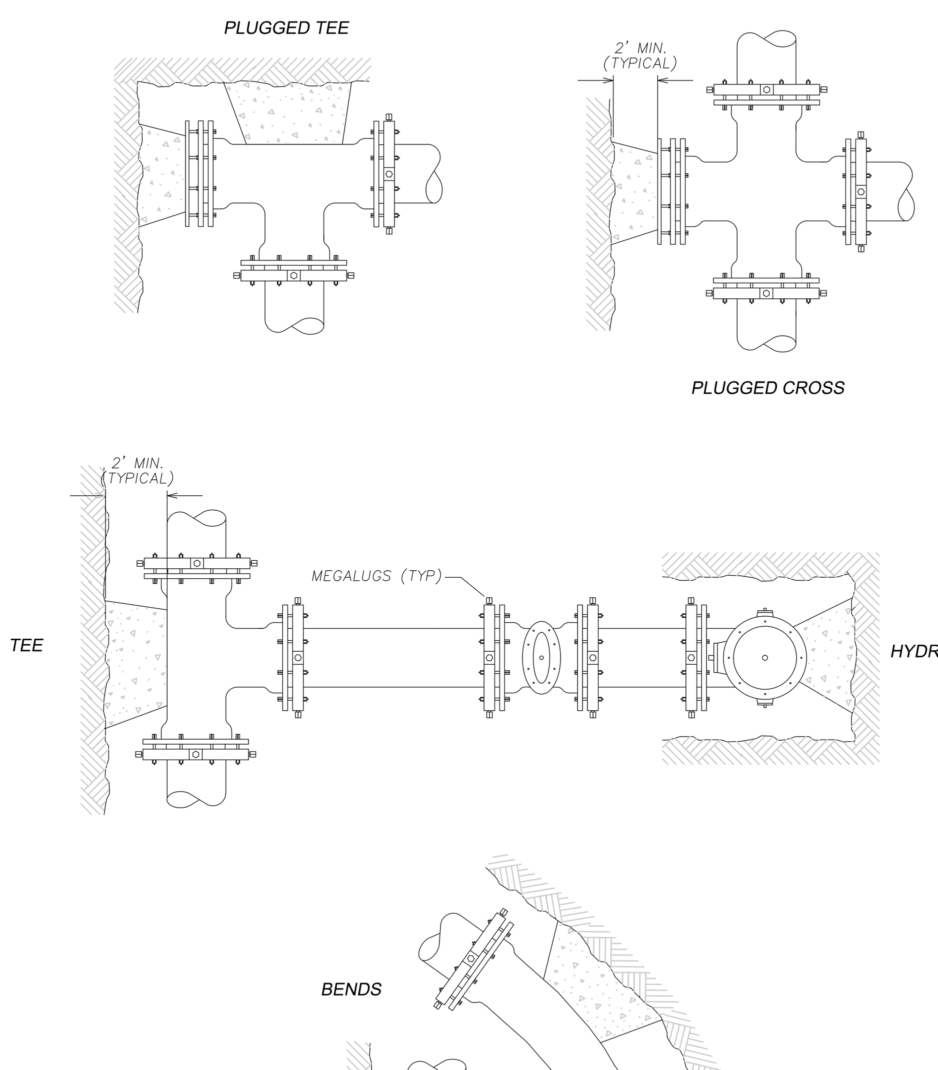

UNDISTURBED SOIL

POURED CONCRETE OR SOLID CONCRETE BLOCK WHERE SPECIFICATIONS ALLOW

5 / C303 CONCRETE THRUST BLOCK DETAILS
NOT TO SCALE

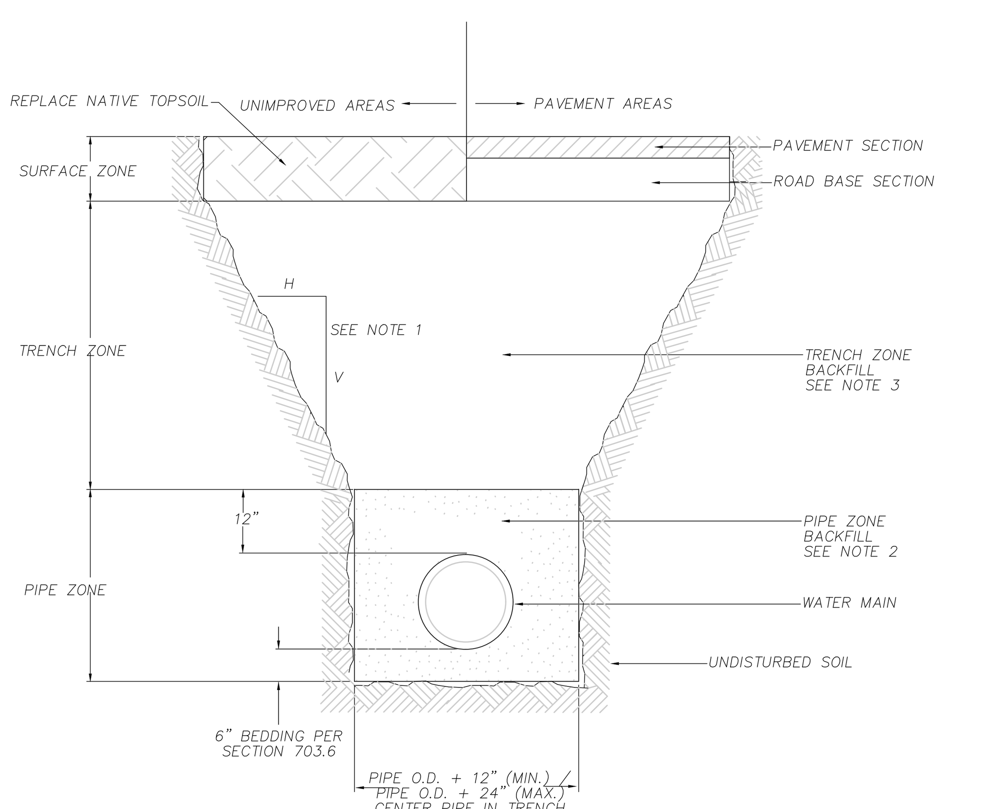

NOTES:

1. ALL EXCAVATION SHALL BE IN ACCORDANCE WITH THE WISCONSIN ADMINISTRATIVE CODE FOR "TRENCH EXCAVATION AND TUNNEL CONSTRUCTION" AND ANY ADDITIONAL REQUIREMENTS INCLUDING IN THE CONTRACT DOCUMENTS.
2. BACKFILL OPERATIONS SHALL COMPLY WITH SECTIONS 703.6 AND 202.2(B) OF THE STANDARD SPECIFICATIONS.
3. THE PIPE ZONE BEDDING MATERIAL SHALL CONSIST OF SELECT FILL SAND, LIMESTONE SCREENINGS, CLEAR STONE, OR WASHED GRAVEL.
4. SEE SECTION 703.6.1 FOR BACKFILL/COMPACTION REQUIREMENTS OF BEDDING/COVER MATERIAL IN THE PIPE ZONE.
5. TRENCH ZONE COMPACTION REQUIREMENTS:

-- ALL COMPACTION OPERATIONS SHALL COMPLY WITH SECTION 703.6.3
-- DENSITY REQUIREMENTS:
1. FROM 2-FEET OVER THE PIPE TO WITHIN 3-FEET OF THE SUBGRADE: A MINIMUM OF 90% OF MAXIMUM DENSITY.
2. WITHIN 3-FEET OF THE BOTTOM OF SUBGRADE: A MINIMUM OF 95% OF MAXIMUM DENSITY.

6 / C303 TYPICAL WATER PIPE TRENCH
NOT TO SCALE

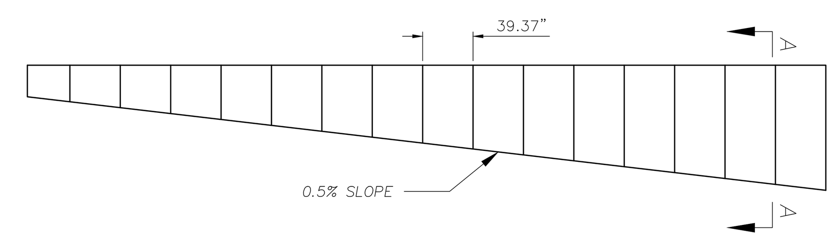

PROFILE VIEW

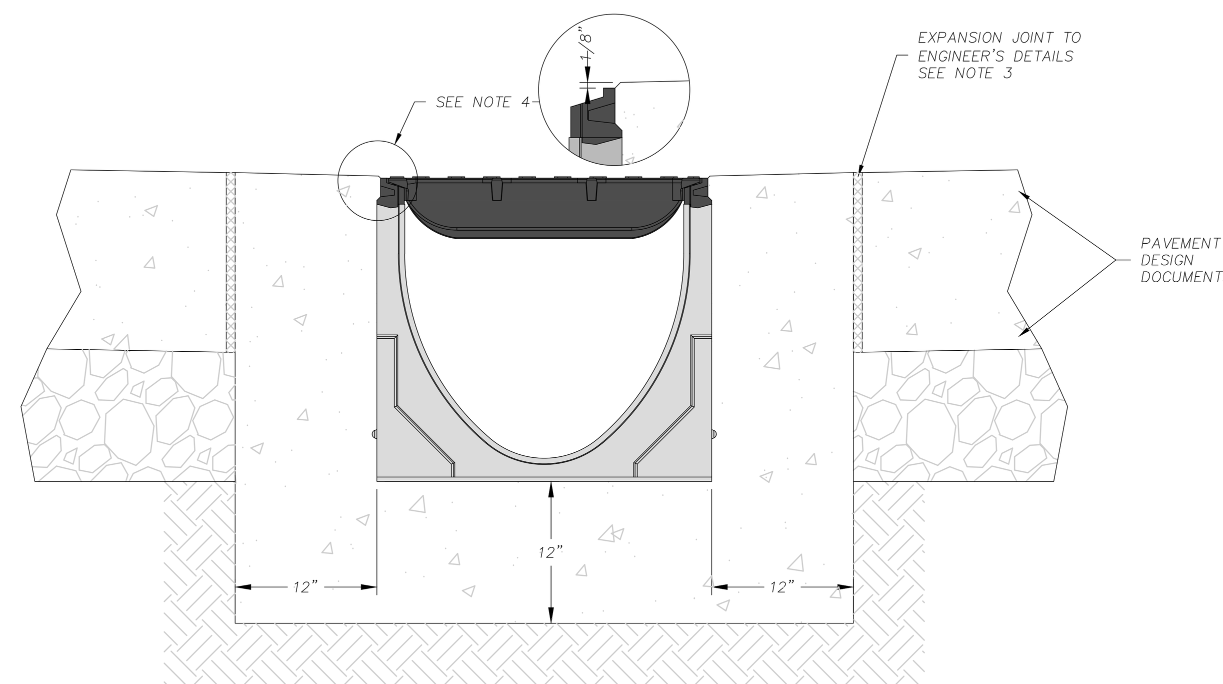

NOTES:

1. IT IS NECESSARY TO ENSURE MINIMUM DIMENSIONS SHOWN ARE SUITABLE FOR EXISTING GROUND CONDITIONS. **ENGINEERING ADVICE MAY BE REQUIRED.**
2. MINIMUM CONCRETE STRENGTH OF 4,000 PSI IS RECOMMENDED. CONCRETE SHOULD BE VIBRATED TO ELIMINATE AIR POCKETS.
3. EXPANSION AND CONTRACTION CONTROL JOINTS AND REINFORCEMENT ARE RECOMMENDED TO PROTECT CHANNEL AND CONCRETE SURROUND. **ENGINEERING ADVICE MAY BE REQUIRED.**
4. THE FINISHED LEVEL OF THE CONCRETE SURROUND MUST BE APPROX. 1/8" [3mm] ABOVE THE TOP OF THE CHANNEL EDGE.
5. CONCRETE BASE THICKNESS SHOULD MATCH SLAB THICKNESS. ENGINEERING ADVICE MAY BE REQUIRED TO DETERMINE PROPER LOAD CLASS.
6. REFER TO ACO'S LATEST INSTALLATION INSTRUCTIONS FOR FURTHER DETAILS.

7 / C303 ACO #S300K DETAIL
NOT TO SCALE

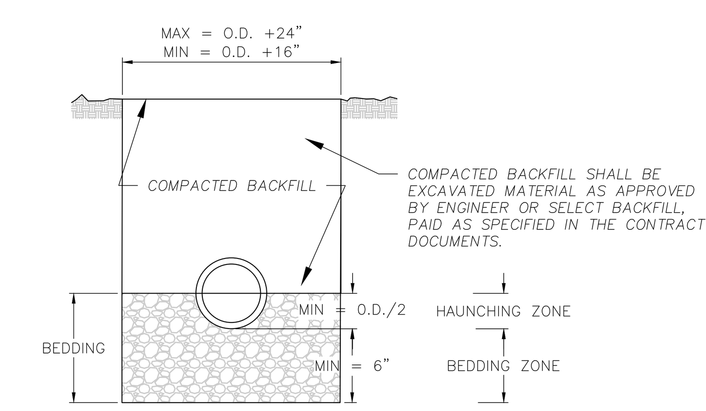

WASHED GRAVEL OR CRUSHED STONE AS SPECIFIED IN SECTION 502.1(d), BEDDING OF SEWER PIPE

BEDDING FOR REINFORCED CONCRETE SEWER PIPES

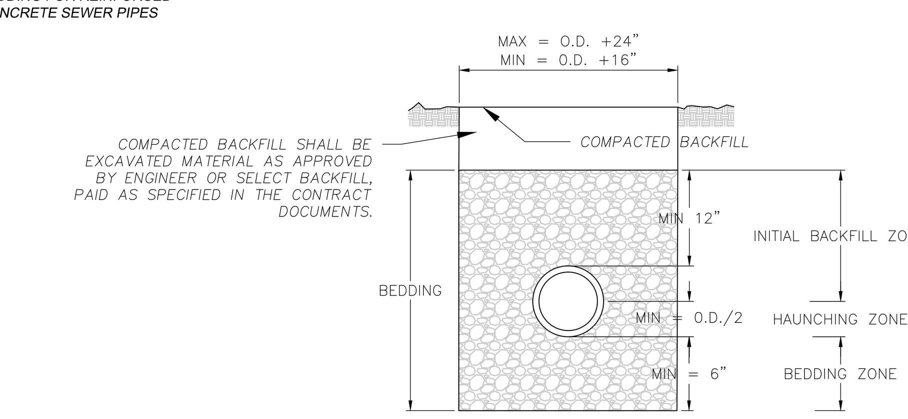

WASHED GRAVEL, CRUSHED STONE, SAND OR LIMESTONE SCREENINGS FOR PIPE SIZES 10" IN DIAMETER OR LESS. WASHED GRAVEL OR CRUSHED STONE FOR PIPE SIZES OVER 10" IN DIAMETER. AS SPECIFIED IN SECTION 502-1(d), BEDDING OF SEWER PIPES

BEDDING FOR SANITARY SEWER PIPES AS WELL AS METAL, ADS, AND PVC STORM PIPES

NOTES:

UNLESS OTHERWISE SPECIFIED, ALL SANITARY AND STORM SEWER PIPES, INCLUDING LATERALS AND LEADS, SHALL BE INSTALLED WITH THE TYPE OF BEDDING SHOWN FOR THE TYPE AND SIZE OF PIPE INSTALLED.

THE COST OF BEDDING SHALL BE INCLUDED IN THE UNIT PRICES BID FOR THE PIPE. FOR RCP, BEDDING INCLUDES THE HAUNCHING & BEDDING ZONES. FOR PLASTIC PIPES, THE BEDDING INCLUDES THE HAUNCHING, BEDDING & INITIAL BACKFILL ZONES. THE BEDDING SHALL BE INSTALLED & COMPACTED IN 6" MAXIMUM LIFTS.

ALL TRENCHES SHALL BE HAND BACKFILLED TO A POINT 12" ABOVE THE TOP OF THE PIPE. ALL BEDDING SHALL BE MECHANICALLY COMPACTED.

PAYMENT SHALL NOT BE MADE FOR BACKFILL WITH EXCAVATED MATERIAL, IF APPROVED. SELECT FILL IF REQUIRED. SHALL BE PAID PER CONTRACT.

THE MAXIMUM ALLOWABLE TRENCH WIDTH SHALL BE O.D. +24" AND MINIMUM OF O.D. +16" AS SPECIFIED, AND SHALL APPLY FROM THE BOTTOM OF THE TRENCH TO A POINT 12" ABOVE THE TOP OF THE PIPE. WHERE THIS WIDTH IS EXCEEDED, THE CONTRACTOR SHALL FURNISH AND INSTALL A HIGHER TYPE OF BEDDING AT NO EXTRA COST. THE TYPE OF BEDDING SHALL BE DETERMINED BY THE ENGINEER.

O.D. EQUALS THE OUTSIDE DIAMETER OF THE PIPE.

8 / C303 PIPE BEDDING
NOT TO SCALE

OPN ARCHITECTS

301 N BROOM STREET #100
MADISON, WI 53703
608-819-0260 PHONE
www.opnarchitects.com
opn@opnarchitects.com

All reports, plans, specifications, computer files, field data, notes and other documents and instruments prepared by OPN Architects, Inc. as instruments of service shall remain the property of OPN Architects, Inc. OPN Architects, Inc. shall retain all common law, statutory and other reserved rights, including the copyright thereto.

© 2017 OPN Architects, Inc.

Owner
City of Madison Fire Department
314 W. Dayton St.
Madison, WI 53703

Project
Madison Fire Station 14
3201 Dairy Drive
Madison, WI 53718

Civil Engineer
Snyder & Associates, Inc
5010 Voges Rd
Madison WI, 53718
P. 608-838-0444

Structural Engineer
IMEG
1800 Deming Way #200
Middleton, WI 53562
P. 608-223-0444

Mechanical Engineer
IMEG
1800 Deming Way #200
Middleton, WI 53562
P. 608-223-0444

Electrical Engineer
IMEG
1800 Deming Way #200
Middleton, WI 53562
P. 608-223-0444

Key Plan

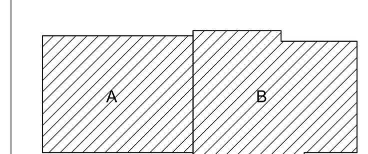

Sheet Issue Date
BID DOCUMENTS 11/03/17

Revision Date

BID DOCUMENTS

Drawing
Plan Details

City of Madison Contract No. **8027**
OPN Project No. **17207000**

C303

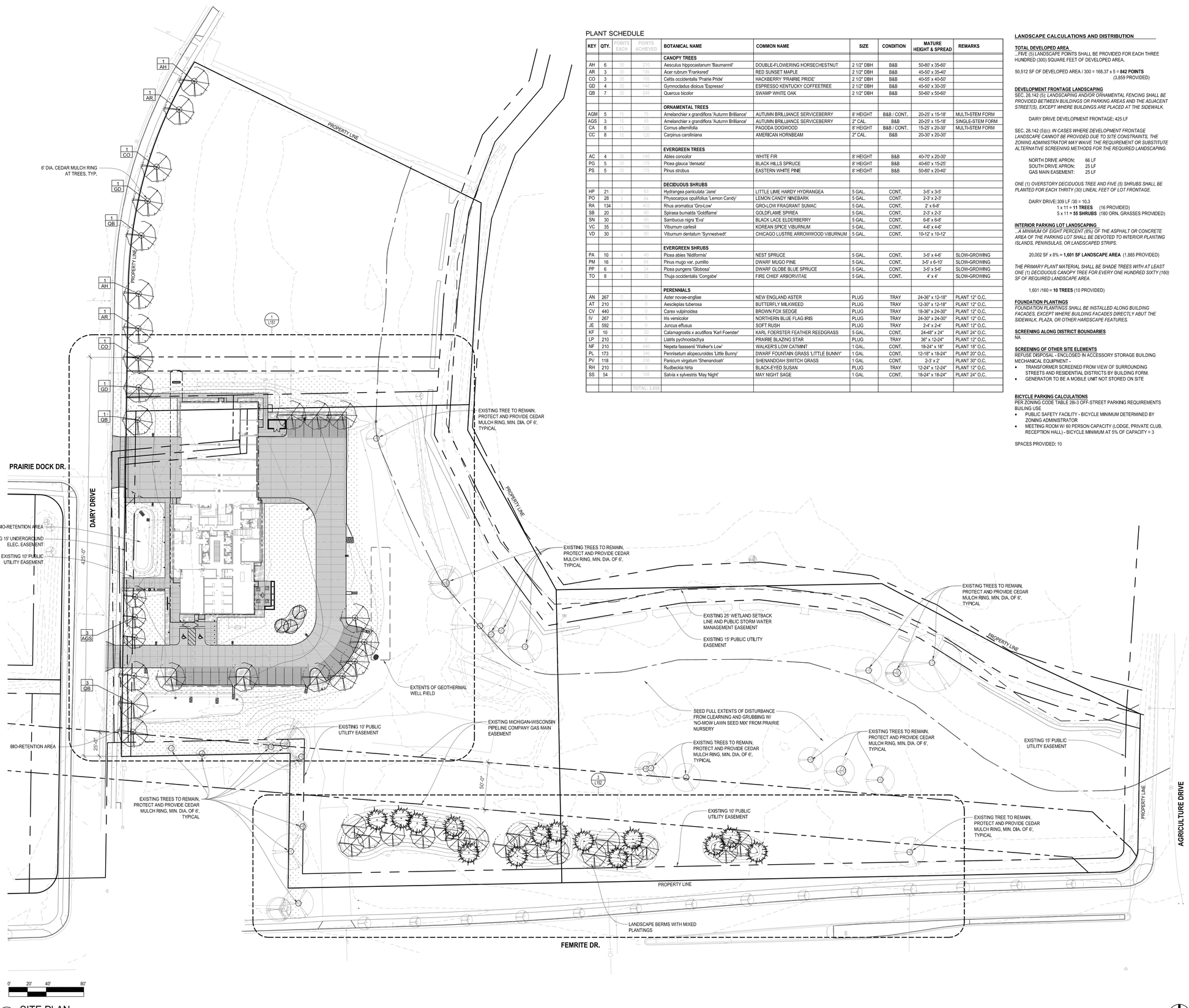

1 SITE PLAN
1" = 40'-0"

PLANT SCHEDULE

KEY	QTY.	POINTS EACH	POINTS ACHIEVED	BOTANICAL NAME	COMMON NAME	SIZE	CONDITION	MATURE HEIGHT & SPREAD	REMARKS
				CANOPY TREES					
AH	6	35	210	Aesculus hippocastanum 'Baumannii'	DOUBLE-FLOWERING HORSECHESTNUT	2 1/2" DBH	B&B	50-80' x 35-60'	
AR	3	35	105	Acer rubrum 'Frankred'	RED SUNSET MAPLE	2 1/2" DBH	B&B	45-50' x 35-40'	
CO	3	35	105	Celtis occidentalis 'Prairie Pride'	HACKBERRY 'PRAIRIE PRIDE'	2 1/2" DBH	B&B	40-55' x 40-50'	
GD	4	35	140	Gymnocladus dioicus 'Espresso'	ESPRESSO KENTUCKY COFFEETREE	2 1/2" DBH	B&B	45-50' x 30-35'	
QB	7	35	245	Quercus bicolor	SWAMP WHITE OAK	2 1/2" DBH	B&B	50-60' x 50-60'	
				ORNAMENTAL TREES					
AGM	5	15	75	Amelanchier x grandiflora 'Autumn Brilliance'	AUTUMN BRILLIANCE SERVICEBERRY	8' HEIGHT	B&B / CONT.	20-25' x 15-18'	MULTI-STEM FORM
AGS	3	15	45	Amelanchier x grandiflora 'Autumn Brilliance'	AUTUMN BRILLIANCE SERVICEBERRY	2" CAL.	B&B	20-25' x 15-18'	SINGLE-STEM FORM
CA	8	15	120	Cornus alternifolia	PAGODA DOGWOOD	8' HEIGHT	B&B / CONT.	15-25' x 20-30'	MULTI-STEM FORM
CC	8	15	120	Carpinus caroliniana	AMERICAN HORNBEAM	2" CAL.	B&B	20-30' x 20-30'	
				EVERGREEN TREES					
AC	4	35	140	Abies concolor	WHITE FIR	8' HEIGHT	B&B	40-70' x 20-30'	
PG	5	35	175	Picea glauca 'densata'	BLACK HILLS SPRUCE	8' HEIGHT	B&B	40-60' x 15-25'	
PS	5	35	175	Pinus strobus	EASTERN WHITE PINE	8' HEIGHT	B&B	50-80' x 20-40'	
				DECIDUOUS SHRUBS					
HP	21	3	63	Hydrangea paniculata 'Jane'	LITTLE LIME HARDY HYDRANGEA	5 GAL.	CONT.	3-5' x 3-5'	
PO	28	3	84	Physocarpus opulifolius 'Lemon Candy'	LEMON CANDY NINEBARK	5 GAL.	CONT.	2-3' x 2-3'	
RA	134	3	402	Rhus aromatica 'Gro-Low'	GRO-LOW FRAGRANT SUMAC	5 GAL.	CONT.	2' x 6-8'	
SB	20	3	60	Spiraea bumalda 'Goldflame'	GOLDFLAME SPIREA	5 GAL.	CONT.	2-3' x 2-3'	
SN	30	3	90	Sambucus nigra 'Eva'	BLACK LACE ELDERBERRY	5 GAL.	CONT.	6-8' x 6-8'	
VC	35	3	105	Viburnum carlesii	KOREAN SPICE VIBURNUM	5 GAL.	CONT.	4-6' x 4-6'	
VD	30	3	90	Viburnum dentatum 'Synnestvedt'	CHICAGO LUSTRE ARROWWOOD VIBURNUM	5 GAL.	CONT.	10-12' x 10-12'	
				EVERGREEN SHRUBS					
PA	10	4	40	Picea abies 'Nidiformis'	NEST SPRUCE	5 GAL.	CONT.	3-5' x 4-6'	SLOW-GROWING
PM	16	4	64	Pinus mugo var. pumilio	DWARF MUGO PINE	5 GAL.	CONT.	3-5' x 6-10'	SLOW-GROWING
PP	6	4	24	Picea pungens 'Globosa'	DWARF GLOBE BLUE SPRUCE	5 GAL.	CONT.	3-5' x 5-6'	SLOW-GROWING
TO	8	4	32	Thuja occidentalis 'Congabe'	FIRE CHIEF ARBORVITAE	5 GAL.	CONT.	4' x 4'	SLOW-GROWING
				PERENNIALS					
AN	267	0	0	Aster novae-angliae	NEW ENGLAND ASTER	PLUG	TRAY	24-36" x 12-18"	PLANT 12" O.C.
AT	210	0	0	Aesclepias tuberosa	BUTTERFLY MILKWEED	PLUG	TRAY	12-30" x 12-18"	PLANT 12" O.C.
CV	440	0	0	Carex vulpinoidea	BROWN FOX SEDGE	PLUG	TRAY	18-36" x 24-30"	PLANT 12" O.C.
IV	267	0	0	Iris versicolor	NORTHERN BLUE FLAG IRIS	PLUG	TRAY	24-30" x 24-30"	PLANT 12" O.C.
JE	592	0	0	Juncus effusus	SOFT RUSH	PLUG	TRAY	2-4' x 2-4'	PLANT 12" O.C.
KF	10	2	20	Calamagrostis x acutiflora 'Karl Foerster'	KARL FOERSTER FEATHER REEDGRASS	5 GAL.	CONT.	24-48" x 24"	PLANT 24" O.C.
LP	210	0	0	Liatris pychnostachya	PRAIRIE BLAZING STAR	PLUG	TRAY	36" x 12-24"	PLANT 12" O.C.
NF	210	2	440	Nepeta faassenii 'Walker's Low'	WALKER'S LOW CATMINT	1 GAL.	CONT.	18-24" x 18"	PLANT 18" O.C.
PL	173	2	346	Pennisetum alopecuroides 'Little Bunny'	DWARF FOUNTAIN GRASS 'LITTLE BUNNY'	1 GAL.	CONT.	12-18" x 18-24"	PLANT 20" O.C.
PV	118	2	236	Panicum virgatum 'Shenandoah'	SHENANDOAH SWITCH GRASS	1 GAL.	CONT.	2-3' x 2'	PLANT 30" O.C.
RH	210	0	0	Rudbeckia hirta	BLACK-EYED SUSAN	PLUG	TRAY	12-24" x 12-24"	PLANT 12" O.C.
SS	54	2	108	Salvia x sylvestris 'May Night'	MAY NIGHT SAGE	1 GAL.	CONT.	18-24" x 18-24"	PLANT 24" O.C.
			TOTAL: 3,889						

LANDSCAPE CALCULATIONS AND DISTRIBUTION

TOTAL DEVELOPED AREA
...FIVE (5) LANDSCAPE POINTS SHALL BE PROVIDED FOR EACH THREE HUNDRED (300) SQUARE FEET OF DEVELOPED AREA.

50,512 SF OF DEVELOPED AREA / 300 = 168.37 x 5 = **842 POINTS**
(3,859 PROVIDED)

DEVELOPMENT FRONTAGE LANDSCAPING
SEC. 28.142 (5): *LANDSCAPING AND/OR ORNAMENTAL FENCING SHALL BE PROVIDED BETWEEN BUILDINGS OR PARKING AREAS AND THE ADJACENT STREET(S), EXCEPT WHERE BUILDINGS ARE PLACED AT THE SIDEWALK.*

DAIRY DRIVE DEVELOPMENT FRONTAGE: 425 LF

SEC. 28.142 (5)(c): *IN CASES WHERE DEVELOPMENT FRONTAGE LANDSCAPE CANNOT BE PROVIDED DUE TO SITE CONSTRAINTS, THE ZONING ADMINISTRATOR MAY WAIVE THE REQUIREMENT OR SUBSTITUTE ALTERNATIVE SCREENING METHODS FOR THE REQUIRED LANDSCAPING.*

NORTH DRIVE APRON: 66 LF
SOUTH DRIVE APRON: 25 LF
GAS MAIN EASEMENT: 25 LF

ONE (1) OVERSTORY DECIDUOUS TREE AND FIVE (5) SHRUBS SHALL BE PLANTED FOR EACH THIRITY (30) LINEAL FEET OF LOT FRONTAGE.

DAIRY DRIVE: 309 LF /30 = 10.3
1 x 11 = **11 TREES** (16 PROVIDED)
5 x 11 = **55 SHRUBS** (180 ORN. GRASSES PROVIDED)

INTERIOR PARKING LOT LANDSCAPING
...A MINIMUM OF EIGHT PERCENT (8%) OF THE ASPHALT OR CONCRETE AREA OF THE PARKING LOT SHALL BE DEVOTED TO INTERIOR PLANTING ISLANDS, PENINSULAS, OR LANDSCAPED STRIPS.

20,002 SF x 8% = **1,601 SF LANDSCAPE AREA** (1,885 PROVIDED)

THE PRIMARY PLANT MATERIAL SHALL BE SHADE TREES WITH AT LEAST ONE (1) DECIDUOUS CANOPY TREE FOR EVERY ONE HUNDRED SIXTY (160) SF OF REQUIRED LANDSCAPE AREA.

1,601 /160 = **10 TREES** (10 PROVIDED)

FOUNDATION PLANTINGS
FOUNDATION PLANTINGS SHALL BE INSTALLED ALONG BUILDING FACADES, EXCEPT WHERE BUILDING FACADES DIRECTLY ABUT THE SIDEWALK, PLAZA, OR OTHER HARDSCAPE FEATURES.

SCREENING ALONG DISTRICT BOUNDARIES
NA

SCREENING OF OTHER SITE ELEMENTS
REFUSE DISPOSAL - ENCLOSED IN ACCESSORY STORAGE BUILDING
MECHANICAL EQUIPMENT -
- TRANSFORMER SCREENED FROM VIEW OF SURROUNDING STREETS AND RESIDENTIAL DISTRICTS BY BUILDING FORM.
- GENERATOR TO BE A MOBILE UNIT NOT STORED ON SITE

BICYCLE PARKING CALCULATIONS
PER ZONING CODE TABLE 28i-3 OFF-STREET PARKING REQUIREMENTS
BUILNG USE
- PUBLIC SAFETY FACILITY - BICYCLE MINIMUM DETERMINED BY ZONING ADMINISTRATOR
- MEETING ROOM W/ 60 PERSON CAPACITY (LODGE, PRIVATE CLUB, RECEPTION HALL) - BICYCLE MINIMUM AT 5% OF CAPACITY = 3

SPACES PROVIDED: 10

GENERAL NOTES:

1. FIELD VERIFY ALL EXISTING SITE CONDITIONS, UNDERGROUND UTILITIES, ABOVE GRADE UTILITIES, AND UTILITY STRUCTURES. EXTENT OF PAVING AND CURBS, AND ALL EXISTING VEGETATION PRIOR TO DEMOLITION OR NEW CONSTRUCTION. CONTACT WISCONSIN ONE-CALL AND OWNER FOR UTILITY LOCATES PRIOR TO ANY WORK ON SITE. NOTIFY ARCHITECT OF ANY DISCREPANCIES BEFORE CONTINUING DEMOLITION OR NEW CONSTRUCTION.
2. REFERENCE CIVIL SHEETS FOR DEMOLITION, PAVING, SITE STRUCTURES, UTILITIES, AND GRADING.
4. REFERENCE ELECTRICAL SHEETS FOR SITE LIGHTING FIXTURES AND POWER.
5. CONTRACTOR MUST PROVIDE EROSION / SEDIMENTATION CONTROLS AS REQUIRED TO CONTAIN SEDIMENT WITHIN CONSTRUCTION AREA. REFERENCE CIVIL SHEETS FOR ADDITIONAL INFORMATION.

OPN ARCHITECTS
301 N BROOM STREET #100
MADISON, WI 53703
608-819-0260 PHONE
www.opnarchitects.com
opn@opnarchitects.com

All reports, plans, specifications, computer files, field data, notes and other documents and instruments prepared by OPN Architects, Inc. as instruments of service shall remain the property of OPN Architects, Inc. OPN Architects, Inc. shall retain all common law, statutory and other reserved rights, including the copyright thereto.

© 2017 OPN Architects, Inc.

Owner
City of Madison Fire Department
314 W. Dayton St.
Madison, WI 53703

Project
Madison Fire Station 14
3201 Dairy Drive
Madison, WI 53718

Civil Engineer
Snyder & Assoclates, Inc
5010 Voges Rd
Madison WI, 53718
P. 608-838-0444

Structural Engineer
IMEG
1800 Deming Way #200
Middleton, WI 53562
P. 608-223-0444

Mechanical Engineer
IMEG
1800 Deming Way #200
Middleton, WI 53562
P. 608-223-0444

Electrical Engineer
IMEG
1800 Deming Way #200
Middleton, WI 53562
P. 608-223-0444

Key Plan

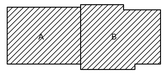

Sheet Issue Date	
BID DOCUMENTS	11/03/17

Revision	Date

BID DOCUMENTS

Drawing
LANDSCAPE PLAN

City of Madison Contract No. **8027**
OPN Project No. **17207000**

L101

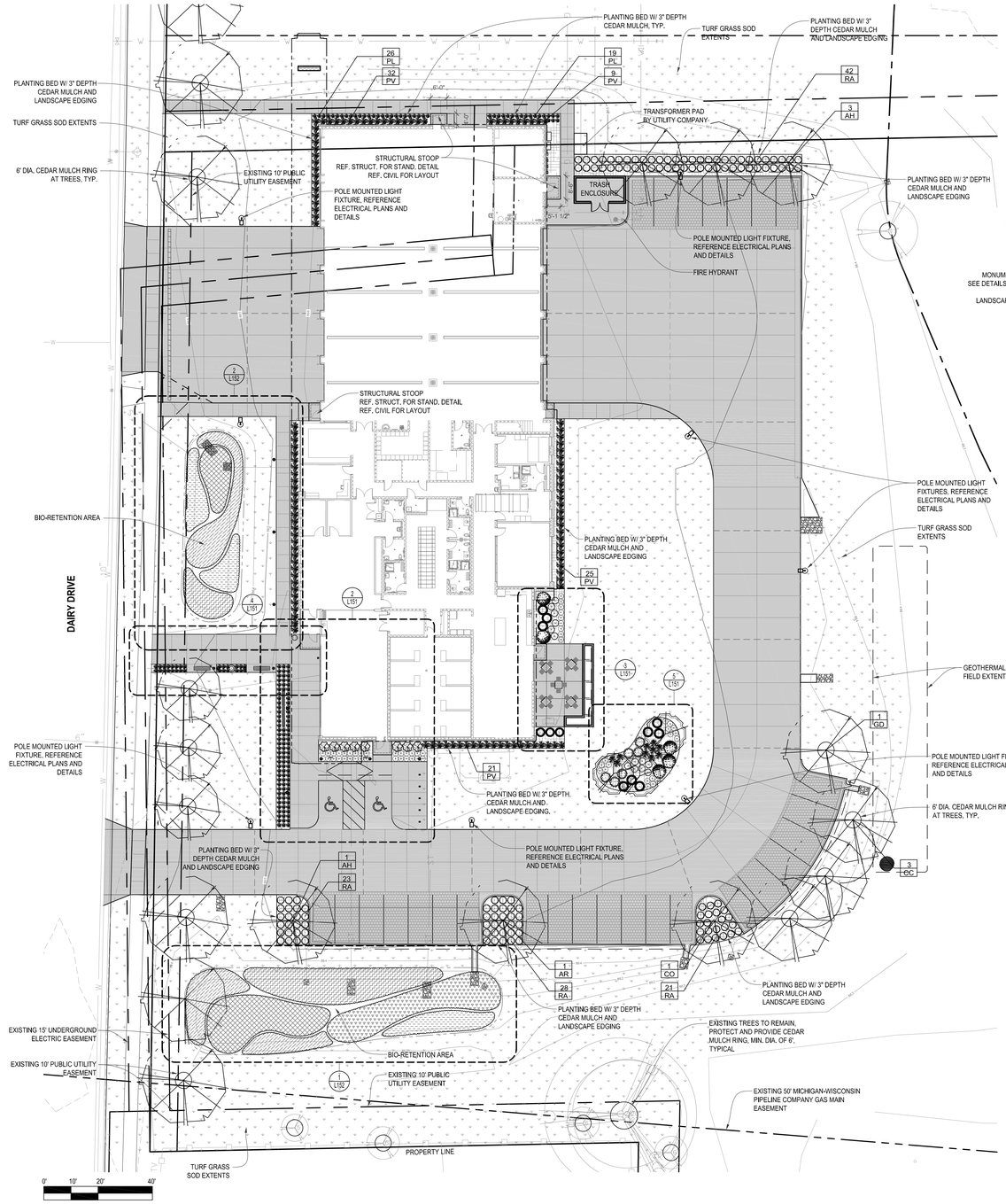

1 SITE PLAN ENLARGEMENT
1" = 20'-0"

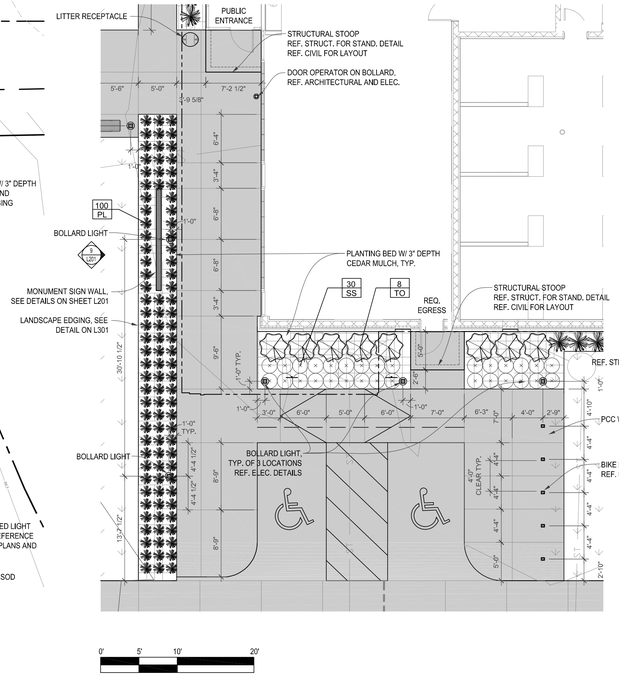

2 SITE PLAN ENLARGEMENT
1/8" = 1'-0"

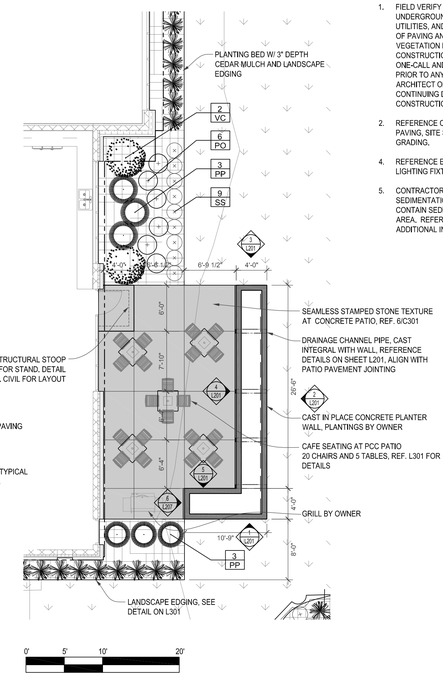

3 SITE PLAN ENLARGEMENT
1/8" = 1'-0"

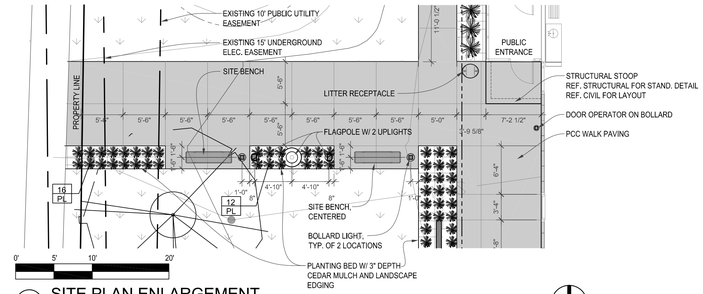

4 SITE PLAN ENLARGEMENT
1/8" = 1'-0"

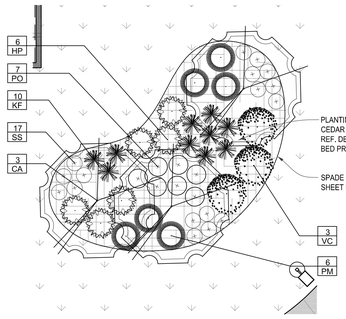

5 SITE PLAN ENLARGEMENT
1/8" = 1'-0"

GENERAL NOTES:

1. FIELD VERIFY ALL EXISTING SITE CONDITIONS, UNDERGROUND UTILITIES, ABOVE GRADE UTILITIES, AND UTILITY STRUCTURES. EXTENT OF PAVING AND CURBS, AND ALL EXISTING VEGETATION PRIOR TO DEMOLITION OR NEW CONSTRUCTION. CONTACT WISCONSIN ONE-CALL AND OWNER FOR UTILITY LOCATES PRIOR TO ANY WORK ON SITE. NOTIFY ARCHITECT OF ANY DISCREPANCIES BEFORE CONTINUING DEMOLITION OR NEW CONSTRUCTION.
2. REFERENCE CIVIL SHEETS FOR DEMOLITION, PAVING, SITE STRUCTURES, UTILITIES, AND GRADING.
4. REFERENCE ELECTRICAL SHEETS FOR SITE LIGHTING FIXTURES AND POWER.
5. CONTRACTOR MUST PROVIDE EROSION / SEDIMENTATION CONTROLS AS REQUIRED TO CONTAIN SEDIMENT WITHIN CONSTRUCTION AREA. REFERENCE CIVIL SHEETS FOR ADDITIONAL INFORMATION.

OPN ARCHITECTS
301 N BROOM STREET #100
MADISON, WI 53703
608-819-0260 PHONE
www.opnarchitects.com
opn@opnarchitects.com

All reports, plans, specifications, computer files, field data, notes and other documents and instruments prepared by OPN Architects, Inc. as instruments of service shall remain the property of OPN Architects, Inc. OPN Architects, Inc. shall retain all common law, statutory and other reserved rights, including the copyright thereto.

© 2017 OPN Architects, Inc.

Owner
City of Madison Fire Department
314 W. Dayton St.
Madison, WI 53703

Project
Madison Fire Station 14
3201 Dairy Drive
Madison, WI 53718

Civil Engineer
Snyder & Associates, Inc
5010 Voges Rd
Madison WI, 53718
P. 608-838-0444

Structural Engineer
IMEG
1800 Deming Way #200
Middleton, WI 53562
P. 608-223-0444

Mechanical Engineer
IMEG
1800 Deming Way #200
Middleton, WI 53562
P. 608-223-0444

Electrical Engineer
IMEG
1800 Deming Way #200
Middleton, WI 53562
P. 608-223-0444

Key Plan

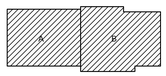

Sheet Issue Date
BID DOCUMENTS 11/03/17

Revision Date

BID DOCUMENTS

Drawing
LANDSCAPE PLAN ENLARGEMENTS

City of Madison Contract No. **8027**
OPN Project No. **17207000**

L151

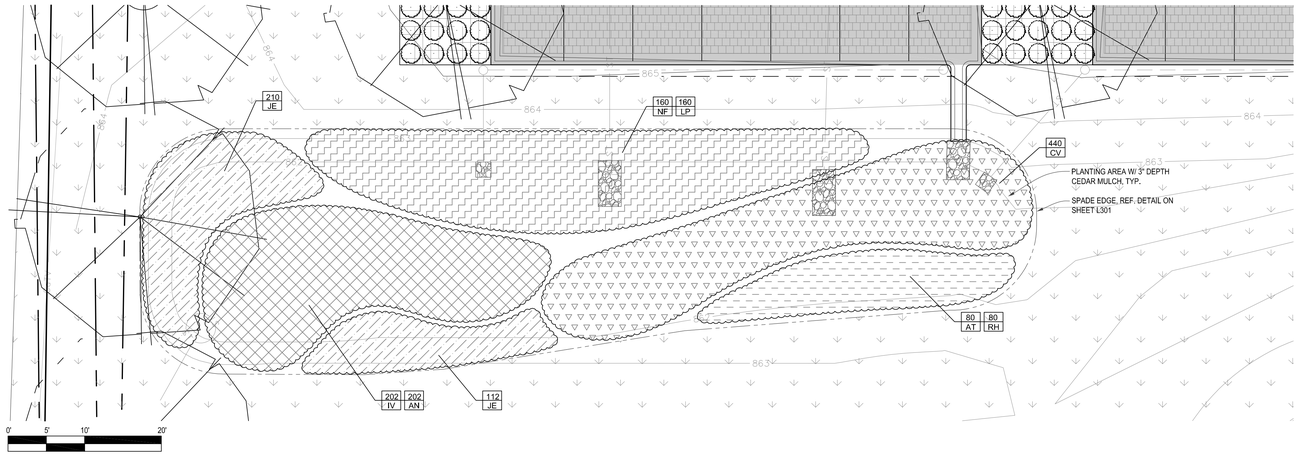

1 SITE PLAN ENLARGEMENT
1/8" = 1'-0"

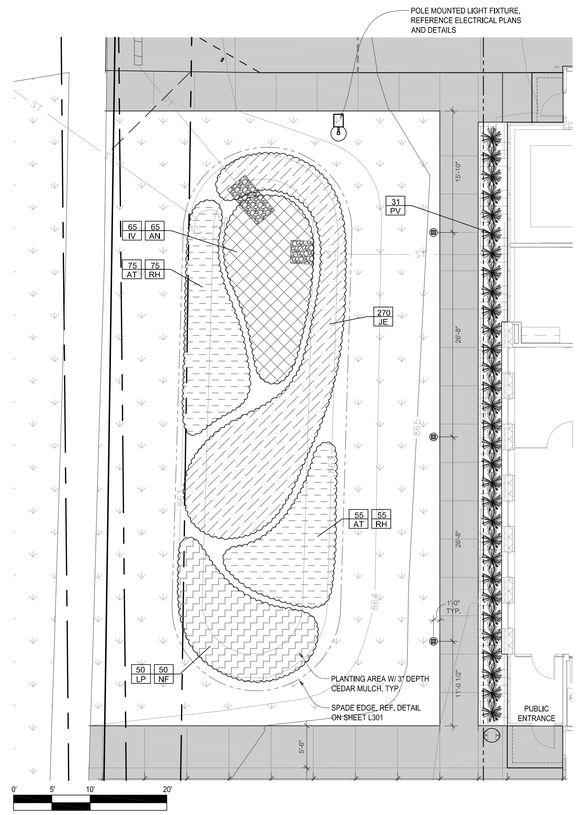

2 SITE PLAN ENLARGEMENT
1/8" = 1'-0"

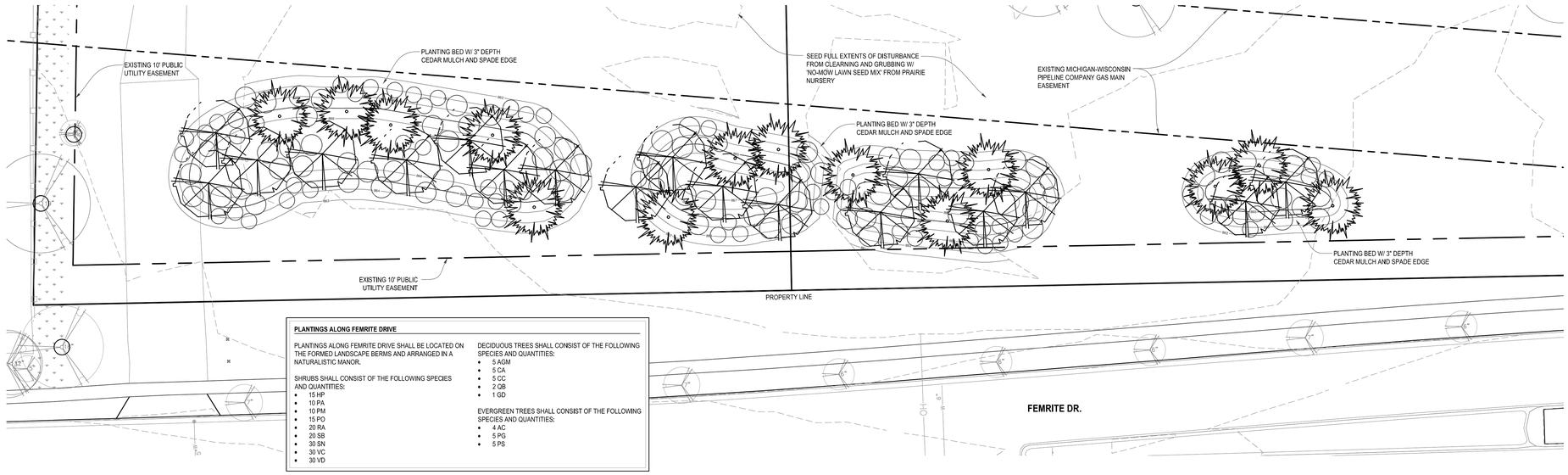

PLANTINGS ALONG FEMRITE DRIVE

PLANTINGS ALONG FEMRITE DRIVE SHALL BE LOCATED ON THE FORMED LANDSCAPE BERMS AND ARRANGED IN A NATURALISTIC MANOR.

SHRUBS SHALL CONSIST OF THE FOLLOWING SPECIES AND QUANTITIES:
- 15 HP
- 10 PA
- 10 PM
- 15 PO
- 20 RA
- 20 SB
- 30 SN
- 30 VC
- 30 VD

DECIDUOUS TREES SHALL CONSIST OF THE FOLLOWING SPECIES AND QUANTITIES:
- 5 AGM
- 5 CA
- 5 CC
- 2 QB
- 1 GD

EVERGREEN TREES SHALL CONSIST OF THE FOLLOWING SPECIES AND QUANTITIES:
- 4 AC
- 5 PG
- 5 PS

3 SITE PLAN ENLARGEMENT - FEMRITE DRIVE FRONTAGE
1" = 20'-0"

GENERAL NOTES:

1. FIELD VERIFY ALL EXISTING SITE CONDITIONS, UNDERGROUND UTILITIES, ABOVE GRADE UTILITIES, AND UTILITY STRUCTURES. EXTENT OF PAVING AND CURBS, AND ALL EXISTING VEGETATION PRIOR TO DEMOLITION OR NEW CONSTRUCTION. CONTACT WISCONSIN ONE-CALL AND OWNER FOR UTILITY LOCATES PRIOR TO ANY WORK ON SITE. NOTIFY ARCHITECT OF ANY DISCREPANCIES BEFORE CONTINUING DEMOLITION OR NEW CONSTRUCTION.
2. REFERENCE CIVIL SHEETS FOR DEMOLITION, PAVING, SITE STRUCTURES, UTILITIES, AND GRADING.
4. REFERENCE ELECTRICAL SHEETS FOR SITE LIGHTING FIXTURES AND POWER.
5. CONTRACTOR MUST PROVIDE EROSION / SEDIMENTATION CONTROLS AS REQUIRED TO CONTAIN SEDIMENT WITHIN CONSTRUCTION AREA. REFERENCE CIVIL SHEETS FOR ADDITIONAL INFORMATION.

OPN ARCHITECTS

301 N BROOM STREET #100
MADISON, WI 53703
608-819-0260 PHONE
www.opnarchitects.com
opn@opnarchitects.com

All reports, plans, specifications, computer files, field data, notes and other documents and instruments prepared by OPN Architects, Inc. as instruments of service shall remain the property of OPN Architects, Inc. OPN Architects, Inc. shall retain all common law, statutory and other reserved rights, including the copyright thereto.

© 2017 OPN Architects, Inc.

Owner
City of Madison Fire Department
314 W. Dayton St.
Madison, WI 53703

Project
Madison Fire Station 14
3201 Dairy Drive
Madison, WI 53718

Civil Engineer
Snyder & Associates, Inc
5010 Voges Rd
Madison WI, 53718
P. 608-838-0444

Structural Engineer
IMEG
1800 Deming Way #200
Middleton, WI 53562
P. 608-223-0444

Mechanical Engineer
IMEG
1800 Deming Way #200
Middleton, WI 53562
P. 608-223-0444

Electrical Engineer
IMEG
1800 Deming Way #200
Middleton, WI 53562
P. 608-223-0444

Key Plan

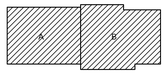

Sheet Issue Date	
BID DOCUMENTS	11/03/17

Revision	Date

BID DOCUMENTS

Drawing
LANDSCAPE PLAN ENLARGEMENTS

City of Madison Contract No. **8027**
OPN Project No. **17207000**

L152

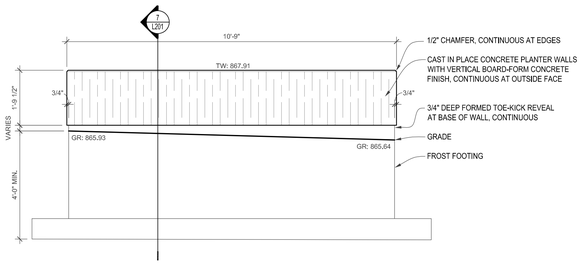

1 PLANTER WALL ELEVATION
1/2" = 1'-0"

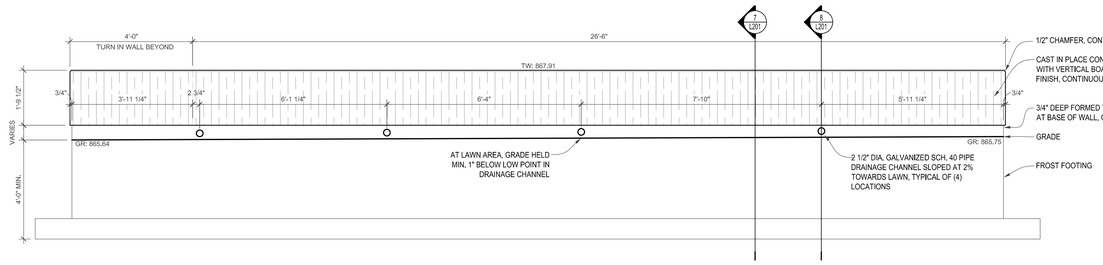

2 PLANTER WALL ELEVATION
1/2" = 1'-0"

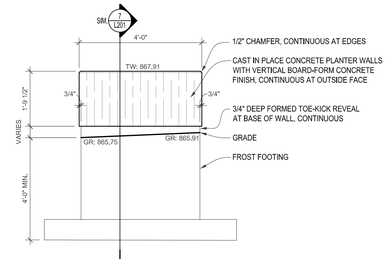

3 PLANTER WALL ELEVATION
1/2" = 1'-0"

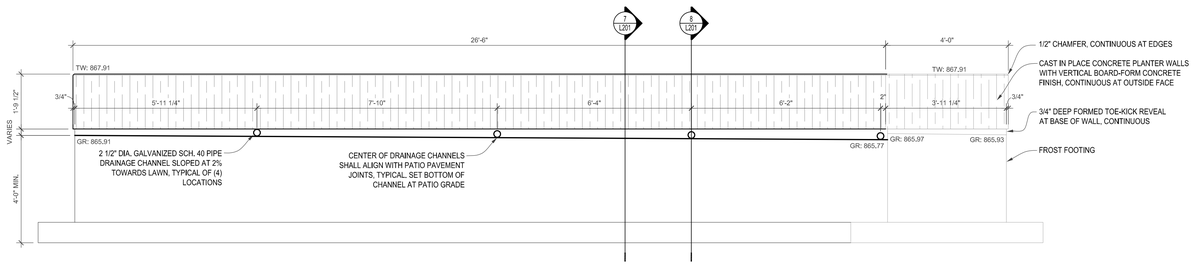

4 PLANTER WALL ELEVATION
1/2" = 1'-0"

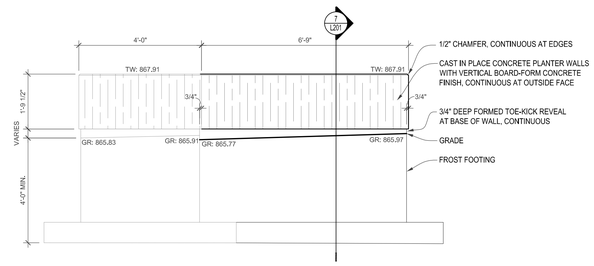

5 PLANTER WALL ELEVATION
1/2" = 1'-0"

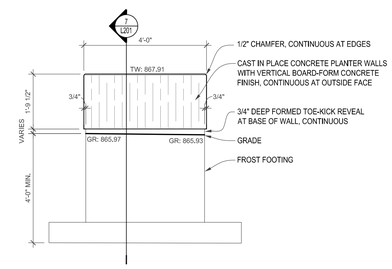

6 PLANTER WALL ELEVATION
1/2" = 1'-0"

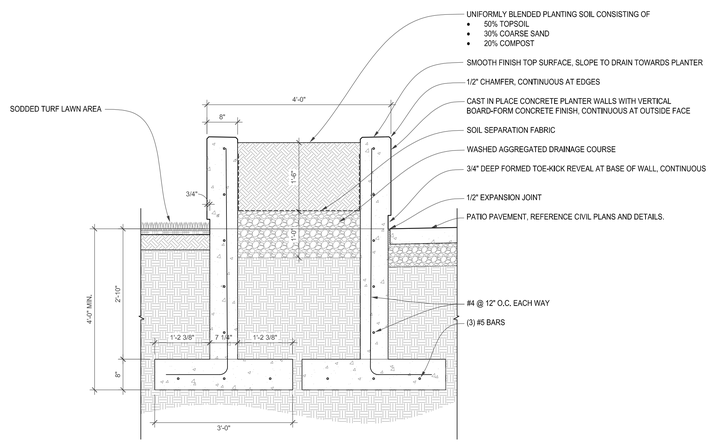

7 PLANTER WALL SECTION
3/4" = 1'-0"

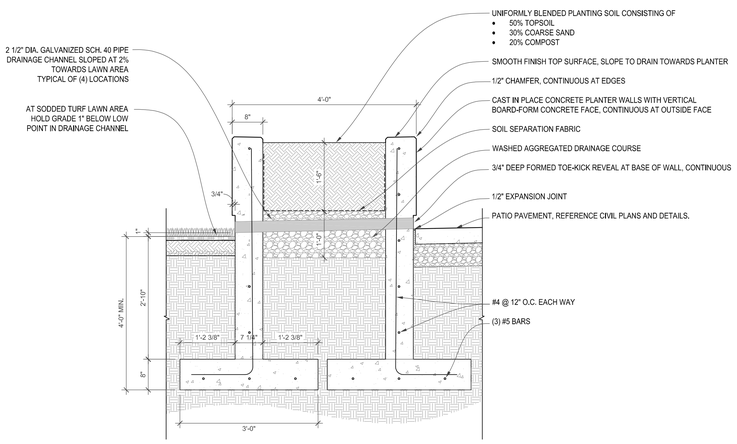

8 PLANTER WALL SECTION AT DRAINAGE CHANNEL
3/4" = 1'-0"

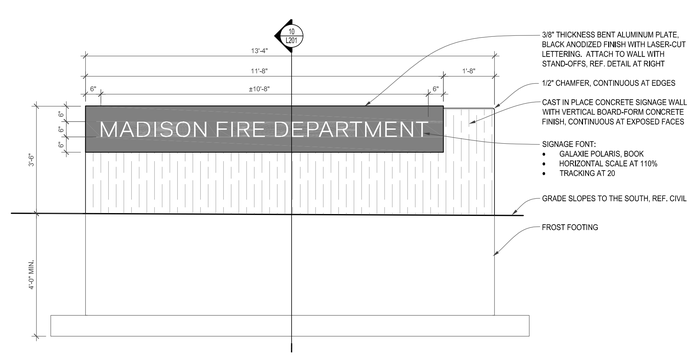

9 MONUMENT SIGN WALL ELEVATION
1/2" = 1'-0"

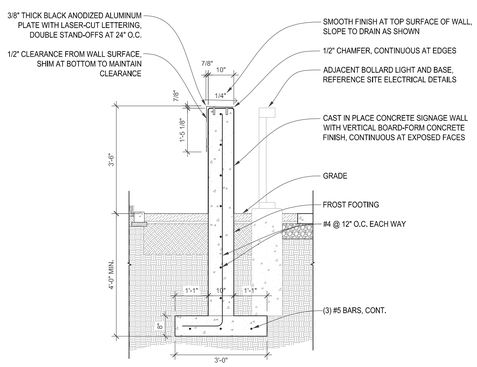

10 MONUMENT SIGN WALL SECTION
1/2" = 1'-0"

OPN ARCHITECTS
301 N BROOM STREET #100
MADISON, WI 53703
608-819-0260 PHONE
www.opnarchitects.com
opn@opnarchitects.com

All reports, plans, specifications, computer files, field data, notes and other documents and instruments prepared by OPN Architects, Inc. as instruments of service shall remain the property of OPN Architects, Inc. OPN Architects, Inc. shall retain all common law, statutory and other reserved rights, including the copyright thereto.

© 2017 OPN Architects, Inc.

Owner
City of Madison Fire Department
314 W. Dayton St.
Madison, WI 53703

Project
Madison Fire Station 14
3201 Dairy Drive
Madison, WI 53718

Civil Engineer
Snyder & Associates, Inc
5010 Voges Rd
Madison WI, 53718
P. 608-838-0444

Structural Engineer
IMEG
1800 Deming Way #200
Middleton, WI 53562
P. 608-223-0444

Mechanical Engineer
IMEG
1800 Deming Way #200
Middleton, WI 53562
P. 608-223-0444

Electrical Engineer
IMEG
1800 Deming Way #200
Middleton, WI 53562
P. 608-223-0444

Key Plan

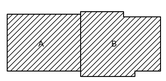

Sheet Issue Date	
BID DOCUMENTS	11/03/17

Revision	Date

BID DOCUMENTS

Drawing
LANDSCAPE ELEVATIONS

City of Madison Contract No. **8027**
OPN Project No. **17207000**

L201

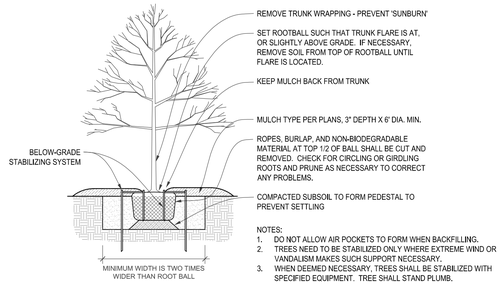

NOTES:
1. DO NOT ALLOW AIR POCKETS TO FORM WHEN BACKFILLING.
2. TREES NEED TO BE STABILIZED ONLY WHERE EXTREME WIND OR VANDALISM MAKES SUCH SUPPORT NECESSARY.
3. WHEN DEEMED NECESSARY, TREES SHALL BE STABILIZED WITH SPECIFIED EQUIPMENT. TREE SHALL STAND PLUMB.

1 DECIDUOUS TREE PLANTING
1/2" = 1'-0"

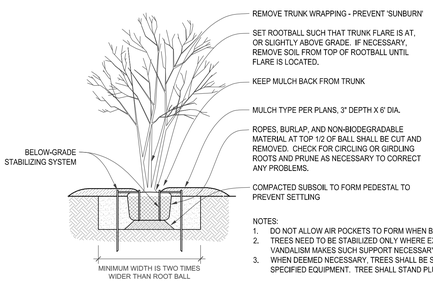

NOTES:
1. DO NOT ALLOW AIR POCKETS TO FORM WHEN BACKFILLING.
2. TREES NEED TO BE STABILIZED ONLY WHERE EXTREME WIND OR VANDALISM MAKES SUCH SUPPORT NECESSARY.
3. WHEN DEEMED NECESSARY, TREES SHALL BE STABILIZED WITH SPECIFIED EQUIPMENT. TREE SHALL STAND PLUMB.

2 MULTI-STEM TREE PLANTING
1/2" = 1'-0"

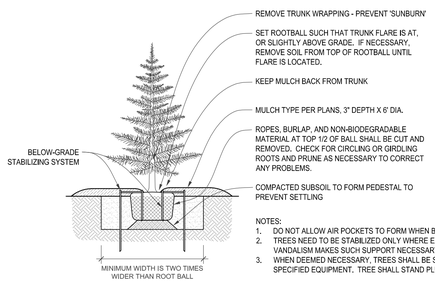

NOTES:
1. DO NOT ALLOW AIR POCKETS TO FORM WHEN BACKFILLING.
2. TREES NEED TO BE STABILIZED ONLY WHERE EXTREME WIND OR VANDALISM MAKES SUCH SUPPORT NECESSARY.
3. WHEN DEEMED NECESSARY, TREES SHALL BE STABILIZED WITH SPECIFIED EQUIPMENT. TREE SHALL STAND PLUMB.

3 EVERGREEN TREE PLANTING
1/2" = 1'-0"

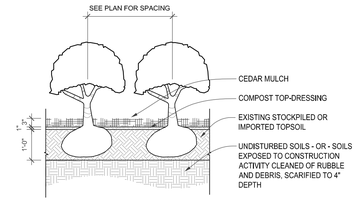

NOTES:
1. REMOVE ANY EXISTING VEGETATION, BARRIER FABRIC, OR ROCK WITHIN PLANTING AREA PRIOR TO PREPARATION ACTIVITIES
2. SCARIFY SUBSOIL TO A DEPTH OF 4"
3. PLACE 12" OF TOPSOIL
4. TOP DRESS ALL PLANTING AREAS WITH 1" COMPOST
5. MIX EXISTING OR IMPORTED PLACED TOPSOIL AND COMPOST TOP DRESSING TOGETHER TO A TOTAL DEPTH OF 6"
6. RAKE AND SMOOTH SOIL TO 3" BELOW FINISH GRADE REMOVING ROCKS, ROOTS, CLUMPS, AND ALL OTHER DEBRIS.

4 SHRUB OR PERENNIAL PLANTING
1/2" = 1'-0"

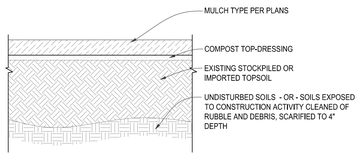

NOTES:
1. REMOVE ANY EXISTING VEGETATION, BARRIER FABRIC, OR ROCK WITHIN PLANTING AREA PRIOR TO PREPARATION ACTIVITIES
2. SCARIFY SUBSOIL TO A DEPTH OF 4"
3. PLACE TOPSOIL
4. TOP DRESS ALL PLANTING AREAS WITH 1" COMPOST
5. MIX EXISTING OR IMPORTED PLACED TOPSOIL AND COMPOST TOP DRESSING TOGETHER TO A TOTAL DEPTH OF 6"
6. RAKE AND SMOOTH SOIL TO 3" BELOW FINISH GRADE REMOVING ROCKS, ROOTS, CLUMPS, AND ALL OTHER DEBRIS.

5 PLANTING BED PREP.
1" = 1'-0"

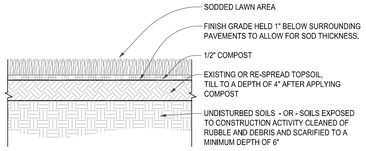

NOTES:
1. REMOVE ANY EXISTING VEGETATION WITHIN PLANTING AREA PRIOR TO PREPARATION ACTIVITIES
2. SCARIFY SUBGRADE TO A MINIMUM DEPTH OF 6"
3. PLACE TOPSOIL
4. TOP DRESS ALL LAWN AREAS WITH 1/2" COMPOST
5. TILL EXISTING OR PLACED TOPSOIL AND COMPOST TOGETHER TO A TOTAL DEPTH OF 4"
6. RAKE AND SMOOTH SOIL TO FINISH GRADE REMOVING ROCKS, ROOTS, CLUMPS, AND ALL OTHER DEBRIS.
7. LIGHTLY ROLL SOIL
8. SPREAD STARTER FERTILIZER
9. LAY SOD
10. LIGHTLY ROLL SODDED AREAS TO INCREASE SOIL TO SOD CONTACT
11. WATER AREAS IMMEDIATELY AND THOROUGHLY

6 SODDED LAWN
1" = 1'-0"

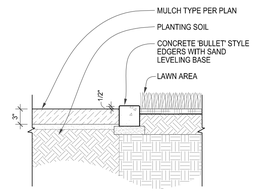

7 LANDSCAPE EDGING
1" = 1'-0"

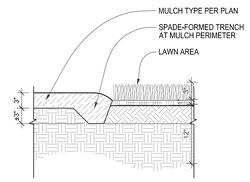

8 SPADE EDGE
1" = 1'-0"

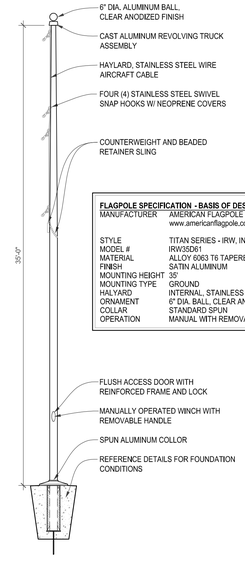

FLAGPOLE SPECIFICATION - BASIS OF DESIGN

MANUFACTURER	AMERICAN FLAGPOLE www.americanflagpole.com
STYLE	TITAN SERIES - IRW, INTERNAL REINFORCED WITH WINCH
MODEL #	IRW35DR1
MATERIAL	ALLOY 6063 T6 TAPERED ALUMINUM TUBE, 1 SECTION
FINISH	SATIN ALUMINUM
MOUNTING HEIGHT	35'
MOUNTING TYPE	GROUND
HALYARD	INTERNAL, STAINLESS STEEL AIRCRAFT CABLE
ORNAMENT	6" DIA. BALL, CLEAR ANODIZED FINISH
COLLAR	STANDARD SPUN
OPERATION	MANUAL WITH REMOVABLE HANDLE

9 FLAGPOLE
1/4" = 1'-0"

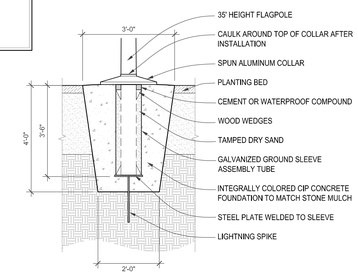

10 FLAGPOLE FOUNDATION
NTS

BENCH SPECIFICATION

MANUFACTURER:	FORMS + SURFACES T: 1-800-451-0410 www.forms-surfaces.com
STYLE:	CIRCUIT BENCH
MODEL #	SBCIR-72T
MOUNTING STYLE:	SURFACE MOUNT WITH LEVELERS
FRAME FINISH:	SLATE TEXTURE
SEAT MATERIAL:	RECLAIMED TEAK HARDWOOD SLATS

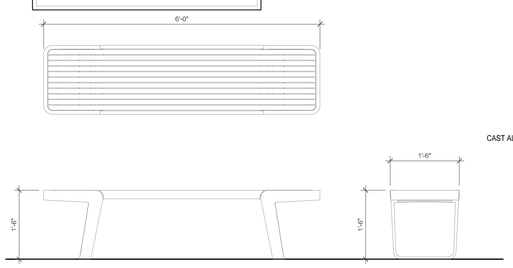

11 SITE BENCH
3/4" = 1'-0"

BICYCLE RACK SPECIFICATION

MANUFACTURER	FORMS + SURFACES 800.451.0410 www.forms-surfaces.com
STYLE	CAPITOL
MODEL #	SICAP
COLOR	SLATE TEXTURE

NOTE:
BICYCLE RACK MEETS ASSOCIATION OF PEDESTRIAN AND BICYCLE PROFESSIONALS (APBP) GUIDELINES FOR SECURITY AND FUNCTIONALITY. ALLOWS FOR STANDARD U-LOCK USE.

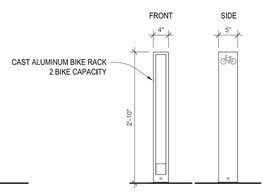

12 BICYCLE RACKS
3/4" = 1'-0"

LITTER RECEPTACLE SPECIFICATION

MANUFACTURER:	FORMS + SURFACES T: 1-800-451-0410 www.forms-surfaces.com
STYLE:	DISPATCH LITTER RECEPTACLE
CAPACITY:	36 GALLON, SINGLE STREAM
LID GRAPHICS:	LITTER, BOTH SIDES
MOUNTING STYLE:	SURFACE MOUNT
LATCH STYLE:	STAINLESS STEEL LIFT LEVER
BODY FINISH:	SLATE TEXTURE
LID FINISH:	SLATE TEXTURE

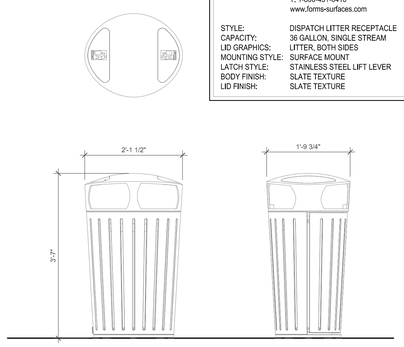

13 LITTER RECEPTACLE
3/4" = 1'-0"

CAFE SEATING CHAIR SPECIFICATION

MANUFACTURER:	FORMS + SURFACES T: 1-800-451-0410 www.forms-surfaces.com
STYLE:	AVIVO CHAIR, WITH ARMRESTS
COLOR:	CUSTOM, RAL 3011 'BRAUNROT/BROWN RED'
PERFORATION:	RIVA

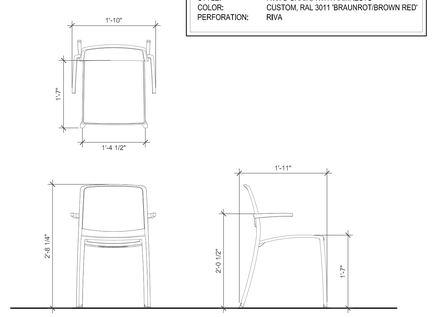

14 CAFE SEATING - CHAIR
3/4" = 1'-0"

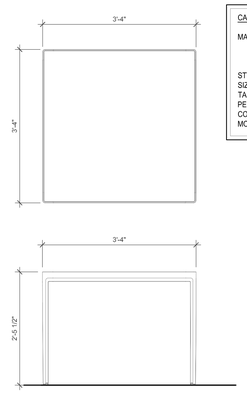

CAFE SEATING TABLE SPECIFICATION

MANUFACTURER:	FORMS + SURFACES T: 1-800-451-0410 www.forms-surfaces.com
STYLE:	AVIVO TABLE
SIZE:	40" x 40"
TABLE TOP INSERT:	ALUMINUM
PERFORATION:	RIVA
COLOR:	SLATE TEXTURE
MOUNTING:	FREESTANDING

15 CAFE SEATING - TABLE
3/4" = 1'-0"

OPN ARCHITECTS
301 N BROOM STREET #100
MADISON, WI 53703
608-819-0260 PHONE
www.opnarchitects.com
opn@opnarchitects.com

All reports, plans, specifications, computer files, field data, notes and other documents and instruments prepared by OPN Architects, Inc. as instruments of service shall remain the property of OPN Architects, Inc. OPN Architects, Inc. shall retain all common law, statutory and other reserved rights, including the copyright thereto.

© 2017 OPN Architects, Inc.

Owner
City of Madison Fire Department
314 W. Dayton St.
Madison, WI 53703

Project
Madison Fire Station 14
3201 Dalry Drive
Madison, WI 53718

Civil Engineer
Snyder & Associates, Inc
5010 Voges Rd
Madison WI, 53718
P. 608-838-0444

Structural Engineer
IMEG
1800 Deming Way #200
Middleton, WI 53562
P. 608-223-0444

Mechanical Engineer
IMEG
1800 Deming Way #200
Middleton, WI 53562
P. 608-223-0444

Electrical Engineer
IMEG
1800 Deming Way #200
Middleton, WI 53562
P. 608-223-0444

Key Plan

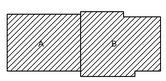

Sheet Issue Date	
BID DOCUMENTS	11/03/17

Revision	Date

BID DOCUMENTS

Drawing
LANDSCAPE DETAILS

City of Madison Contract No. **8027**
OPN Project No. **17207000**

L301

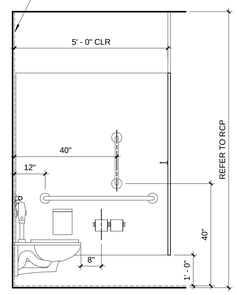

NOTE: DOOR TO BE 32" CLR.

ACCESSIBLE TOILET STALL MOUNTING HEIGHTS AND DETAILS

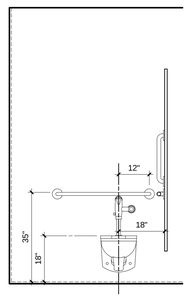

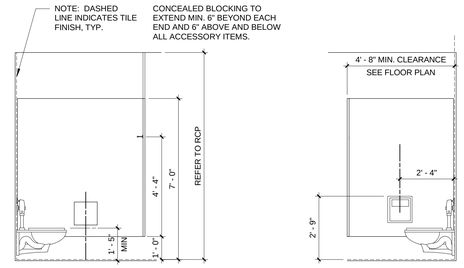

STANDARD TOILET STALL MOUNTING HEIGHTS AND DETAILS

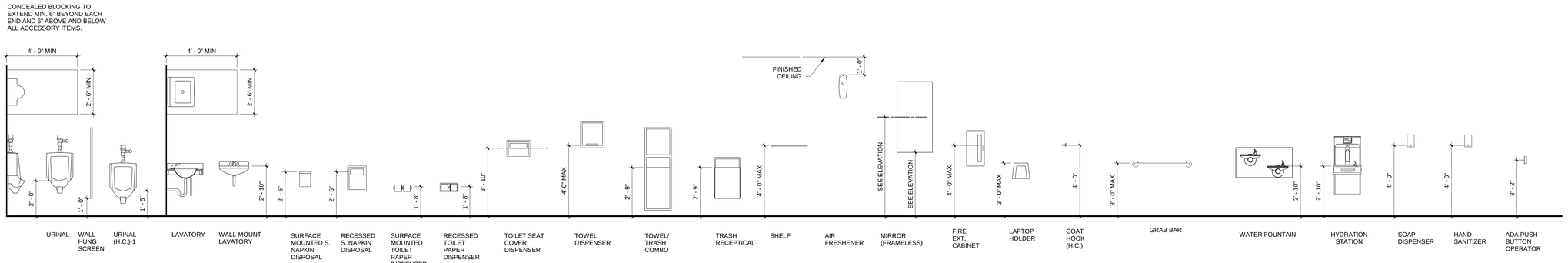

STANDARD MOUNTING HEIGHTS

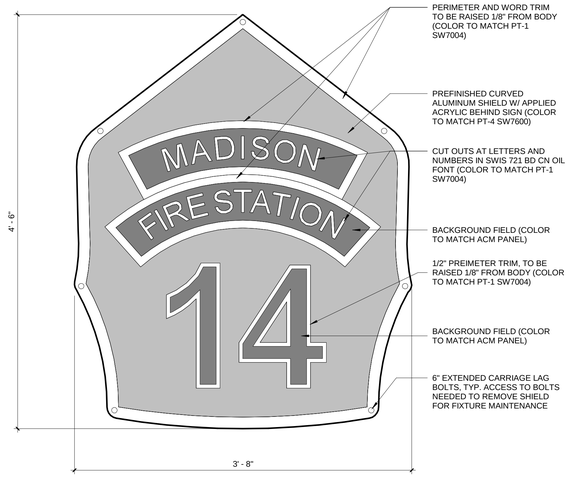

1 BADGE DETAIL
1 1/2" = 1'-0"

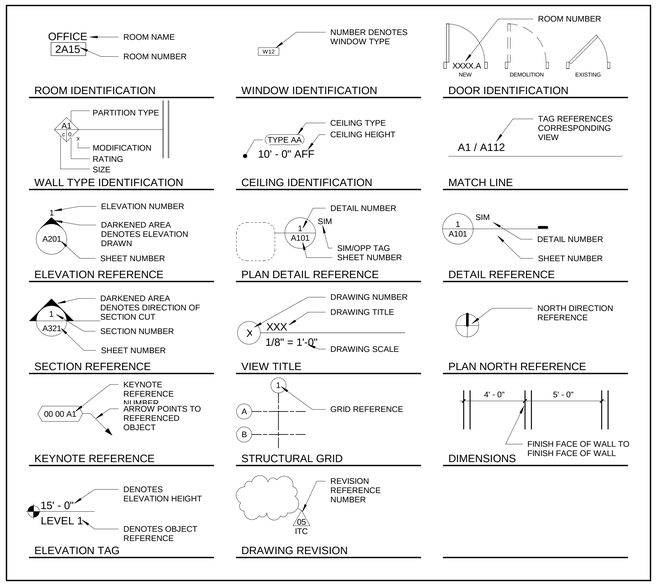

STANDARD SYMBOLS

#	NUMBER	EX	EXISTING	OTS	OPEN TO STRUCTURE
ACM	ALUMINUM COMPOSITE METAL	FD	FLOOR DRAIN	PCT	PORCELAIN CERAMIC TILE
ACP	ACOUSTICAL CEILING PANEL	FF	FACTORY FINISH	PL	PLATE
AFF	ABOVE FINISH FLOOR	FFE	FINISHED FLOOR ELEVATION	PLAM	PLASTIC LAMINATE
BAS	BUILDING AUTOMATION SYSTEM	FOC	FACE OF CURB	PVC	POLY VINYL CHLORIDE
BC	BOTTOM OF CURB	GA	GAUGE	PT	PAINT
BM	BENCH MARK	GALV	GALVANIZED	QT	QUARTZ
BOC	BACK OF CURB	GC	GENERAL CONTRACTOR	RAD	RADIUS
BOS	BOTTOM OF STEEL	GHM	GALVANIZED HOLLOW METAL	RD	ROOF DRAIN
BOW	BOTTOM OF WALL	GL	GLASS	RAF	RESILIENT ATHLETIC FLOORING
BRG	BEARING	GT	GROUT	REX	RESIN
BS	BOTTOM OF STAIR	GWB	GYPSUM WALL BOARD	REV	REVISION
C	CHANNEL	GYP	GYPSUM	RO	ROUGH OPENING
CG	CORNER GUARD	HORZ	HORIZONTAL	ROW	RIGHT-OF-WAY
CJ	CONTROL JOINT	HM	HOLLOW METAL	RUB	RUBBER
CL	CENTER LINE	HT	HEIGHT	SF	SQUARE FEET
CLG	CEILING	HVAC	HEATING/VENTING/AIR CONDITIONING	SIM	SIMILAR
CLL	CONSTRUCTION LIMITS LINE	ID	INSIDE DIAMETER	SS	SOLID SURFACE
CMU	CONCRETE MASONRY UNIT	L	ANGLE	STN	STONE
CO	CLEANOUT	LB/LBS	POUND / POUNDS	ST STL	STAINLESS STEEL
CONC	CONCRETE	LVT	LUXURY VINYL TILE	SUSP	SUSPENDED
CONT	CONTINUOUS	MAX	MAXIMUM	T&G	TONGUE AND GROOVE
CPT	CARPET	MB	MARKERBOARD	TOC	TOP OF CURB
CRK	CORK	MC	MECHANICAL CONTRACTOR	TOM	TOP OF MASONRY
DEMO	DEMOLISH / DEMOLITION	MDF	MEDIUM DENSITY FIBERBOARD	TOS	TOP OF SLAB / TOP OF STEEL
DF	DRINKING FOUNTAIN	MFR	MANUFACTURERS	TOW	TOP OF WALL
DIA	DIAMETER	MH	MANHOLE	TP	TOILET PARTITION
DN	DOWN	MIL	MIL THICKNESS	TS	TOP OF STAIR
DS	DOWNSPOUT	MIN	MINIMUM	UL	UNDERWRITERS LABORATORIES, INC.
EC	ELECTRICAL CONTRACTOR	MO	MASONRY OPENING	UNO	UNLESS NOTED OTHERWISE
EIFS	EXTERIOR INSULATION FINISH SYSTEM	NIC	NOT IN CONTRACT	VERT	VERTICAL
EJ	EXPANSION JOINT	NTS	NOT TO SCALE	VIF	VERIFY IN FIELD
ELEC	ELECTRICAL	OC	ON CENTER	WB	WALL BASE
ELEV	ELEVATION	OA	OVERALL	W/	WITH
EPF	EPOXY FLOORING	OD	OUTSIDE DIAMETER	W/0	WITHOUT
EPT	EPOXY PAINT	OFCI	OWNER FURNISHED CONTRACTOR INSTALLED	WD	WOOD
EQ	EQUAL	OH	OVERHEAD	WP	WALL PROTECTION
EWC	ELECTRIC WATER COOLER	ORD	OVERFLOW ROOF DRAIN	WT	WINDOW TREATMENT
				WWF	WELDED WIRE FABRIC

STANDARD ABBREVIATIONS

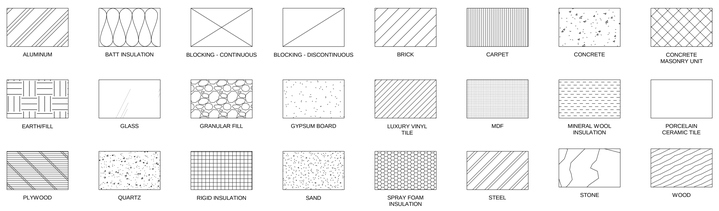

STANDARD MATERIAL DEFINITIONS

OPN ARCHITECTS

301 N BROOM STREET #100
MADISON, WI 53703
608-819-0260 PHONE
www.opnarchitects.com
opn@opnarchitects.com

All reports, plans, specifications, computer files, field data, notes and other documents and instruments prepared by OPN Architects, Inc. as instruments of service shall remain the property of OPN Architects, Inc. OPN Architects, Inc. shall retain all common law, statutory and other reserved rights, including the copyright thereto.

© 2017 OPN Architects, Inc.

Owner

City of Madison Fire Department

314 W. Dayton St.
Madison, WI 53703

Project

Madison Fire Station 14

3201 Dairy Drive
Madison, WI 53718

Civil Engineer

Snyder & Associates, Inc

5010 Voges Rd
Madison WI, 53718
P. 608-838-0444

Structural Engineer

IMEG

1800 Deming Way #200
Middleton, WI 53562
P. 608-223-0444

Mechanical Engineer

IMEG

1800 Deming Way #200
Middleton, WI 53562
P. 608-223-0444

Electrical Engineer

IMEG

1800 Deming Way #200
Middleton, WI 53562
P. 608-223-0444

Key Plan

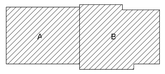

Sheet Issue Date	
BID DOCUMENTS	11/03/17

Revison	Date

BID DOCUMENTS

Drawing

GENERAL DRAWING INFORMATION

City of Madison Contract No. **8027**
OPN Project No. **17207000**

A001

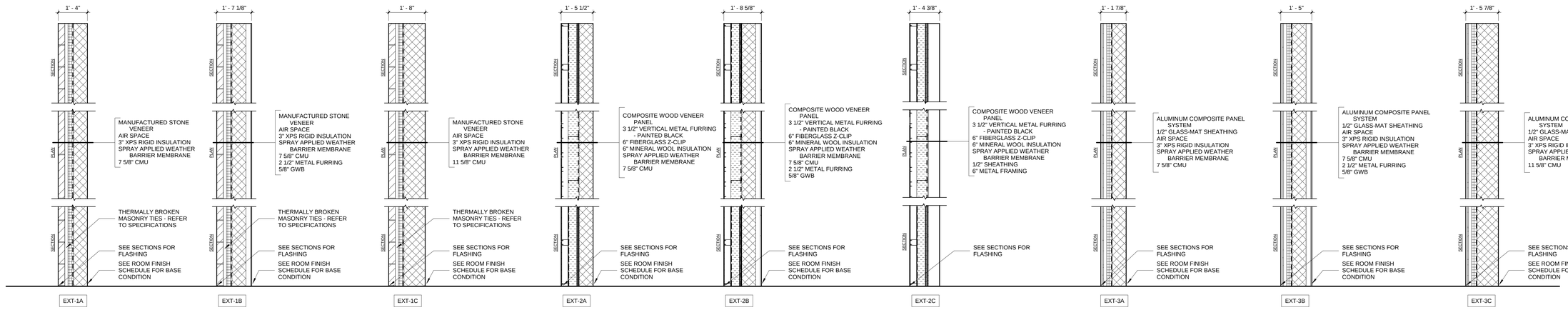

1 WALL TYPES - EXTERIOR
1/2" = 1'-0"

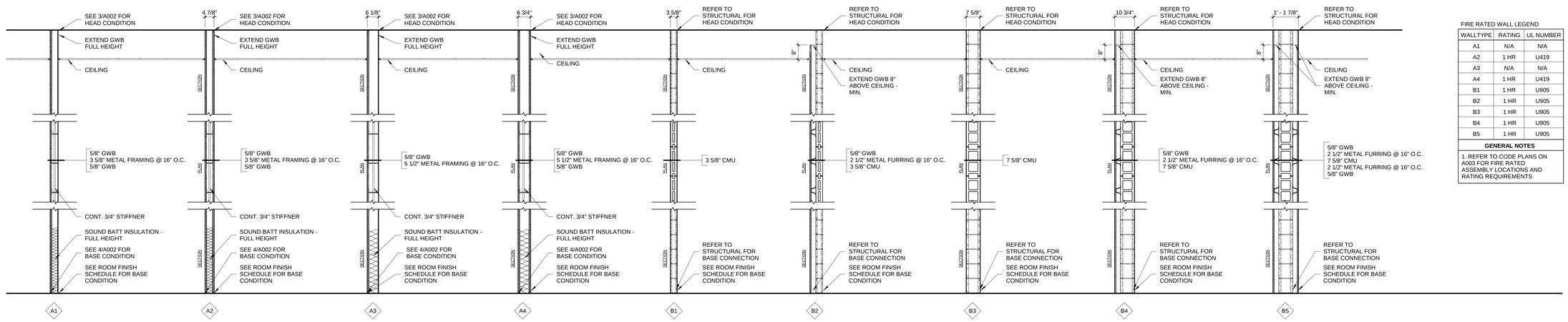

FIRE RATED WALL LEGEND

WALLTYPE	RATING	UL NUMBER
A1	N/A	N/A
A2	1 HR	U419
A3	N/A	N/A
A4	1 HR	U419
B1	1 HR	U905
B2	1 HR	U905
B3	1 HR	U905
B4	1 HR	U905
B5	1 HR	U905

GENERAL NOTES

1. REFER TO CODE PLANS ON A003 FOR FIRE RATED ASSEMBLY LOCATIONS AND RATING REQUIREMENTS

2 WALL TYPES - INTERIOR
1/2" = 1'-0"

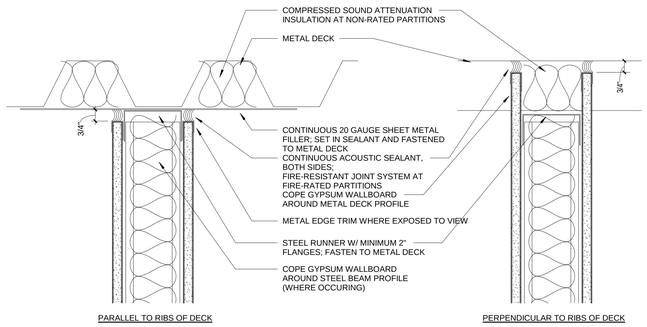

NOTE:
FASTEN STEEL RUNNER TO METAL DECK; FRICTION FIT METAL STUDS TO RUNNER AND FASTEN GYPSUM WALLBOARD TO STUDS (DO NOT FASTEN TO RUNNER); MAINTAIN GAP AS INDICATED BETWEEN METAL DECK AND METAL STUD / GYPSUM WALLBOARD TO ACCOMODATE DEFLECTION OF STRUCTURE

3 TYPICAL HEADS AT METAL STUD PARTITIONS
3" = 1'-0"

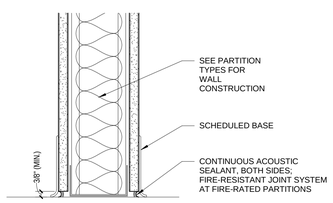

4 TYPICAL BASE AT METAL STUD PARTITIONS
3" = 1'-0"

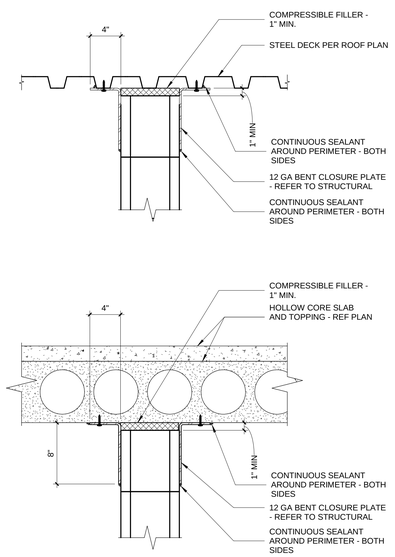

6 TYPICAL HEADS AT CMU PARTITIONS
1 1/2" = 1'-0"

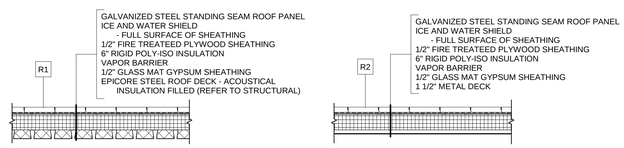

5 ROOF TYPES
1/2" = 1'-0"

OPN ARCHITECTS
301 N BROOM STREET #100
MADISON, WI 53703
608-819-0260 PHONE
www.opnarchitects.com
opn@opnarchitects.com

All reports, plans, specifications, computer files, field data, notes and other documents and instruments prepared by OPN Architects, Inc. as instruments of service shall remain the property of OPN Architects, Inc. OPN Architects, Inc. shall retain all common law, statutory and other reserved rights, including the copyright thereto.

© 2017 OPN Architects, Inc.

Owner
City of Madison Fire Department
314 W. Dayton St.
Madison, WI 53703

Project
Madison Fire Station 14
3201 Dairy Drive
Madison, WI 53718

Civil Engineer
Snyder & Associates, Inc
5010 Voges Rd
Madison WI, 53718
P. 608-838-0444

Structural Engineer
IMEG
1800 Deming Way #200
Middleton, WI 53562
P. 608-223-0444

Mechanical Engineer
IMEG
1800 Deming Way #200
Middleton, WI 53562
P. 608-223-0444

Electrical Engineer
IMEG
1800 Deming Way #200
Middleton, WI 53562
P. 608-223-0444

Key Plan

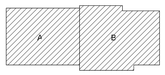

Sheet Issue Date
BID DOCUMENTS 11/03/17

Revision Date

BID DOCUMENTS

Drawing
ASSEMBLY TYPES

City of Madison Contract No. **8027**
OPN Project No. **17207000**

A002

Code Summary

Applicable Code
Wisconsin Commercial Building Code - Wisconsin Department of Safety and Professional Services Chapters SPS 360- SPS 366 incorporating:
International Building Code 2009
International Energy Conservation Code 2009
International Mechanical Code 2009
International Fuel Gas Code 2009
International Existing Building Code 2009
ICC/ANSI Standard A117.1 for Accessibility

Building Description
The City of Madison Fire Department Station 14 is a proposed new structure comprised of approximately 19,232 GSF on 1 story and a 2,526 GSF mezzanine. Station 14 represents a hybrid as a City of Madison Fire Department training facilities and a functioning station, including a community room/training room.

Proposed Uses include: Apparatus bays (6), offices, kitchen, fitness and sleeping facilities for fire personnel, and a multipurpose training and community room.

Occupancy Classification: B (with Separated and Non-separated uses)
Type of Construction: II-B
Building Height: 30'-0" – One Story

Proposed Building will be have an Automatic Sprinkler System per IBC Section 903.

Total Gross Building Area: 19,232 GSF*
Total Fire Area: 21,758 GSF**

***505.1 General -** A mezzanine or mezzanines in compliance with section 505 shall be considered a portion of a story in which it is contained. Such mezzanines shall not contribute to either the building area or number of stories as regulated by Section 503.1. ...

****505.1 General (Cont) -** The area of the mezzanine shall be included in determining the fire area defined in Section 902.

Building Code Summary

Chapter 3 – Use and Occupancy Classification
303 Assembly Group A-3 - Occupancy consists of a duel-functioning training room and community room, capacity based unconcentrated seating of 15 SF per occupant.

304 Business Group B - Occupancy includes: offices, work rooms, small storage rooms, training and meeting rooms, day and break rooms, restrooms, and building support rooms.

310 Residential Group R-2 - Occupancy includes sleeping rooms for fire fighting personnel.

311.3 Storage Group S-2 - Occupancy for low-hazard storage of fire fighting vehicles and apparatus, and equipment.

Chapter 4 – Special Detailed Requirements Based on Use and Occupancy
420.2 Group R Separation Walls - Walls separating dwelling units in the same building, walls separating sleeping units in the same building and walls separating dwelling or sleepin gunits from other occupancies contiguous to them in the same building shall abe constructed as fire partitions in accordance with Section 709.

709.3 Fire-resistance rating - Fire Partitions shall have a fire-resistance rating of not less than 1 hour.

Excpetion 2 - Dwelling units and sleeping units separations in buildings of Type IIB...construction shall have fire-resistance rating of not less than 1/2-hour in building equipped throughout with an automatic sprinkler system in accordnace with Section 903.3.1.1.

Chapter 5 – General Building Heights and Areas
508.3.1 - Non-Separated Occupancies - Building or portions of building that comply with the provision of this section shall be considered as non-separated occupancies.

508.3.2 - Allowable building area and height - The allowable building area and height of the building or portion thereof shall be based on the most restrictive allowances for the occupancy groups under consideration for the type of construction of the building in accorance with Section 503.1.

The most restrictive height and area allowances for Madison Fire Station 14 is Occupancy B. For the purposes of height and area calculations Occupancy Group B shall be utilized. Areas with S-2 occupancy shall be treated as NON-SEPARATED occupancies. Occupancy Groups A-3 and R-2 shall be treated as accessory occupancies to the main occupancy as they each represent less than 10 percent of the First Floor building area.

The seperation walls for the dwelling units are still required to comply with 420.2.

Table 503 – Allowable Building Height in Feet above the Grade Plane
Occupancy Group B or Type II-B Construction with Spinkler System Increase per 504.2

	Allowable	Proposed
Height	75 ft	*<30 ft*
Stories	4 Stories	*1 Story*
Area	69,000 sf	*19,232 sf*

The proposed Madison Fire Station 14 complies with the allowable buiding heights and areas when classified as B occupancy.

505.1 (Mezzanines) General - A mezzanine or mezzanines in compliance with Section 505 shall be considered a portion of the story in which it is contained. Such mezzaninse shall not contribue to either the building area or numver of stories as regulated by Section 503.1

505.2 Area Limitations - The aggregate area of a mezzanine or mezzanines within a room shall not exceed one-third of the floor area of that room or space in which they are located.

505.3 Egress - Each occupant of a mezzanine shall have access to at least two independent means of egress where the common path of egress travel exceeds the limitations of Section 1014.3

Exception - A Single means of egress shall be permitted in accordance with Section 1015.1

1015.1 Exits or exit access doorways from spaces - two exits or exit access doorways from any space shall be provided where one of the following conditions exists:

Exception - Where a building contains mixed occupancies, each individual occupancy shall comply with the applicable requirements for that occupancy.

Table 1015.1 Spaces with one exit or exit access doorway

A,B	= 49 Occupants
R	= 10 Occupants
S	= 29 Occupants

The mezzanine for the Madison Fire Station 14 has an occupancy of less than 10. This is compliant with the strictest occupancy limits in table 1015.1 therefore one exit out of the mezzanine is permitted.

505.4 Openness - A mezzanine shall be open and unobstructed to the room in which such mezzanine is located except for walls not more than 42 inches high, columns and posts.

Exception 1 - Mezzanines or portions thereof are not required to be open to the roomm in which the mezzanines are located, provided taht the occupant load of the aggregate area of the enclosed space does not exceed 10.

The mezzanine for the Madison Fire Station 14 has an occupancy of less than 10. Therefore closing portions of the mezzanine for fire fighter trainingis permitted.

Chapter 6 – Types of Construction
Table 601 Fire-Resistance Rating Requirements for Building Elements
Type II-B Construction:

0HR	Primary Structural Frame
0HR	Exterior Bearing Walls
0HR	Interior Bearing Walls
0HR	Non-bearing walls and partitions Exterior
0HR	Non-bearing walls and partitions Interior
0HR	Floor construction and associated secondary members
0HR	Roof Construction and associated secondary members

Table 602 Fire-Resistance Rating for Exterior Walls Based on Fire Separation Distance
The exterior walls for the proposed Madison Fire Station 14 are to be a distance of at least 30' from the nearest property line (or centerline of street).

Per Table 602, a B-Occupancy Type II-B Construction requires 0-HR rating for exterior walls.

Chapter 7 – Fire and Smoke Protection Features
705.8.1 Allowable area of openings - The maximum are of unprotected and protected openings permitted in an exterior wall in any story of a building shall not exceed the the percentages specified in Table 705.8.

Exception 2 - Buildings whose exterior bearing walls, exterior nonbearing walls and exterior primary stuctural frame are not required to be fire-resistance rated shall be permitted to have unlimited unprotected openings.

705.11 Parapets - Parapets shall be provided on exterior walls of buidings.

Exception 1 - The wall is not required to be fire-resistance rated in accordance with Table 602 because of fire separation distance.

708.2.9 Shaft enclosure required - A shaft enclosure is not required for floor openings vetween a mezzanine and the floor below.

713 Penetrations - *Penetrations through fire-rated wall or floor assemblies shall meet the requirements of this Section.*

714 Fire-Resistant Joint Systems - *Joints installed in or between fire-rated wall or floor assemblies shall meet the requirements of this Section.*

715 Opening Protection - *Doors and fire shutters in fire rated assemblies shall meet the requirements of this Section. Refer to the Door Schedule.*

716 Ducts and Transfer Openings - *Duct penetrations and air transfer openings in fire-rated assemblies shall meet the requirements of this Section.*

Chapter 9 - Fire Protection Systems
The proposed Madison Fire Station 14 be fully sprinkered per 903 Automatic Sprinkler Systems.

Chapter 10 – Means of Egress
Table 1004.1.1 Occupant Load

15	Net / Occ.	= Assembly without fixed Seating
50	Gross / Occ.	= Dormitories, Fitness Rooms, Locker Rooms
100	Gross / Occ.	= Business
200	Gross / Occ	= Kitchen, Commercial
300	Gross / Occ.	= Accessory Storage areas, Mechanical Equipment, Equipment Room

First Floor Occupants = 186
Second Floor Occupants = 8
Total Occupant Load = 194

1005.1 Egress Width.

Stairway	0.3 IN/Occ x 8 Occ	= 2.4 IN Required (48 IN Provided)*
Other Exit Component	0.2 IN/Occ x 194 Occ	= 48 IN Minimum (180 IN Provided)

**2.4 IN is required occupancy multiplier for egress width. The stairway will still need to comply with the provisions 1007.1.*

1007.1 Accessible Means of Egress - Accessible means of egress shall comply with this section. Accessible spaces shall be provided with not less than one accessible means of egress. Where more than one means of egress is required by Section 1015.1 or 1019.1 from any accessible space, each accessible portion of the space shall be served by not less than two accessible means of egress.

Exception 2 - One accessible means of egress is required from an accessible mezzanine level in accordance with Section 1007.3., 1007.4 or 1007.5

The mezzanine in the proposed Madison Fire Station 14 is for mechanical equipment and storage. Per Section 1104.4, The mezzanine is not required to be an accessible mezzanine. As a result, the minimum stairway width will comply with 1009.1.

All Exits in the proposed Madison Fire Station 14 will be accessible means of egress.

1007.3 Stairways - In order to be considered part of an accessible means of egress, an exit access stairway as permitted by Section 1016.1or exit stairway shall have a clear width of 48 inches between handrails and shall either incorporate an area of refuge within an enlarged floor-level landing or ahall be access from either an area of refuge complying with Section 1007.6 or a horizontal exit.

Exception 1 - The area of refuge is not required at open exit access or exit stairways as permitted by Sections 1016.1 and 1022.1 in buildings with an automatic sprinkler system installed in accordance with Section 903.3.1.1 or 903.3.1.2.

The mezzanine stairway for the proposed Madison Fire Station 14 does not require an area of refuge.

1009.1 Stairway width - The width of stairways shall be determined as specified in Section 1005.1, but such width shall not be less than 44 inches...

Exception 1 - Stairways serving an occupant load of less than 50 shall have a width of not less than 36 inches.

The required stairway width for the mezzanine stairway for the proposed Madison Fire Station 14 is 36 inches. The proposed design complies with both the Occupant Egress width per Section 1005.1 and required minimum width per Section 1009.1.

1014.3 Common Path of Egress Travel

Exception 1 - The length of a common path of egress travel in Group B, F and S occupancies shall not be more than 100 feet, provided that the building is equipped throughout with an automatic sprinkler system installed in accordance with Section 903.3.1.1.

Table 1016.1 Exit Access Travel Distance

Occupancy Group B	= 300 FT
Occupancy Group A-3	= 250 FT
Occupancy Group S-2	= 400 FT

Table 1018.1 Corridor Fire Resistance Rating.
B and S occupancy groups with automatic sprinkler system require 0 HR .

Table 1021.1 Minimum Number of Exits for Occupant Load
Minimum two exits required for 1-500 occupant load.

1029.1 Emergency Escape and Rescue. In addition to the means of egress required by this chapter, provisions shall be made for emergency escape and rescue...shall have at least one extreior emegency exit and rescue opening in accordance with this section...

Exception 1 - In other than Group R-3 occupancies, buildings equipped throughout with an approved automatic sprinkler system in accoradance with Section 903.3.1.1.

Chapter 11 Accessibility
1104.4 Multilevel Building Accessibility. Exception 1, an accessible route is not required to mezzanines that have an aggregate area not more than 3,000 SF.

Chapter 12 Interior Environment
1207.2 Sound Transmission - Walls and partitions and floor/ceiling assemblies separating sleeping units from each other and from public or service areas shall have an STC rating not less than 50... Penetrations or openings in construction assemblies for piping, electrical devices, recessed cabinets, bathtubs, soffits, or heating, ventilation or exhaust ducts shall be sealed, lined, insulated or otherwise treated to maintain the required ratings.

Chapter 29 Plumbing Systems
Table 2902.1 Minimum Number of Required Plumbing Fixtures

Business (B)

Water Closets	= 1 per 25 for the first 50 and 1 per 50 for the remainder exceeding 50
Lavatories	= 1 per 40 for the first 80 and 1 per 80 for the remainder exceeding 80
Drinking Fountains	= 1 per 100
Other	= 1 Service Sink

194 Occupants

Water Closets	= 5 Required (8 Provided)
Lavatories	= 3 Required (8 Provided)
Drinking Fountains	= 2 Required (3 Provided)
Service Sink	= 1 Required (2 Provided)

Photovoltaic Canopy Code Summary

3105.1 General - Awnings or canopies shall comply with the requirements of this section and other applicable sections of this code.

3105.4 Canopy materials - Canopies shall be constructed of a rigid framework with an approved covering that meets the fire propagation performance criteria of NFPA 701 or has a flame spread index not greater than 25 when tested in accordance with ASTM E 84 or UL 723.

The Photovoltaic module used for Madison Fire Station 14 has a flame spread index of 6. This index classification satisfies the requirement of Canopy Materials and is permitted.

8.15.7 (NFPA 13). Exterior projections

8.15.7.2 (NFPA 13). Unless the requirements of 8.15.7.2, 8.15.7.3 or 8.15.7.4 are met, sprinklers shall be installed under exterior projections exceeding 4 ft (1.2 m) in width.

8.15.7.2 (NFPA 13). Sprinklers shall be permitted to be omitted where the exterior canopies, roofs, porte-cocheres, balconies, decks, and similar projections are constructed with materials that are non-combustible, limited-combustible, or fire retardant treated wood as defined in NFPA 703.

The Photovoltaic module, aluminum sub-girt, and steel structure used for Madison Fire Station 14 are non-combustible material per IBC 1505. This satisfies the requirements of NFPA 8.15.7.2

1505.1 General. Roof assemblies shall be divided into the classes defined below. Class A, Band C roof assemblies and roof coverings required to be listed by this section shall be tested in accordance with ASTM E 108 or UL 790. In addition, fire-retardant-treated wood roof coverings shall be tested in accordance with ASTM D 2898. The minimum roof coverings installed on buildings shall comply with Table 1505.1 based on the type of construction of the building.

Table 1505.1 Minimum Roof Covering Classification for Types of Construction
Construction Type II-B requires C* Classification

1505.8 (IBC 2015) Building-Integrated Photovoltaic Products. Building-Integrated Photovoltaic products installed as the roof covering shall be tested, listed and labeled for fire classification in accordance with Section 1505.1

1505.9 (IBC 2015) Photovoltaic Panels and Modules. Rooftop-mounted photovoltaic panel systems shall be tested, listed and identified with a fire classification in accordance with UL 1703. The fire classification shall comply with Table 1505.1 based on the type of construction of the building.

The Photovoltaic module used for Madison Fire Station 14 is A-classified according the UL 1703. This classification exceeds the C-Classification requirement outlined in Table 1505.1 and is permitted.*

No automatic sprinkler system is not required under the photovoltaic canopy.

LEVEL 1
OCCUPANT LOAD = 186
EGRESS CAPACITY = 1,080
(PROVIDED)

TOTAL FLOOR AREA = 19,232 GSF

OLF = 0 NET
OLF = 15 NET
OLF = 50 NET
OLF = 100 GROSS
OLF = 200 GROSS
OLF = 300 GROSS
EXIT

1 LEVEL 1 FLOOR PLAN
1/16" = 1'-0"

MEZZANINE
OCCUPANT LOAD = 8
EGRESS CAPACITY = 160
(PROVIDED)

TOTAL FLOOR AREA = 2,526 GSF

OLF = 0 NET
OLF = 15 NET
OLF = 50 NET
OLF = 100 GROSS
OLF = 200 GROSS
OLF = 300 GROSS
EXIT

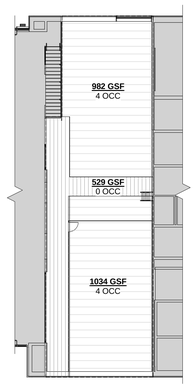

2 MEZZANINE CODE PLAN
1/16" = 1'-0"

OPN ARCHITECTS
301 N BROOM STREET #100
MADISON, WI 53703
608-819-0260 PHONE
www.opnarchitects.com
opn@opnarchitects.com

All reports, plans, specifications, computer files, field data, notes and other documents and instruments prepared by OPN Architects, Inc. as instruments of service shall remain the property of OPN Architects, Inc. OPN Architects, Inc. shall retain all common law, statutory and other reserved rights, including the copyright thereto.

© 2017 OPN Architects, Inc.

Owner
City of Madison Fire Department
314 W. Dayton St.
Madison, WI 53703

Project
Madison Fire Station 14
3201 Dairy Drive
Madison, WI 53718

Civil Engineer
Snyder & Associates, Inc
5010 Voges Rd
Madison WI, 53718
P. 608-838-0444

Structural Engineer
IMEG
1800 Deming Way #200
Middleton, WI 53562
P. 608-223-0444

Mechanical Engineer
IMEG
1800 Deming Way #200
Middleton, WI 53562
P. 608-223-0444

Electrical Engineer
IMEG
1800 Deming Way #200
Middleton, WI 53562
P. 608-223-0444

Key Plan

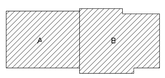

Sheet Issue Date
BID DOCUMENTS 11/03/17

Revison Date

BID DOCUMENTS

Drawing
CODE REVIEW

City of Madison Contract No. **8027**
OPN Project No. **17207000**

A003

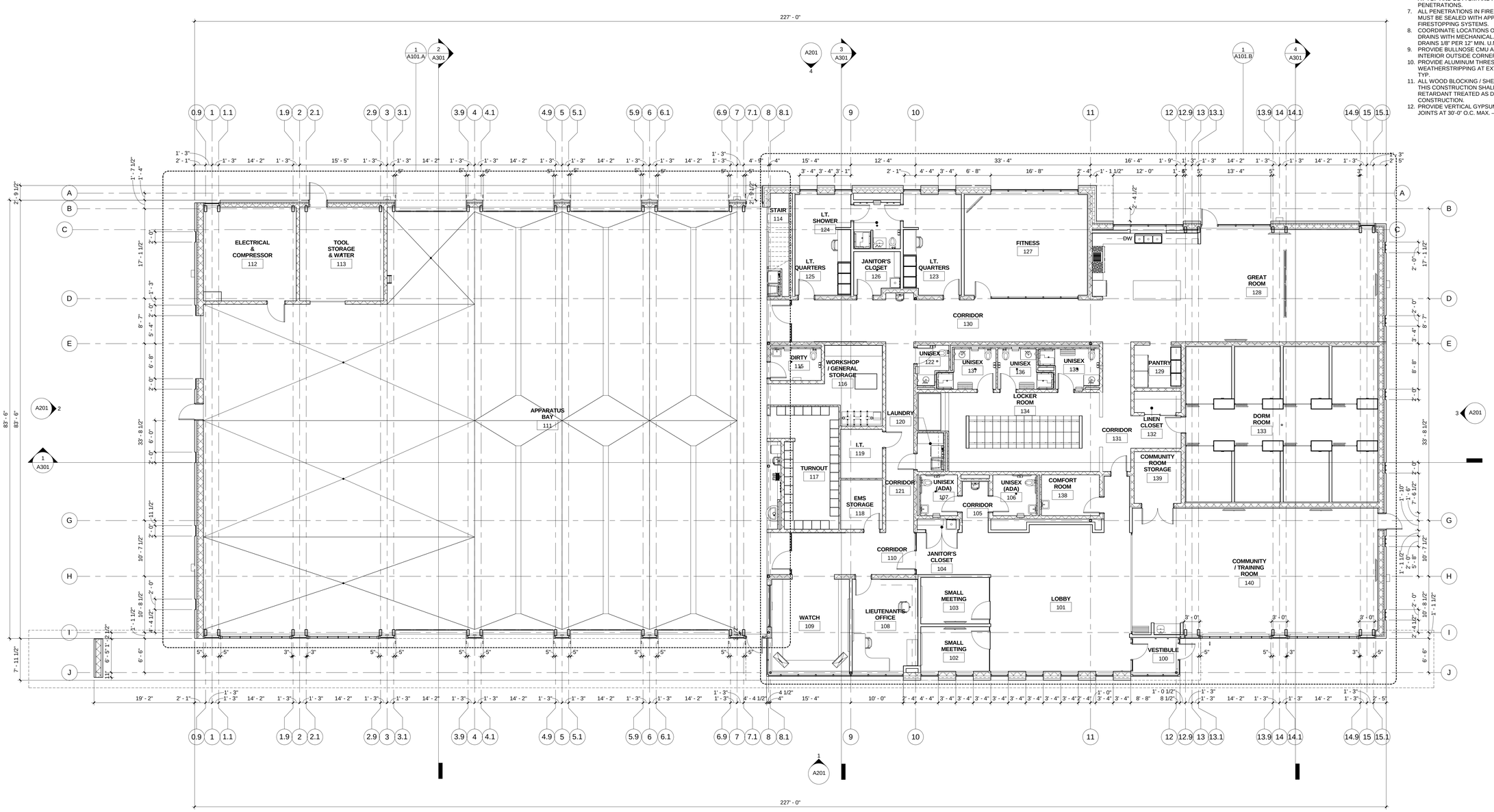

1 LEVEL 1 FLOOR PLAN AREA A
1/8" = 1'-0"

GENERAL NOTES

1. DIMENSIONS ARE MEASURED FACE-OF-FINISH TO FACE OF FINISH OR ROUGH OPENING UNLESS NOTED OTHERWISE – TYPICAL FOR ALL DRAWINGS.
2. IN THE EVENT OF A DISCREPENCY BETWEEN ARCHITECTURAL AND CONSULTANT DRAWINGS, NOTIFY ARCHITECT IMMEDIATELY PRIOR TO COMMENCING WORK – TYPICAL FOR ALL DRAWINGS.
3. REFER TO ENLARGED FLOOR PLANS FOR ADDITIONAL WALL TYPE LOCATIONS, DIMENSIONS AND KEYNOTES.
4. REFER TO WALL TYPES SHEET FOR PARTITION WALL TYPES
5. PROVIDE CONCEALED, FIRE TREATED BLOCKING AT ALL ACCESSORIES AND CASEWORK LOCATIONS. EXTEND BLOCKING A MINIMUM OF 6" BEYOND EACH END AND 6" ABOVE AND BELOW ALL ACCESSORY ITEMS.
6. ALL WALLS WITH SOUND ATTENUATION BLANKETS ARE TO HAVE ACOUSTICAL SEALANT AT TOP AND BOTTOM AND ALL WALL PENETRATIONS.
7. ALL PENETRATIONS IN FIRE RATED WALLS MUST BE SEALED WITH APPROPRIATE FIRESTOPPING SYSTEMS.
8. COORDINATE LOCATIONS OF ALL FLOOR DRAINS WITH MECHANICAL. SLOPE AROUND DRAINS 1/8" PER 12" MIN. U.N.O.
9. PROVIDE BULLNOSE CMU AT ALL EXPOSED INTERIOR OUTSIDE CORNERS.
10. PROVIDE ALUMINUM THRESHOLD AND WEATHERSTRIPPING AT EXTERIOR DOORS – TYP.
11. ALL WOOD BLOCKING / SHEATHING USED IN THIS CONSTRUCTION SHALL BE FIRE-RETARDANT TREATED AS DEFINED BY II-B CONSTRUCTION.
12. PROVIDE VERTICAL GYPSUM BOARD CONTROL JOINTS AT 30'-0" O.C. MAX. – U.N.O.

OPN ARCHITECTS

301 N BROOM STREET #100
MADISON, WI 53703
608-819-0260 PHONE
www.opnarchitects.com
opn@opnarchitects.com

All reports, plans, specifications, computer files, field data, notes and other documents and instruments prepared by OPN Architects, Inc. as instruments of service shall remain the property of OPN Architects, Inc. OPN Architects, Inc. shall retain all common law, statutory and other reserved rights, including the copyright thereto.

© 2017 OPN Architects, Inc.

Owner

City of Madison Fire Department

314 W. Dayton St.
Madison, WI 53703

Project

Madison Fire Station 14

3201 Dairy Drive
Madison, WI 53718

Civil Engineer

Snyder & Associates, Inc

5010 Voges Rd
Madison WI, 53718
P. 608-838-0444

Structural Engineer

IMEG

1800 Deming Way #200
Middleton, WI 53562
P. 608-223-0444

Mechanical Engineer

IMEG

1800 Deming Way #200
Middleton, WI 53562
P. 608-223-0444

Electrical Engineer

IMEG

1800 Deming Way #200
Middleton, WI 53562
P. 608-223-0444

Key Plan

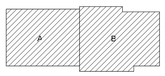

Sheet Issue Date	
BID DOCUMENTS	11/03/17

Revision	Date

BID DOCUMENTS

Drawing

FLOOR PLAN LEVEL 1

City of Madison Contract No. **8027**
OPN Project No. **17207000**

A101

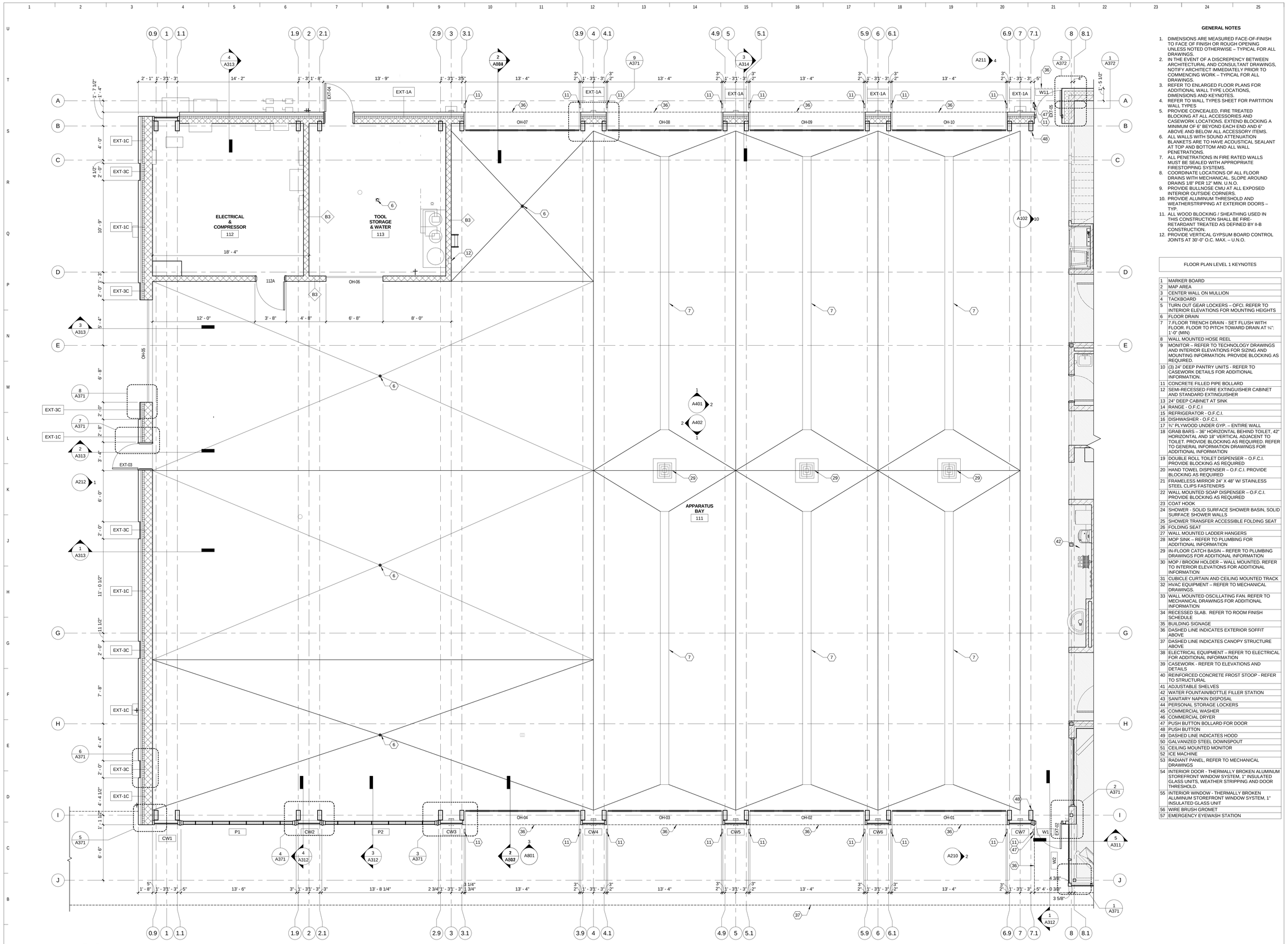

1 LEVEL 1 FLOOR PLAN AREA A
1/4" = 1'-0"

GENERAL NOTES

1. DIMENSIONS ARE MEASURED FACE-OF-FINISH TO FACE OF FINISH OR ROUGH OPENING UNLESS NOTED OTHERWISE – TYPICAL FOR ALL DRAWINGS.
2. IN THE EVENT OF A DISCREPENCY BETWEEN ARCHITECTURAL AND CONSULTANT DRAWINGS, NOTIFY ARCHITECT IMMEDIATELY PRIOR TO COMMENCING WORK – TYPICAL FOR ALL DRAWINGS.
3. REFER TO ENLARGED FLOOR PLANS FOR ADDITIONAL WALL TYPE LOCATIONS, DIMENSIONS AND KEYNOTES.
4. REFER TO WALL TYPES SHEET FOR PARTITION WALL TYPES
5. PROVIDE CONCEALED, FIRE TREATED BLOCKING AT ALL ACCESSORIES AND CASEWORK LOCATIONS. EXTEND BLOCKING A MINIMUM OF 6" BEYOND EACH END AND 6" ABOVE AND BELOW ALL ACCESSORY ITEMS.
6. ALL WALLS WITH SOUND ATTENUATION BLANKETS ARE TO HAVE ACOUSTICAL SEALANT AT TOP AND BOTTOM AND ALL WALL PENETRATIONS.
7. ALL PENETRATIONS IN FIRE RATED WALLS MUST BE SEALED WITH APPROPRIATE FIRESTOPPING SYSTEMS.
8. COORDINATE LOCATIONS OF ALL FLOOR DRAINS WITH MECHANICAL. SLOPE AROUND DRAINS 1/8" PER 12" MIN. U.N.O.
9. PROVIDE BULLNOSE CMU AT ALL EXPOSED INTERIOR OUTSIDE CORNERS.
10. PROVIDE ALUMINUM THRESHOLD AND WEATHERSTRIPPING AT EXTERIOR DOORS – TYP.
11. ALL WOOD BLOCKING / SHEATHING USED IN THIS CONSTRUCTION SHALL BE FIRE-RETARDANT TREATED AS DEFINED BY II-B CONSTRUCTION.
12. PROVIDE VERTICAL GYPSUM BOARD CONTROL JOINTS AT 30'-0" O.C. MAX. – U.N.O.

FLOOR PLAN LEVEL 1 KEYNOTES

1	MARKER BOARD
2	MAP AREA
3	CENTER WALL ON MULLION
4	TACKBOARD
5	TURN OUT GEAR LOCKERS – OFCI. REFER TO INTERIOR ELEVATIONS FOR MOUNTING HEIGHTS
6	FLOOR DRAIN
7	7.FLOOR TRENCH DRAIN - SET FLUSH WITH FLOOR. FLOOR TO PITCH TOWARD DRAIN AT ¼": 1'-0" (MIN)
8	WALL MOUNTED HOSE REEL
9	MONITOR – REFER TO TECHNOLOGY DRAWINGS AND INTERIOR ELEVATIONS FOR SIZING AND MOUNTING INFORMATION. PROVIDE BLOCKING AS REQUIRED.
10	(3) 24" DEEP PANTRY UNITS - REFER TO CASEWORK DETAILS FOR ADDITIONAL INFORMATION.
11	CONCRETE FILLED PIPE BOLLARD
12	SEMI-RECESSED FIRE EXTINGUISHER CABINET AND STANDARD EXTINGUISHER
13	24" DEEP CABINET AT SINK
14	RANGE - O.F.C.I
15	REFRIGERATOR - O.F.C.I.
16	DISHWASHER - O.F.C.I.
17	¾" PLYWOOD UNDER GYP. – ENTIRE WALL
18	GRAB BARS – 36" HORIZONTAL BEHIND TOILET, 42" HORIZONTAL AND 18" VERTICAL ADJACENT TO TOILET. PROVIDE BLOCKING AS REQUIRED. REFER TO GENERAL INFORMATION DRAWINGS FOR ADDITIONAL INFORMATION
19	DOUBLE ROLL TOILET DISPENSER – O.F.C.I. PROVIDE BLOCKING AS REQUIRED
20	HAND TOWEL DISPENSER – O.F.C.I. PROVIDE BLOCKING AS REQUIRED
21	FRAMELESS MIRROR 24" X 48" W/ STAINLESS STEEL CLIPS FASTENERS
22	WALL MOUNTED SOAP DISPENSER – O.F.C.I. PROVIDE BLOCKING AS REQUIRED
23	COAT HOOK
24	SHOWER - SOLID SURFACE SHOWER BASIN, SOLID SURFACE SHOWER WALLS
25	SHOWER TRANSFER ACCESSIBLE FOLDING SEAT
26	FOLDING SEAT
27	WALL MOUNTED LADDER HANGERS
28	MOP SINK – REFER TO PLUMBING FOR ADDITIONAL INFORMATION
29	IN-FLOOR CATCH BASIN – REFER TO PLUMBING DRAWINGS FOR ADDITIONAL INFORMATION
30	MOP / BROOM HOLDER – WALL MOUNTED. REFER TO INTERIOR ELEVATIONS FOR ADDITIONAL INFORMATION
31	CUBICLE CURTAIN AND CEILING MOUNTED TRACK
32	HVAC EQUIPMENT – REFER TO MECHANICAL DRAWINGS.
33	WALL MOUNTED OSCILLATING FAN. REFER TO MECHANICAL DRAWINGS FOR ADDITIONAL INFORMATION
34	RECESSED SLAB. REFER TO ROOM FINISH SCHEDULE
35	BUILDING SIGNAGE
36	DASHED LINE INDICATES EXTERIOR SOFFIT ABOVE
37	DASHED LINE INDICATES CANOPY STRUCTURE ABOVE
38	ELECTRICAL EQUIPMENT – REFER TO ELECTRICAL FOR ADDITIONAL INFORMATION
39	CASEWORK - REFER TO ELEVATIONS AND DETAILS
40	REINFORCED CONCRETE FROST STOOP - REFER TO STRUCTURAL
41	ADJUSTABLE SHELVES
42	WATER FOUNTAIN/BOTTLE FILLER STATION
43	SANITARY NAPKIN DISPOSAL
44	PERSONAL STORAGE LOCKERS
45	COMMERCIAL WASHER
46	COMMERCIAL DRYER
47	PUSH BUTTON BOLLARD FOR DOOR
48	PUSH BUTTON
49	DASHED LINE INDICATES HOOD
50	GALVANIZED STEEL DOWNSPOUT
51	CEILING MOUNTED MONITOR
52	ICE MACHINE
53	RADIANT PANEL, REFER TO MECHANICAL DRAWINGS
54	INTERIOR DOOR - THERMALLY BROKEN ALUMINUM STOREFRONT WINDOW SYSTEM, 1" INSULATED GLASS UNITS, WEATHER STRIPPING AND DOOR THRESHOLD.
55	INTERIOR WINDOW - THERMALLY BROKEN ALUMINUM STOREFRONT WINDOW SYSTEM, 1" INSULATED GLASS UNIT
56	WIRE BRUSH GROMET
57	EMERGENCY EYEWASH STATION

OPN ARCHITECTS
301 N BROOM STREET #100
MADISON, WI 53703
608-819-0260 PHONE
www.opnarchitects.com
opn@opnarchitects.com

All reports, plans, specifications, computer files, field data, notes and other documents and instruments prepared by OPN Architects, Inc. as instruments of service shall remain the property of OPN Architects, Inc. OPN Architects, Inc. shall retain all common law, statutory and other reserved rights, including the copyright thereto.

© 2017 OPN Architects, Inc.

Owner
City of Madison Fire Department
314 W. Dayton St.
Madison, WI 53703

Project
Madison Fire Station 14
3201 Dairy Drive
Madison, WI 53718

Civil Engineer
Snyder & Associates, Inc
5010 Voges Rd
Madison WI, 53718
P. 608-838-0444

Structural Engineer
IMEG
1800 Deming Way #200
Middleton, WI 53562
P. 608-223-0444

Mechanical Engineer
IMEG
1800 Deming Way #200
Middleton, WI 53562
P. 608-223-0444

Electrical Engineer
IMEG
1800 Deming Way #200
Middleton, WI 53562
P. 608-223-0444

Key Plan

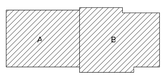

Sheet Issue Date	
BID DOCUMENTS	11/03/17

Revision	Date

BID DOCUMENTS

Drawing
FLOOR PLAN LEVEL 1.A

City of Madison Contract No. **8027**
OPN Project No. **17207000**

A101.A

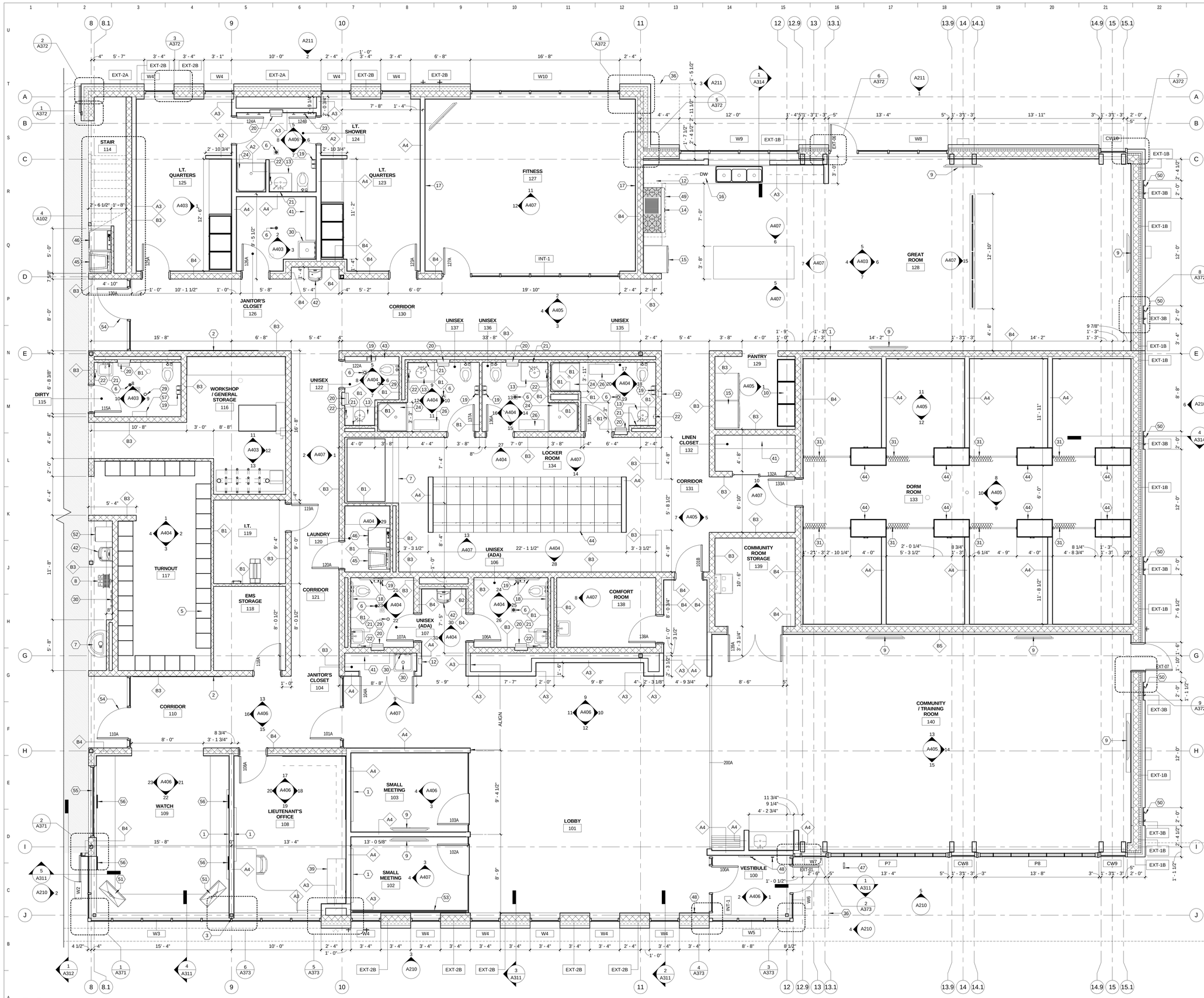

1 LEVEL 1 FLOOR PLAN AREA B
1/4" = 1'-0"

GENERAL NOTES

1. DIMENSIONS ARE MEASURED FACE-OF-FINISH TO FACE OF FINISH OR ROUGH OPENING UNLESS NOTED OTHERWISE – TYPICAL FOR ALL DRAWINGS.
2. IN THE EVENT OF A DISCREPENCY BETWEEN ARCHITECTURAL AND CONSULTANT DRAWINGS, NOTIFY ARCHITECT IMMEDIATELY PRIOR TO COMMENCING WORK – TYPICAL FOR ALL DRAWINGS.
3. REFER TO ENLARGED FLOOR PLANS FOR ADDITIONAL WALL TYPE LOCATIONS, DIMENSIONS AND KEYNOTES.
4. REFER TO WALL TYPES SHEET FOR PARTITION WALL TYPES
5. PROVIDE CONCEALED, FIRE TREATED BLOCKING AT ALL ACCESSORIES AND CASEWORK LOCATIONS. EXTEND BLOCKING A MINIMUM OF 6" BEYOND EACH END AND 6" ABOVE AND BELOW ALL ACCESSORY ITEMS.
6. ALL WALLS WITH SOUND ATTENUATION BLANKETS ARE TO HAVE ACOUSTICAL SEALANT AT TOP AND BOTTOM AND ALL WALL PENETRATIONS.
7. ALL PENETRATIONS IN FIRE RATED WALLS MUST BE SEALED WITH APPROPRIATE FIRESTOPPING SYSTEMS.
8. COORDINATE LOCATIONS OF ALL FLOOR DRAINS WITH MECHANICAL. SLOPE AROUND DRAINS 1/8" PER 12" MIN. U.N.O.
9. PROVIDE BULLNOSE CMU AT ALL EXPOSED INTERIOR OUTSIDE CORNERS.
10. PROVIDE ALUMINUM THRESHOLD AND WEATHERSTRIPPING AT EXTERIOR DOORS – TYP.
11. ALL WOOD BLOCKING / SHEATHING USED IN THIS CONSTRUCTION SHALL BE FIRE-RETARDANT TREATED AS DEFINED BY II-B CONSTRUCTION.
12. PROVIDE VERTICAL GYPSUM BOARD CONTROL JOINTS AT 30'-0" O.C. MAX. – U.N.O.

FLOOR PLAN LEVEL 1 KEYNOTES

1	MARKER BOARD
2	MAP AREA
3	CENTER WALL ON MULLION
4	TACKBOARD
5	TURN OUT GEAR LOCKERS – OFCI. REFER TO INTERIOR ELEVATIONS FOR MOUNTING HEIGHTS
6	FLOOR DRAIN
7	7 FLOOR TRENCH DRAIN - SET FLUSH WITH FLOOR. FLOOR TO PITCH TOWARD DRAIN AT ¼": 1'-0" (MIN)
8	WALL MOUNTED HOSE REEL
9	MONITOR – REFER TO TECHNOLOGY DRAWINGS AND INTERIOR ELEVATIONS FOR SIZING AND MOUNTING INFORMATION. PROVIDE BLOCKING AS REQUIRED.
10	(3) 24" DEEP PANTRY UNITS - REFER TO CASEWORK DETAILS FOR ADDITIONAL INFORMATION.
11	CONCRETE FILLED PIPE BOLLARD
12	SEMI-RECESSED FIRE EXTINGUISHER CABINET AND STANDARD EXTINGUISHER
13	24" DEEP CABINET AT SINK
14	RANGE - O.F.C.I
15	REFRIGERATOR - O.F.C.I.
16	DISHWASHER - O.F.C.I.
17	¼" PLYWOOD UNDER GYP. – ENTIRE WALL
18	GRAB BARS – 36" HORIZONTAL BEHIND TOILET, 42" HORIZONTAL AND 18" VERTICAL ADJACENT TO TOILET. PROVIDE BLOCKING AS REQUIRED. REFER TO GENERAL INFORMATION DRAWINGS FOR ADDITIONAL INFORMATION
19	DOUBLE ROLL TOILET DISPENSER – O.F.C.I. PROVIDE BLOCKING AS REQUIRED
20	HAND TOWEL DISPENSER – O.F.C.I. PROVIDE BLOCKING AS REQUIRED
21	FRAMELESS MIRROR 24" X 48" W/ STAINLESS STEEL CLIPS FASTENERS
22	WALL MOUNTED SOAP DISPENSER – O.F.C.I. PROVIDE BLOCKING AS REQUIRED
23	COAT HOOK
24	SHOWER - SOLID SURFACE SHOWER BASIN, SOLID SURFACE SHOWER WALLS
25	SHOWER TRANSFER ACCESSIBLE FOLDING SEAT
26	FOLDING SEAT
27	WALL MOUNTED LADDER HANGERS
28	MOP SINK – REFER TO PLUMBING FOR ADDITIONAL INFORMATION
29	IN-FLOOR CATCH BASIN – REFER TO PLUMBING DRAWINGS FOR ADDITIONAL INFORMATION
30	MOP / BROOM HOLDER – WALL MOUNTED. REFER TO INTERIOR ELEVATIONS FOR ADDITIONAL INFORMATION
31	CUBICLE CURTAIN AND CEILING MOUNTED TRACK
32	HVAC EQUIPMENT – REFER TO MECHANICAL DRAWINGS.
33	WALL MOUNTED OSCILLATING FAN. REFER TO MECHANICAL DRAWINGS FOR ADDITIONAL INFORMATION
34	RECESSED SLAB. REFER TO ROOM FINISH SCHEDULE
35	BUILDING SIGNAGE
36	DASHED LINE INDICATES EXTERIOR SOFFIT ABOVE
37	DASHED LINE INDICATES CANOPY STRUCTURE ABOVE
38	ELECTRICAL EQUIPMENT – REFER TO ELECTRICAL FOR ADDITIONAL INFORMATION
39	CASEWORK - REFER TO ELEVATIONS AND DETAILS
40	REINFORCED CONCRETE FROST STOOP - REFER TO STRUCTURAL
41	ADJUSTABLE SHELVES
42	WATER FOUNTAIN/BOTTLE FILLER STATION
43	SANITARY NAPKIN DISPOSAL
44	PERSONAL STORAGE LOCKERS
45	COMMERCIAL WASHER
46	COMMERCIAL DRYER
47	PUSH BUTTON BOLLARD FOR DOOR
48	PUSH BUTTON
49	DASHED LINE INDICATES HOOD
50	GALVANIZED STEEL DOWNSPOUT
51	CEILING MOUNTED MONITOR
52	ICE MACHINE
53	RADIANT PANEL, REFER TO MECHANICAL DRAWINGS
54	INTERIOR DOOR - THERMALLY BROKEN ALUMINUM STOREFRONT WINDOW SYSTEM, 1" INSULATED GLASS UNITS, WEATHER STRIPPING AND DOOR THRESHOLD.
55	INTERIOR WINDOW - THERMALLY BROKEN ALUMINUM STOREFRONT WINDOW SYSTEM, 1" INSULATED GLASS UNIT
56	WIRE BRUSH GROMET
57	EMERGENCY EYEWASH STATION

OPN ARCHITECTS

301 N BROOM STREET #100
MADISON, WI 53703
608-819-0260 PHONE
www.opnarchitects.com
opn@opnarchitects.com

All reports, plans, specifications, computer files, field data, notes and other documents and instruments prepared by OPN Architects, Inc. as instruments of service shall remain the property of OPN Architects, Inc. OPN Architects, Inc. shall retain all common law, statutory and other reserved rights, including the copyright thereto.

© 2017 OPN Architects, Inc.

Owner
City of Madison Fire Department
314 W. Dayton St.
Madison, WI 53703

Project
Madison Fire Station 14
3201 Dairy Drive
Madison, WI 53718

Civil Engineer
Snyder & Associates, Inc
5010 Voges Rd
Madison WI, 53718
P. 608-838-0444

Structural Engineer
IMEG
1800 Deming Way #200
Middleton, WI 53562
P. 608-223-0444

Mechanical Engineer
IMEG
1800 Deming Way #200
Middleton, WI 53562
P. 608-223-0444

Electrical Engineer
IMEG
1800 Deming Way #200
Middleton, WI 53562
P. 608-223-0444

Key Plan

Sheet Issue Date	
BID DOCUMENTS	11/03/17

Revision	Date

BID DOCUMENTS

Drawing
FLOOR PLAN LEVEL 1.B

City of Madison Contract No. **8027**
OPN Project No. **17207000**

A101.B

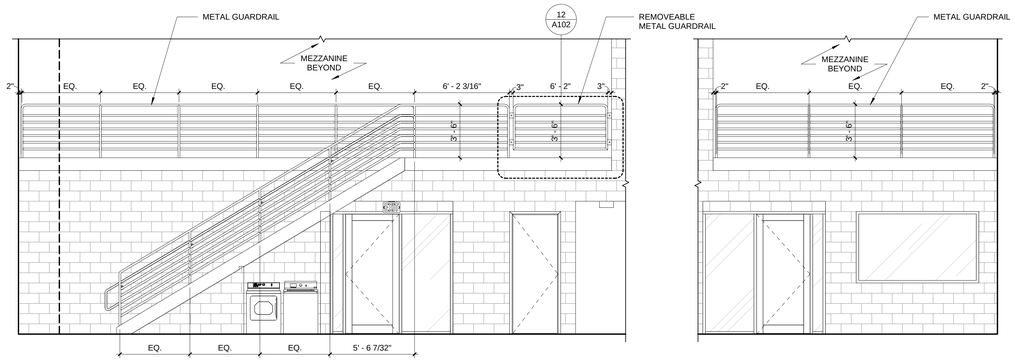

10 STAIR ELEVATION - EAST
1/4" = 1'-0"

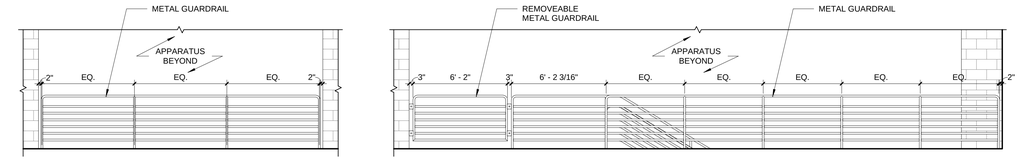

2 MEZZANINE - WEST
1/4" = 1'-0"

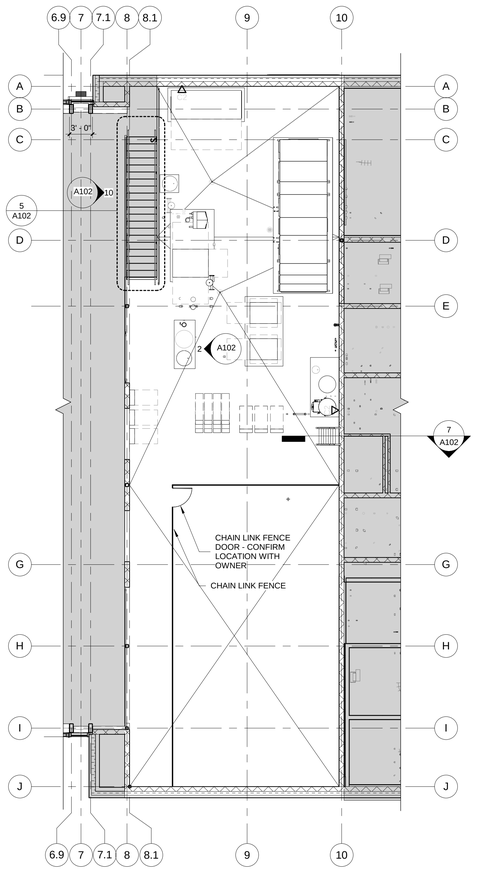

3 MEZZANINE PLAN
1/8" = 1'-0"

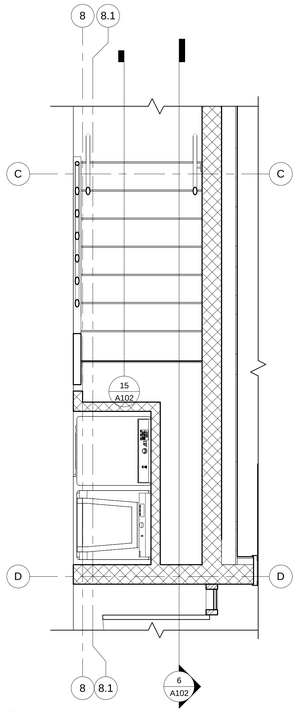

4 Detail 22
1/2" = 1'-0"

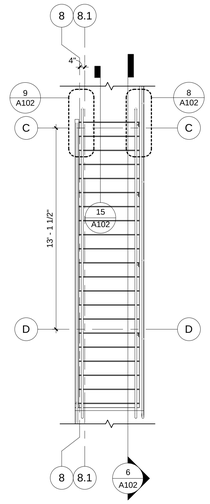

5 MEZZANINE STAIR - PLAN
1/4" = 1'-0"

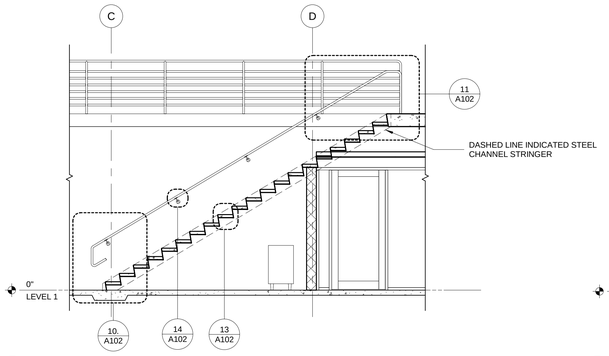

6 MEZZANINE STAIR - SECTION
1/4" = 1'-0"

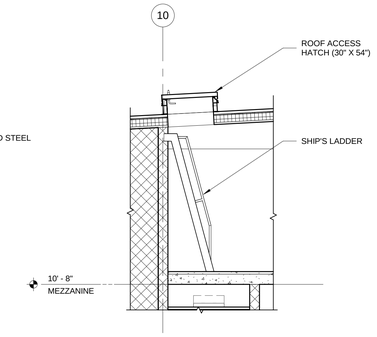

7 SHIP LADDER - SECTION
1/4" = 1'-0"

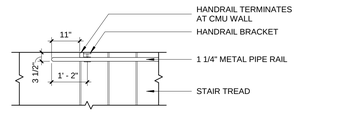

8 HANDRAIL EXTENSION PLAN DETAIL - BOTTOM LANDING (EAST)

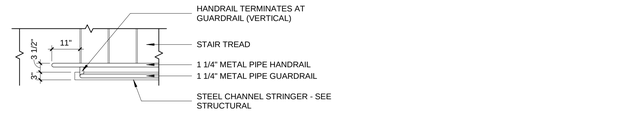

9 HANDRAIL EXTENSION PLAN DETAIL - BOTTOM LANDING (WEST)
1/2" = 1'-0"

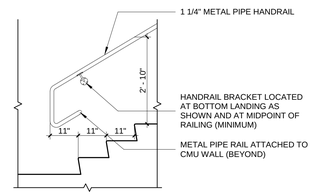

10 HANDRAIL EXTENSION - BOTTOM LANDING
1/2" = 1'-0"

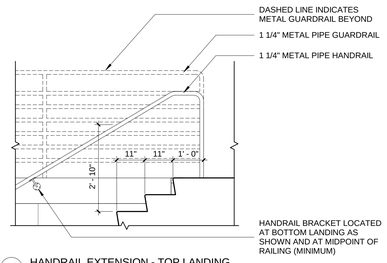

11 HANDRAIL EXTENSION - TOP LANDING
1/2" = 1'-0"

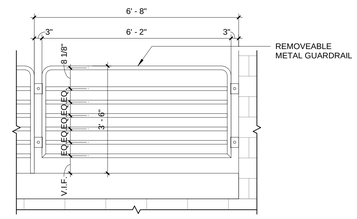

12 REMOVEABLE METAL GUARDRAIL
1/2" = 1'-0"

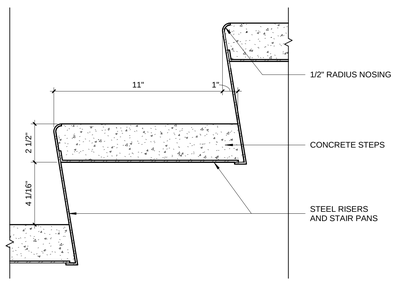

13 METAL PAN TREAN AND RISER
3" = 1'-0"

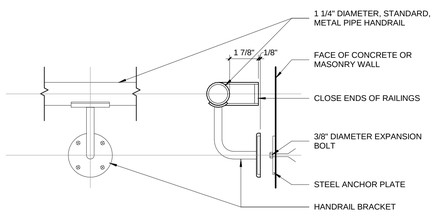

14 HANDRAIL WALL BRACKET
3" = 1'-0"

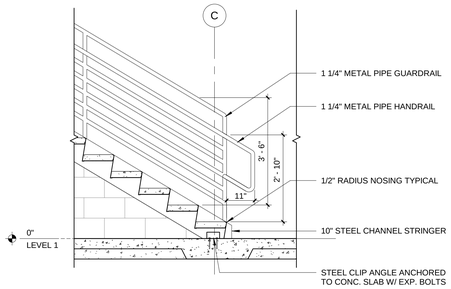

15 STAIR BOTTOM RAILING
1/2" = 1'-0"

OPN ARCHITECTS
301 N BROOM STREET #100
MADISON, WI 53703
608-819-0260 PHONE
www.opnarchitects.com
opn@opnarchitects.com

All reports, plans, specifications, computer files, field data, notes and other documents and instruments prepared by OPN Architects, Inc. as instruments of service shall remain the property of OPN Architects, Inc. OPN Architects, Inc. shall retain all common law, statutory and other reserved rights, including the copyright thereto.

© 2017 OPN Architects, Inc.

Owner
City of Madison Fire Department
314 W. Dayton St.
Madison, WI 53703

Project
Madison Fire Station 14
3201 Dairy Drive
Madison, WI 53718

Civil Engineer
Snyder & Associates, Inc
5010 Voges Rd
Madison WI, 53718
P. 608-838-0444

Structural Engineer
IMEG
1800 Deming Way #200
Middleton, WI 53562
P. 608-223-0444

Mechanical Engineer
IMEG
1800 Deming Way #200
Middleton, WI 53562
P. 608-223-0444

Electrical Engineer
IMEG
1800 Deming Way #200
Middleton, WI 53562
P. 608-223-0444

Key Plan

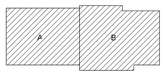

Sheet Issue Date	
BID DOCUMENTS	11/03/17

Revision	Date

BID DOCUMENTS

Drawing
MEZZANINE PLAN

City of Madison Contract No. **8027**
OPN Project No. **17207000**

A102

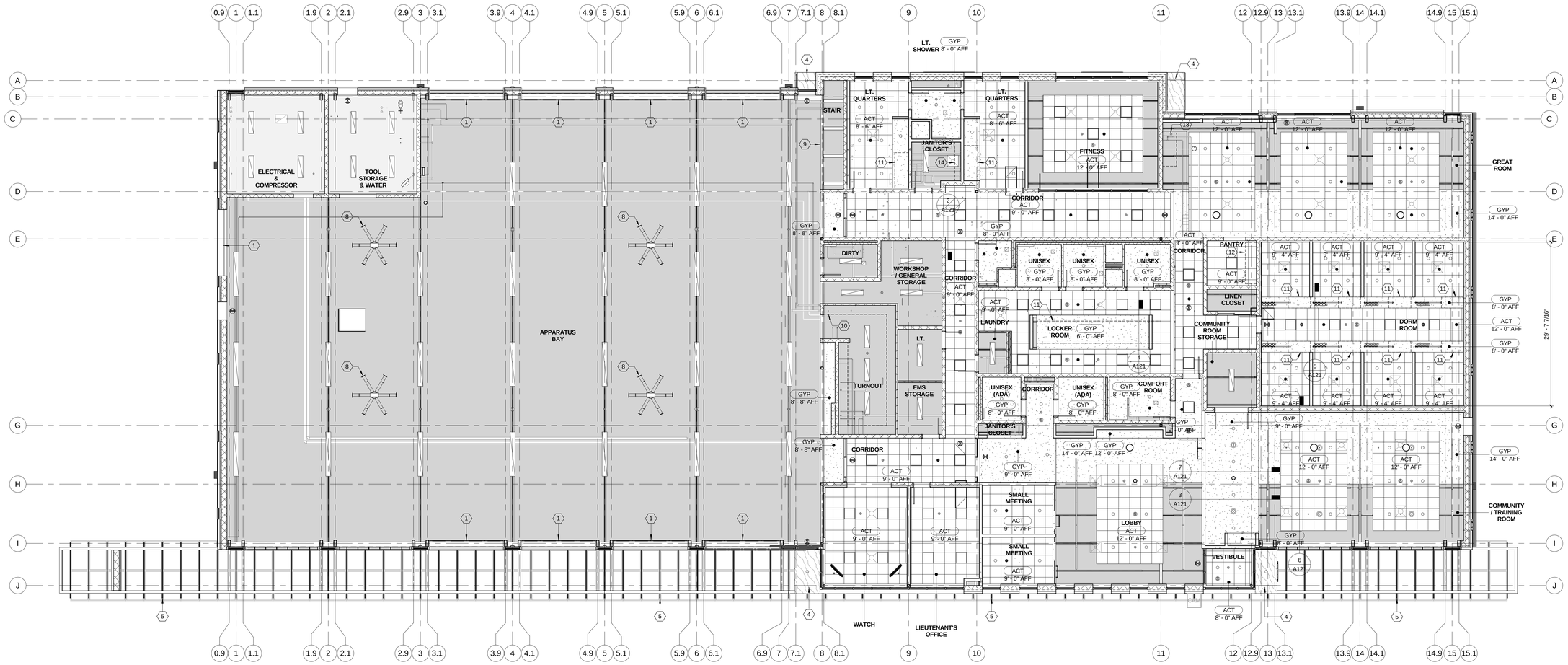

1 LEVEL 1 RCP
1/8" = 1'-0"

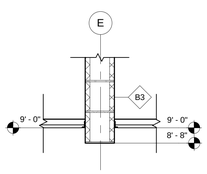

2 RCP SECTION DETAIL
3/4" = 1'-0"

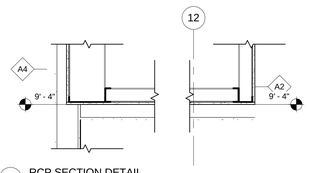

3 RCP SECTION DETAIL
3/4" = 1'-0"

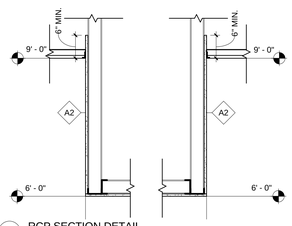

4 RCP SECTION DETAIL
3/4" = 1'-0"

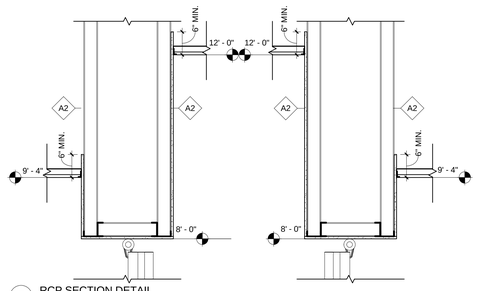

5 RCP SECTION DETAIL

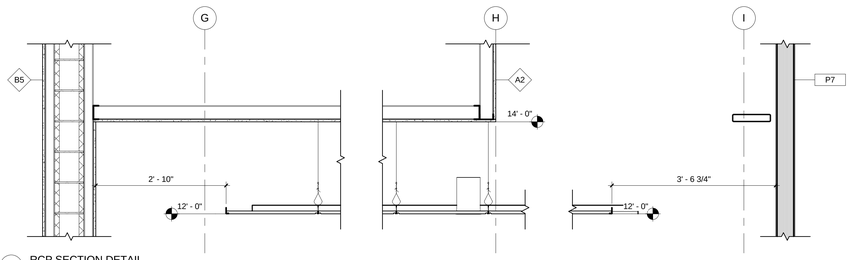

6 RCP SECTION DETAIL
3/4" = 1'-0"

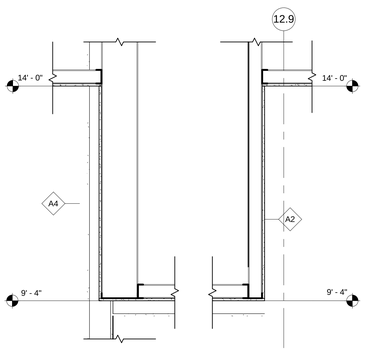

7 RCP SECTION DETAIL
3/4" = 1'-0"

FAN
METALUX SUSPENDED COOPER INDUSTRIAL LED LINEAR BAY - 8'-0"
METALUX SUSPENDED COOPER INDUSTRIAL LED LINEAR BAY - 4'-0"
2' X 2' TROFFER
RECESSED DOWNLIGHT
LIGHT 2 3/4" X 4'-0"
VANITY LIGHT - 3'-4"
VANITY LIGHT - 3'-0"
VANITY LIGHT - 2'-6"
VANITY LIGHT - 2'-0"
PAGING SPEAKER
OCCUPANCY SENSOR
FIRE STROBE
EXIT SIGN
SECURITY CAMERA
AV SPEAKER
MICROPHONE
SMOKE DETECTOR
INFORMATION OUTLETS
HEAT DETECTOR
CEILING MOUNTED TELEVISION

REFLECTED CEILING PLAN SYMBOLS/LEGEND

REFLECTED CEILING PLAN...	
1	OVERHEAD DOOR AND ACTUATOR
4	EXTERIOR SOFFIT ABOVE
5	CANOPY STRUCTURE ABOVE
8	DESTRATIFICATION FAN – REFER TO MECHANICAL DRAWINGS FOR ADDITIONAL INFORMATION
9	DASHED LINE INDICATES STAIR
10	DASHED LINE INDICATES TURNOUT GEAR LOCKERS
11	DASHED LINE INDICATES PERSONAL STORAGE LOCKERS
12	DASHED LINE INDICATES DEEP PANTRY UNITS
13	DASHED LINE INDICATES HOOD
14	DASHED LINE INDICATES UPPER CASEWORK

GENERAL NOTES

1. PAINT ALL EXPOSED STRUCTURE, DECK, DUCTWORK, CONDUIT, SPRINKLER PIPING, ETC. IN AREAS NOTED TO BE "OPEN TO STRUCTURE" – U.N.O. PAINTING OF EXPOSED STRUCTURE TO BE DONE AFTER ALL UTILITIES INSTALLED. REFER TO FINISH SCHEDULE.
2. CEILING HEIGHTS ARE LISTED NEXT TO APPROPRIATE KEYNOTE. HEIGHT IS GIVEN ABOVE FINISHED FLOOR U.N.O.
3. PERIMETER CEILING TILES SHALL NOT BE LESS THAN 4" – TYP.
4. LOCATE ALL SPRINKLER HEADS, SMOKE DETECTORS, AUDIO SPEAKER AND CEILING MOUNTED EQUIPMENT IN THE CENTER OF CEILING TILE – TYP.
5. CENTER CEILING GRID IN ROOMS AS SHOWN U.N.O.
6. LIGHT FIXTURES IN APPARATUS BAY TO BE MOUNTED TO BOTTOM OF STRUCTURAL JOIST – TYP.
7. ALL MECHANICAL DIFFUSERS SHALL BE PAINTED BY MANUFACTURER TO MATCH ADJACENT SOFFIT/ACP – U.N.O.
8. REFER TO ARCHITECTURAL DRAWINGS FOR ALL MECHANICAL AND ELECTRICAL DEVICE LOCATIONS AND MOUNTING HEIGHTS. IF NOT CLEARLY SPECIFIED, CONTACT ARCHITECT FOR FURTHER CLARIFICATION. MECHANICAL AND ELECTRICAL DRAWINGS ARE FOR FIXTURE TYPE REFERENCE ONLY.
9. CAULK JOINT BETWEEN GYPSUM WALL BOARD ASSEMBLIES AND FACE OF CMU AT ALL WALL AND SOFFIT CONDITIONS. CAULKING TO BE CONTINUOUS VERTICALLY AND EXTEND ABOVE LAY-IN CEILING A MINIMUM OF 18", CAULK PRIOR TO PAINTING.

OPN ARCHITECTS
301 N BROOM STREET #100
MADISON, WI 53703
608-819-0260 PHONE
www.opnarchitects.com
opn@opnarchitects.com

All reports, plans, specifications, computer files, field data, notes and other documents and instruments prepared by OPN Architects, Inc. as instruments of service shall remain the property of OPN Architects, Inc. OPN Architects, Inc. shall retain all common law, statutory and other reserved rights, including the copyright thereto.

© 2017 OPN Architects, Inc.

Owner
City of Madison Fire Department
314 W. Dayton St.
Madison, WI 53703

Project
Madison Fire Station 14
3201 Dairy Drive
Madison, WI 53718

Civil Engineer
Snyder & Associates, Inc
5010 Voges Rd
Madison WI, 53718
P. 608-838-0444

Structural Engineer
IMEG
1800 Deming Way #200
Middleton, WI 53562
P. 608-223-0444

Mechanical Engineer
IMEG
1800 Deming Way #200
Middleton, WI 53562
P. 608-223-0444

Electrical Engineer
IMEG
1800 Deming Way #200
Middleton, WI 53562
P. 608-223-0444

Key Plan

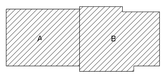

Sheet Issue Date
BID DOCUMENTS 11/03/17

Revision Date

BID DOCUMENTS

Drawing
REFLECTED CEILING PLAN

City of Madison Contract No. **8027**
OPN Project No. **17207000**

A121

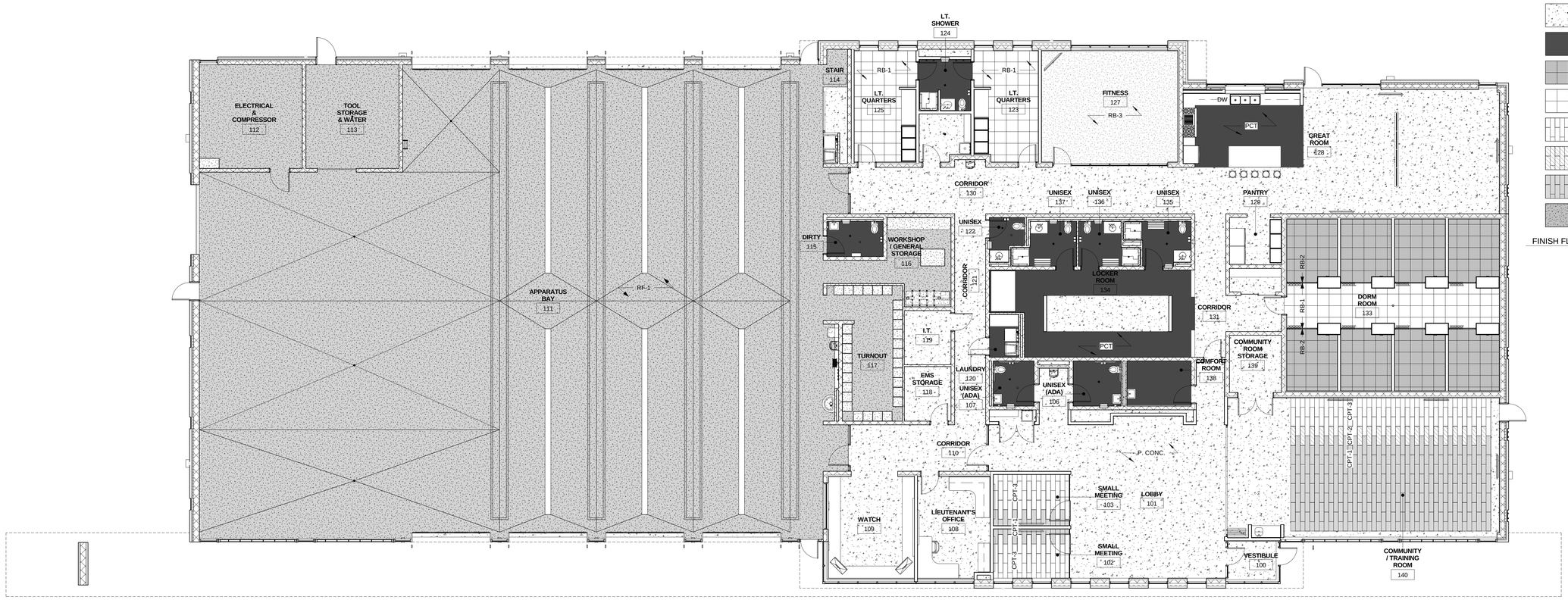

1 FINISH PLAN LEVEL 1
1/8" = 1'-0"

GENERAL NOTES

1. REFER TO INTERIOR ELEVATIONS AND ROOM FINISH SCHEDULE FOR ADDITIONAL WALL AND FLOOR FINISH INFORMATION, PATTERNS AND REMARKS.
2. GRILLES FIXTURE TRIM AND MISCELLANEOUS METALS TO BE PAINTED BY MANUFACTURER TO MATCH ADJACENT WALL OR CEILING SURFACES – U.N.O.
3. PROVIDE FLOORING TRANSITION STRIPS AT FLOOR MATERIAL CHANGES. REFER TO FINISH SCHEDULE SHEET FOR ADDITIONAL INFORMATION. FEATHER FLOORING UP AT LOCATIONS WHERE FLOORING THICKNESS TRANSITIONS REQUIRED.
4. ALL FLOOR MATERIAL CHANGES SHALL OCCUR AT CENTER OF DOOR - U.N.O.
5. PAINT ALL EXPOSED STRUCTURE, DECK, DUCTWORK, CONDUIT, SPRINKLER PIPING, ETC. IN AREAS NOTED TO BE "OPEN TO STRUCTURE" – U.N.O. PAINTING OF EXPOSED STRUCTURE TO BE DONE AFTER ALL UTILITIES INSTALLED. REFER TO FINISH SCHEDULE.
6. RESILIENT BASE (RB) TO BE INSTALLED IN FRONT OF AND AROUND ALL CASEWORK – U.N.O.
7. PROVIDE WINDOW (WT) AT WINDOWS AS INDICATED ON FINISH PLAN. REFER TO SPECIFICATIONS FOR ADDITIONAL INFORMATION. CONTRACTOR TO FIELD VERIFY WINDOW OPENINGS SIZES.
8. VERIFY ALL FINAL TILE JOINT LOCATIONS AND TRANSITIONS WITH ARCHITECT PRIOR TO INSTALLATION.
9. HANDRAILS AND VERTICALS UNDERNEATH OF STAIRS TO BE PAINTED.
10. PROVIDE ALUMINUM THRESHOLD AND WEATHERSTRIPPING AT EXTERIOR DOORS – TYP.

EXPOSED CONCRETE
PORCELAIN TILE
RUBBER FLOORING (RB-2)
RUBBER FLOORING (RB-1)
CARPET (CPT-3)
CARPET (CPT-2)
CARPET (CPT-1)
RESINOUS FLOORING

FINISH FLOOR PLAN SYMBOLS/LEGEND

OPN ARCHITECTS
301 N BROOM STREET #100
MADISON, WI 53703
608-819-0260 PHONE
www.opnarchitects.com
opn@opnarchitects.com

All reports, plans, specifications, computer files, field data, notes and other documents and instruments prepared by OPN Architects, Inc. as instruments of service shall remain the property of OPN Architects, Inc. OPN Architects, Inc. shall retain all common law, statutory and other reserved rights, including the copyright thereto.

© 2017 OPN Architects, Inc.

Owner
City of Madison Fire Department
314 W. Dayton St.
Madison, WI 53703

Project
Madison Fire Station 14
3201 Dairy Drive
Madison, WI 53718

Civil Engineer
Snyder & Associates, Inc
5010 Voges Rd
Madison WI, 53718
P. 608-838-0444

Structural Engineer
IMEG
1800 Deming Way #200
Middleton, WI 53562
P. 608-223-0444

Mechanical Engineer
IMEG
1800 Deming Way #200
Middleton, WI 53562
P. 608-223-0444

Electrical Engineer
IMEG
1800 Deming Way #200
Middleton, WI 53562
P. 608-223-0444

Key Plan

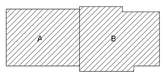

Sheet Issue Date
BID DOCUMENTS 11/03/17

Revision Date

BID DOCUMENTS

Drawing
FINISH PLAN

City of Madison Contract No. **8027**
OPN Project No. **17207000**

A131

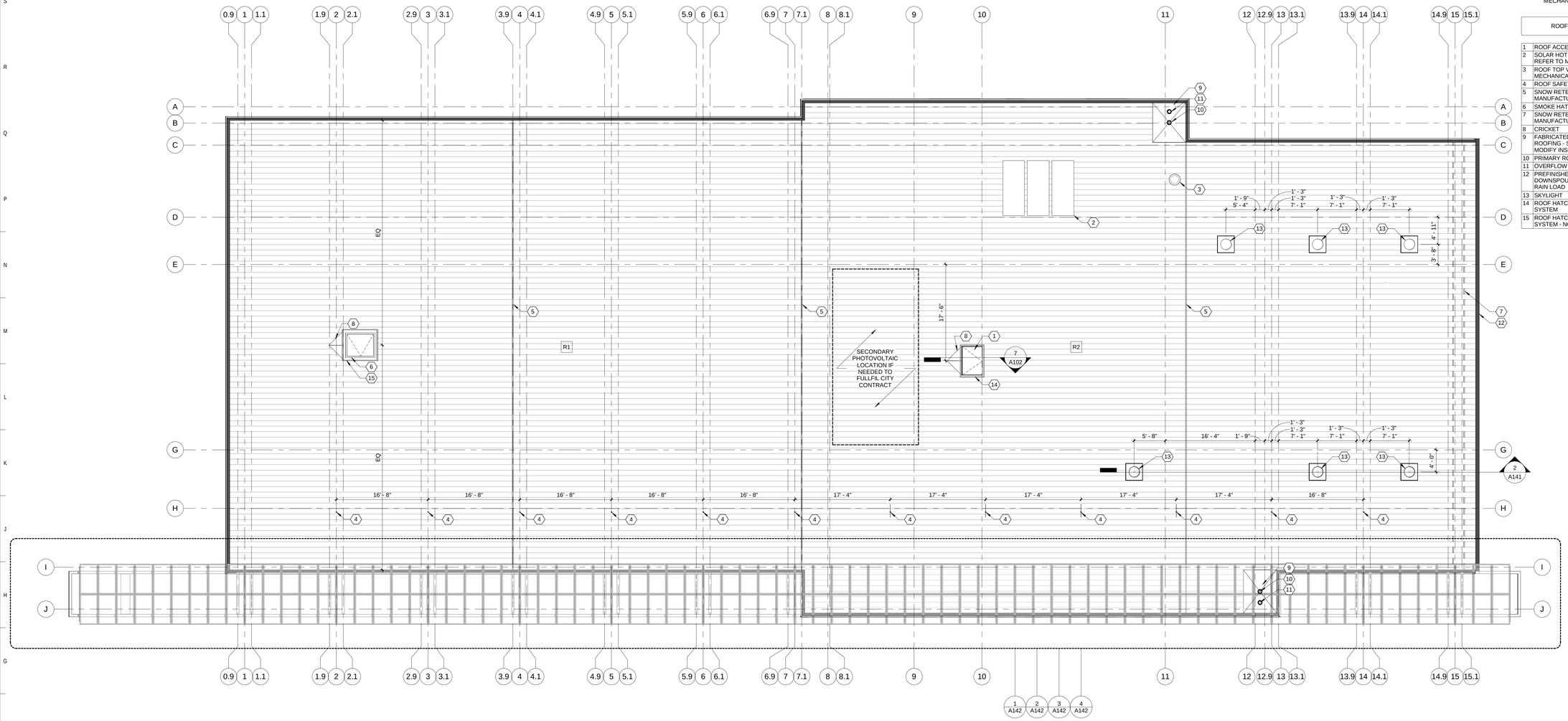

1 ROOF LEVEL FLOOR PLAN
1/8" = 1'-0"

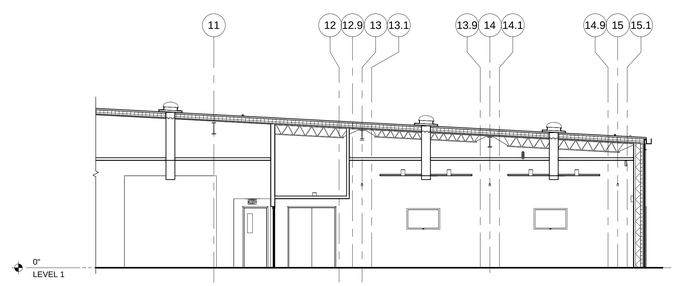

2 SKYLIGHT DIAGRAM
1/8" = 1'-0"

GENERAL NOTES

1. NOT ALL ROOF PENETRATIONS ARE SHOWN. VERIFY LOCAITONS OF ALL ROOF PENETRATIONS. PROVIDE BOOTS, FLASHING AND OTHER ACCESSORIES REQUIRED TO PROVIDE A COMPLETE, WATERTIGHT WARRANTIED SYSTEM.
2. PROTECT SECTIONS OF THE ROOF THAT HAVE ALREADY BEEN INSTALLED FROM DAMAGE. DO NOT USE THE ROOF AS A STAGING AREA UNLESS FACTORY, MUTUALLY APPROVED PROTECTION MEASURES ARE USED TO PROTECT THE ROOF.
3. COORDINATE LOCATION OF MECHANICAL EQUIPMENT WITH MECHANICAL DRAWINGS.

ROOF PLAN KEYNOTES

1	ROOF ACCESS HATCH
2	SOLAR HOT WATER HEATER MODULE - REFER TO MECHANICAL
3	ROOF TOP VENTILATOR - REFER TO MECHANICAL
4	ROOF SAFETY EQUIPMENT TIE-OFF
5	SNOW RETENTION BARS PER MANUFACTURER RECOMMENDATIONS
6	SMOKE HATCH
7	SNOW RETENTION BARS PER MANUFACTURER RECOMMENDATIONS
8	CRICKET
9	FABRICATED GALVANIZED STEEL ROOFING - SLOPES TO ROOF DRAIN - MODIFY INSULATION AS REQUIRED
10	PRIMARY ROOF DRAIN
11	OVERFLOW ROOF DRAIN
12	PREFINISHED ALUMINUM GUTTER AND DOWNSPOUTS SIZED TO ACCOMIDATE RAIN LOAD
13	SKYLIGHT
14	ROOF HATCH SAFETY RAILING SYSTEM
15	ROOF HATCH SAFETY RAILING SYSTEM - NO ACCESS

OPN ARCHITECTS

301 N BROOM STREET #100
MADISON, WI 53703
608-819-0260 PHONE
www.opnarchitects.com
opn@opnarchitects.com

All reports, plans, specifications, computer files, field data, notes and other documents and instruments prepared by OPN Architects, Inc. as instruments of service shall remain the property of OPN Architects, Inc. OPN Architects, Inc. shall retain all common law, statutory and other reserved rights, including the copyright thereto.

© 2017 OPN Architects, Inc.

Owner
City of Madison Fire Department
314 W. Dayton St.
Madison, WI 53703

Project
Madison Fire Station 14
3201 Dairy Drive
Madison, WI 53718

Civil Engineer
Snyder & Associates, Inc
5010 Voges Rd
Madison WI, 53718
P. 608-838-0444

Structural Engineer
IMEG
1800 Deming Way #200
Middleton, WI 53562
P. 608-223-0444

Mechanical Engineer
IMEG
1800 Deming Way #200
Middleton, WI 53562
P. 608-223-0444

Electrical Engineer
IMEG
1800 Deming Way #200
Middleton, WI 53562
P. 608-223-0444

Key Plan

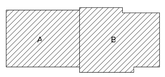

Sheet Issue Date
BID DOCUMENTS 11/03/17

Revision Date

BID DOCUMENTS

Drawing
ROOF PLAN

City of Madison Contract No. **8027**
OPN Project No. **17207000**

A141

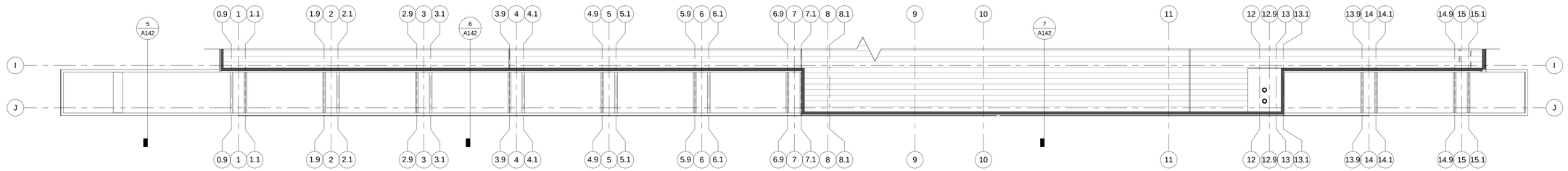

1 PHOTOVOLTAIC PLAN - STRUCTURAL LAYER
1/8" = 1'-0"

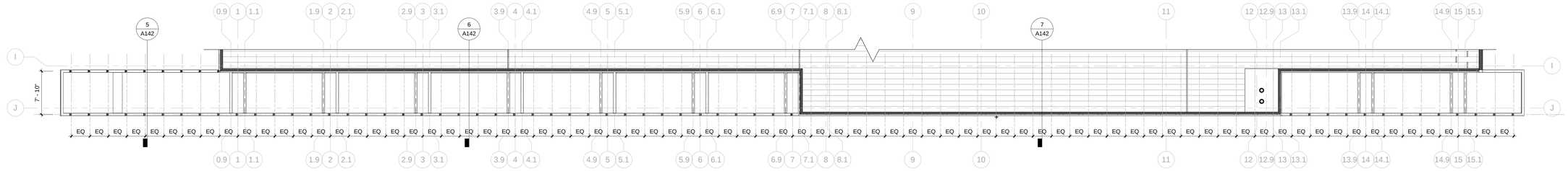

2 PHOTOVOLTAIC PLAN - CLIPS LAYER
1/8" = 1'-0"

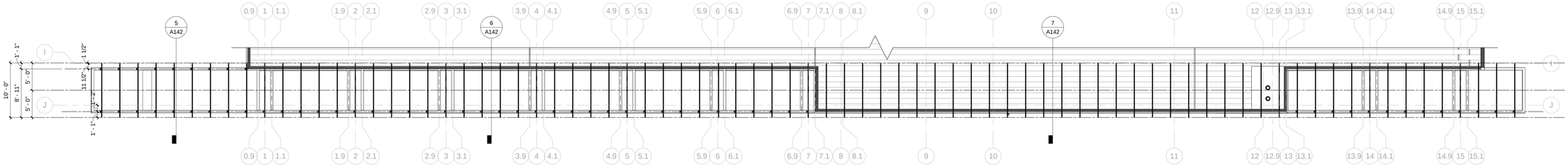

3 PHOTOVOLTAIC PLAN - RAIL LAYER
1/8" = 1'-0"

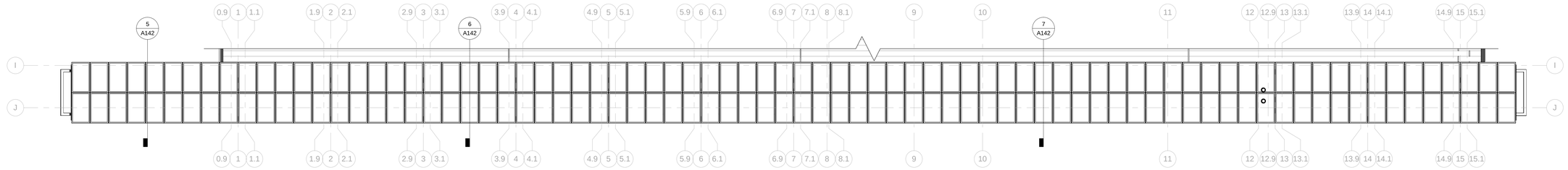

4 PHOTOVOLTAIC PLAN - MODULE LAYER
1/8" = 1'-0"

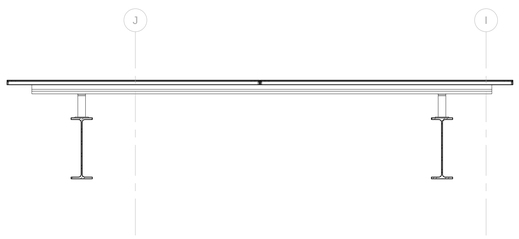

5 PV SECTION DETAIL
3/4" = 1'-0"

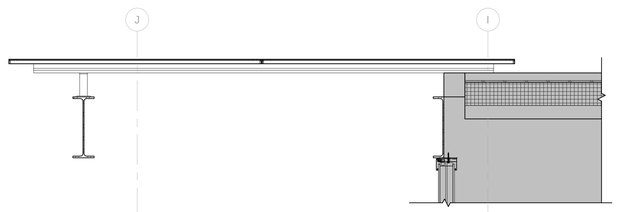

6 PV SECTION DETAIL 2
3/4" = 1'-0"

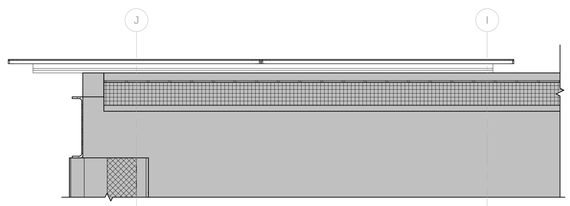

7 PV SECTION DETAIL 3
3/4" = 1'-0"

OPN ARCHITECTS

301 N BROOM STREET #100
MADISON, WI 53703
608-819-0260 PHONE
www.opnarchitects.com
opn@opnarchitects.com

All reports, plans, specifications, computer files, field data, notes and other documents and instruments prepared by OPN Architects, Inc. as instruments of service shall remain the property of OPN Architects, Inc. OPN Architects, Inc. shall retain all common law, statutory and other reserved rights, including the copyright thereto.

© 2017 OPN Architects, Inc.

Owner

City of Madison Fire Department

314 W. Dayton St.
Madison, WI 53703

Project

Madison Fire Station 14

3201 Dairy Drive
Madison, WI 53718

Civil Engineer

Snyder & Associates, Inc

5010 Voges Rd
Madison WI, 53718
P. 608-838-0444

Structural Engineer

IMEG

1800 Deming Way #200
Middleton, WI 53562
P. 608-223-0444

Mechanical Engineer

IMEG

1800 Deming Way #200
Middleton, WI 53562
P. 608-223-0444

Electrical Engineer

IMEG

1800 Deming Way #200
Middleton, WI 53562
P. 608-223-0444

Key Plan

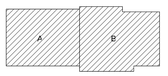

Sheet Issue Date

BID DOCUMENTS 11/03/17

Revison Date

BID DOCUMENTS

Drawing

ROOF PLAN - PHOTOVOLTAIC DESIGN

City of Madison Contract No. **8027**
OPN Project No. **17207000**

A142

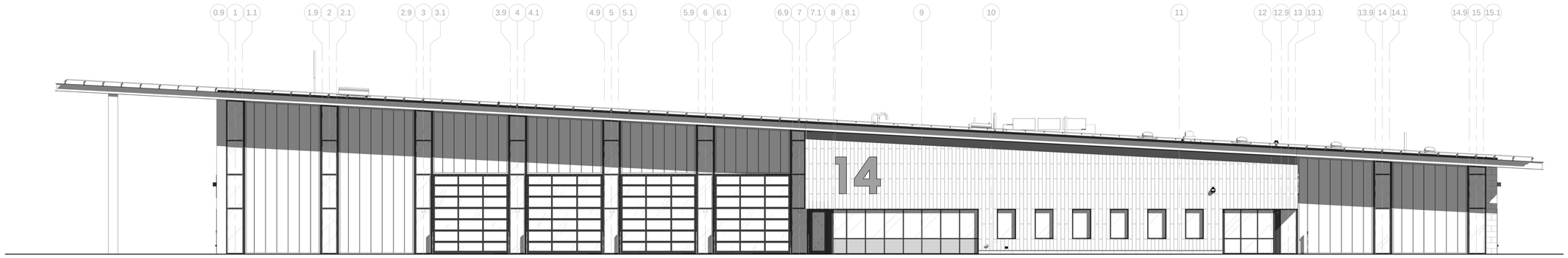

1 BUILDING ELEVATION - WEST
1/8" = 1'-0"

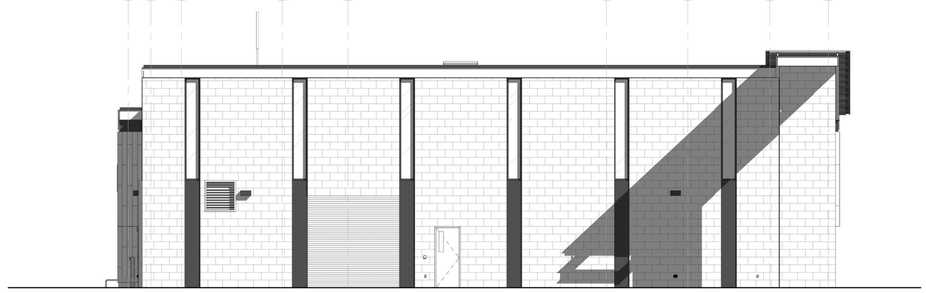

2 BUILDING ELEVATION - NORTH
1/8" = 1'-0"

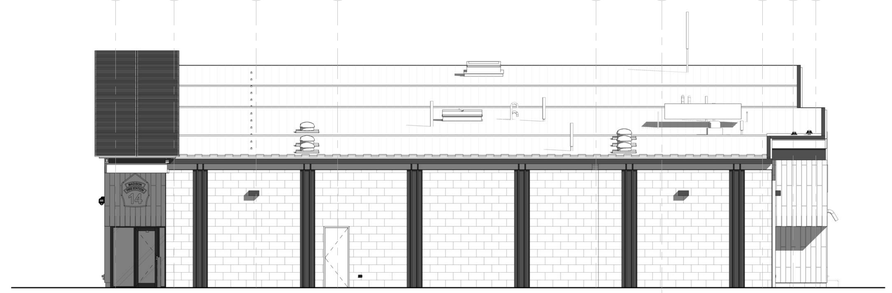

3 BUILDING ELEVATION - SOUTH
1/8" = 1'-0"

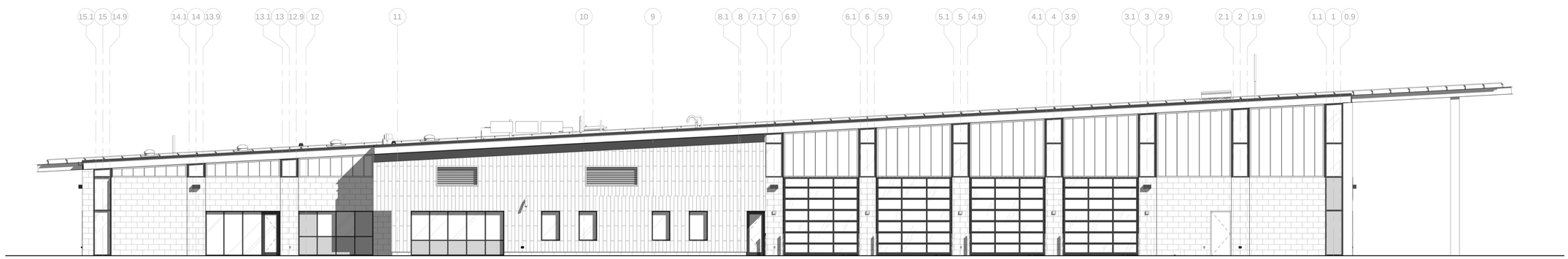

4 BUILDING ELEVATION - EAST
1/8" = 1'-0"

OPN ARCHITECTS

301 N BROOM STREET #100
MADISON, WI 53703
608-819-0260 PHONE
www.opnarchitects.com
opn@opnarchitects.com

All reports, plans, specifications, computer files, field data, notes and other documents and instruments prepared by OPN Architects, Inc. as instruments of service shall remain the property of OPN Architects, Inc. OPN Architects, Inc. shall retain all common law, statutory and other reserved rights, including the copyright thereto.

© 2017 OPN Architects, Inc.

Owner
City of Madison Fire Department
314 W. Dayton St.
Madison, WI 53703

Project
Madison Fire Station 14
3201 Dairy Drive
Madison, WI 53718

Civil Engineer
Snyder & Associates, Inc
5010 Voges Rd
Madison WI, 53718
P. 608-838-0444

Structural Engineer
IMEG
1800 Deming Way #200
Middleton, WI 53562
P. 608-223-0444

Mechanical Engineer
IMEG
1800 Deming Way #200
Middleton, WI 53562
P. 608-223-0444

Electrical Engineer
IMEG
1800 Deming Way #200
Middleton, WI 53562
P. 608-223-0444

Key Plan

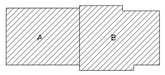

Sheet Issue Date
BID DOCUMENTS 11/03/17

Revision Date

BID DOCUMENTS

Drawing
EXTERIOR ELEVATIONS

City of Madison Contract No. **8027**
OPN Project No. **17207000**

A201

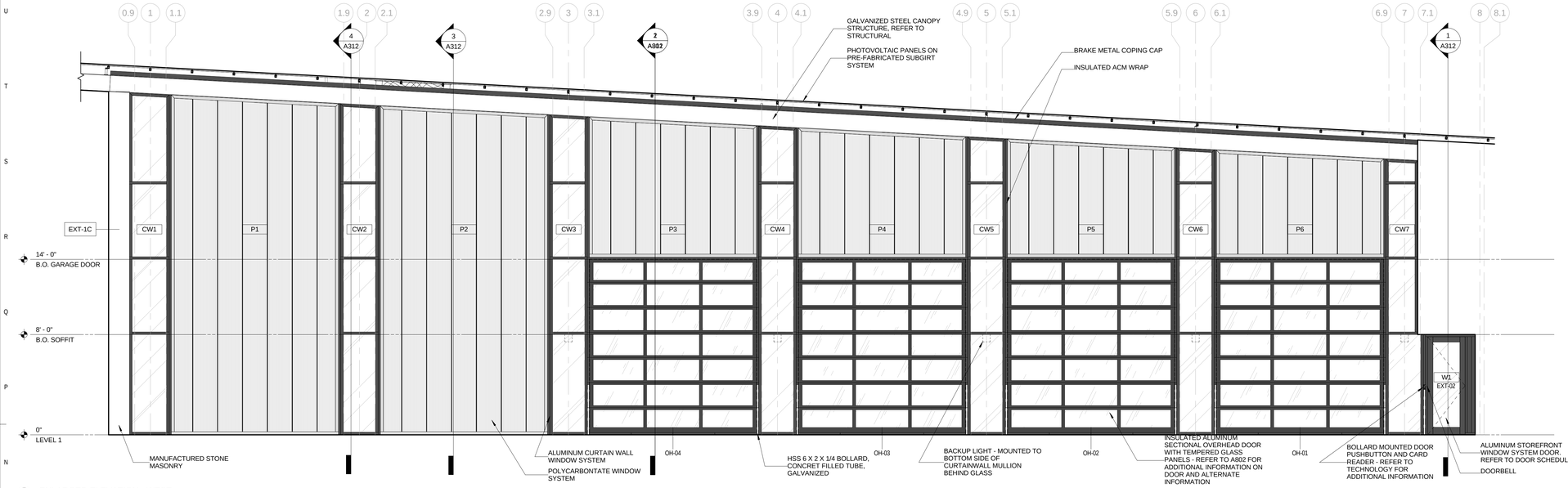

1 ENLARGED ELEVATION - WEST
1/4" = 1'-0"

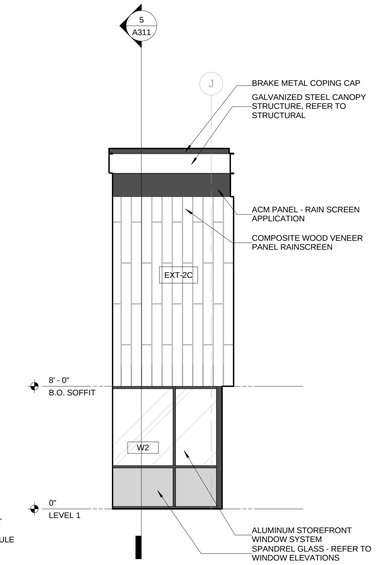

2 ENLARGED ELEVATION - NORTH
1/4" = 1'-0"

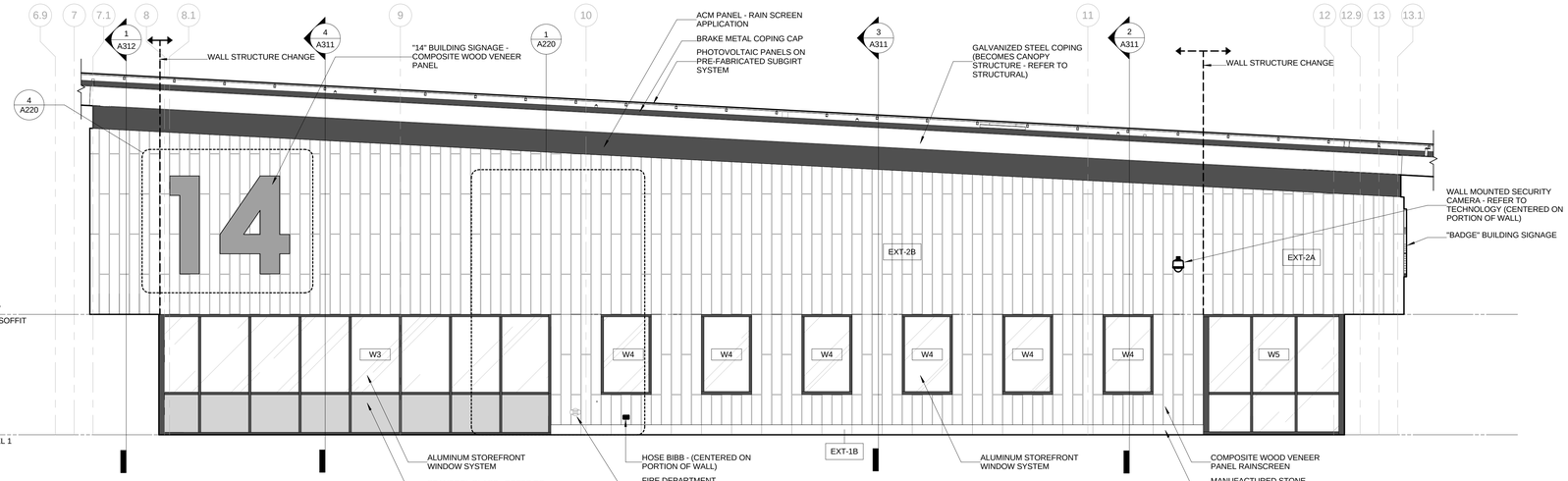

3 ENLARGED ELEVATION - WEST
1/4" = 1'-0"

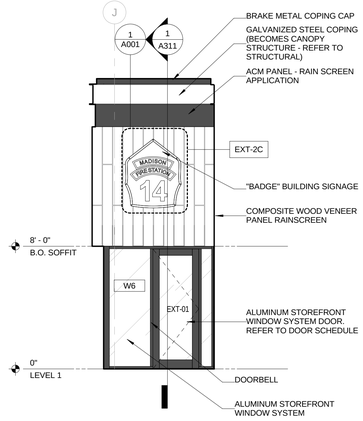

4 ENLARGED ELEVATION - SOUTH
1/4" = 1'-0"

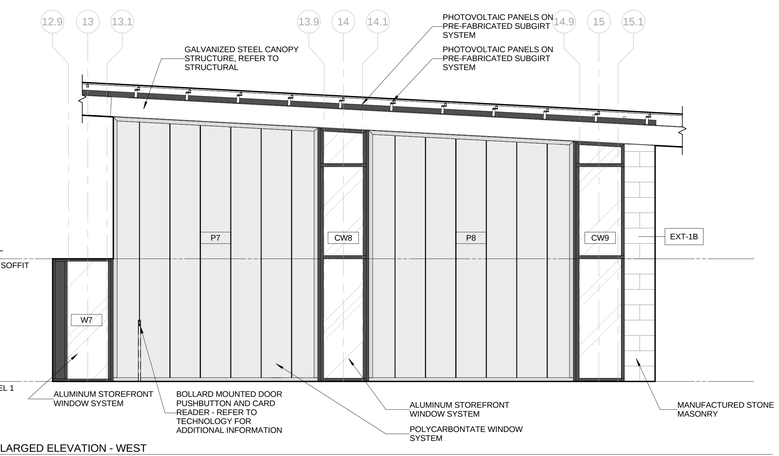

5 ENLARGED ELEVATION - WEST
1/4" = 1'-0"

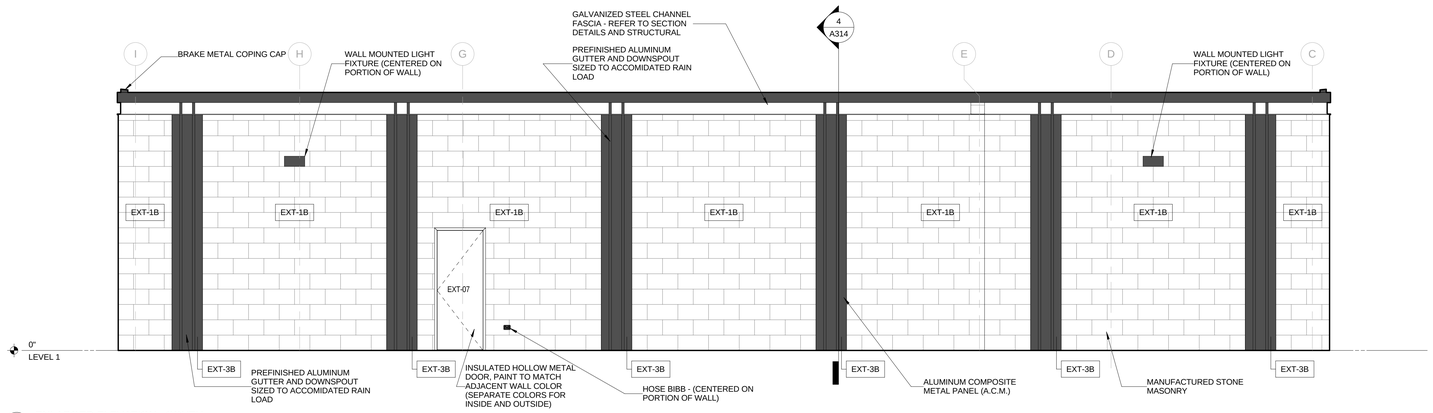

6 ENLARGED ELEVATION - SOUTH
1/4" = 1'-0"

OPN ARCHITECTS
301 N BROOM STREET #100
MADISON, WI 53703
608-819-0260 PHONE
www.opnarchitects.com
opn@opnarchitects.com

All reports, plans, specifications, computer files, field data, notes and other documents and instruments prepared by OPN Architects, Inc. as instruments of service shall remain the property of OPN Architects, Inc. OPN Architects, Inc. shall retain all common law, statutory and other reserved rights, including the copyright thereto.

© 2017 OPN Architects, Inc.

Owner
City of Madison Fire Department
314 W. Dayton St.
Madison, WI 53703

Project
Madison Fire Station 14
3201 Dairy Drive
Madison, WI 53718

Civil Engineer
Snyder & Associates, Inc
5010 Voges Rd
Madison WI, 53718
P. 608-838-0444

Structural Engineer
IMEG
1800 Deming Way #200
Middleton, WI 53562
P. 608-223-0444

Mechanical Engineer
IMEG
1800 Deming Way #200
Middleton, WI 53562
P. 608-223-0444

Electrical Engineer
IMEG
1800 Deming Way #200
Middleton, WI 53562
P. 608-223-0444

Key Plan

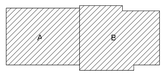

Sheet Issue Date	
BID DOCUMENTS	11/03/17

Revision	Date

BID DOCUMENTS

Drawing
ENLARGED EXTERIOR ELEVATIONS

City of Madison Contract No. **8027**
OPN Project No. **17207000**

A210

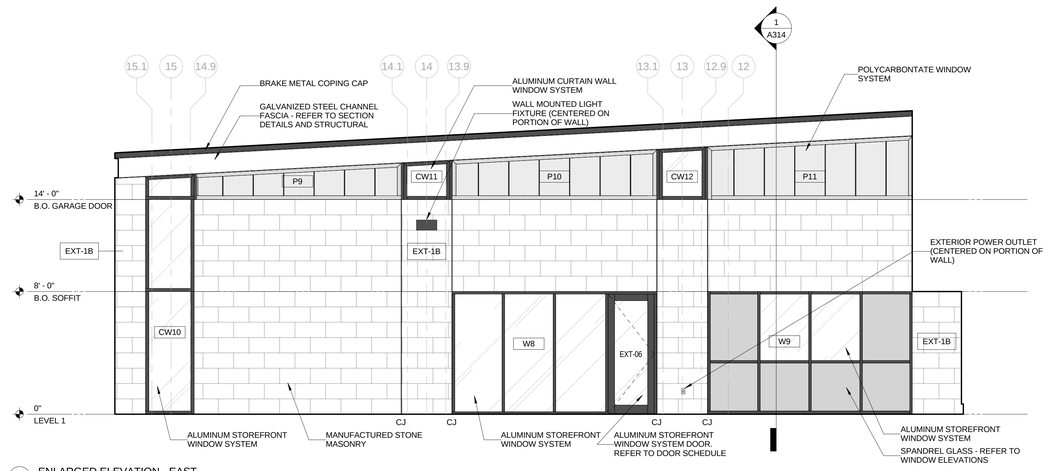

1 ENLARGED ELEVATION - EAST

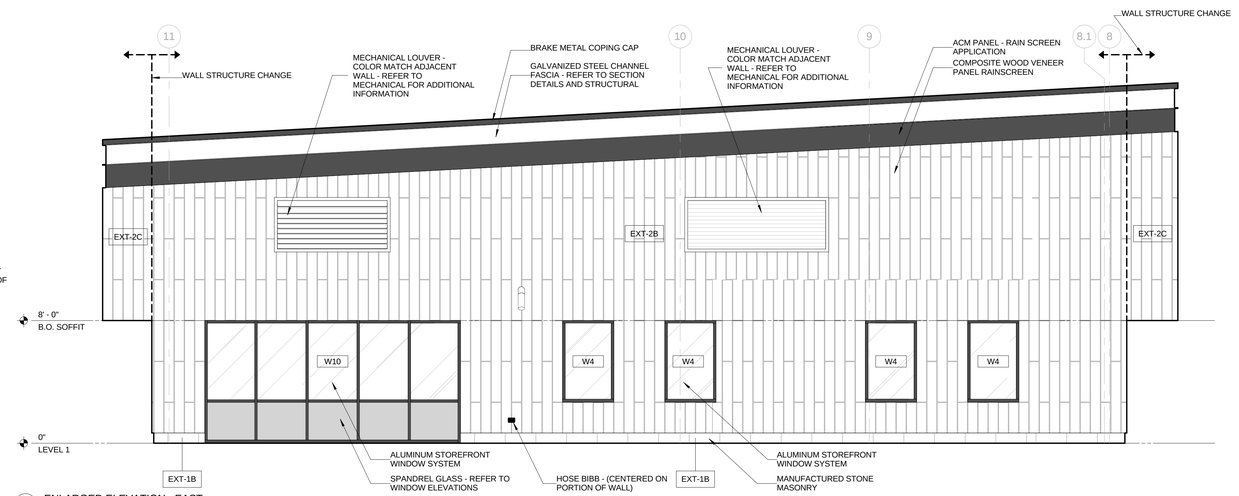

2 ENLARGED ELEVATION - EAST
1/4" = 1'-0"

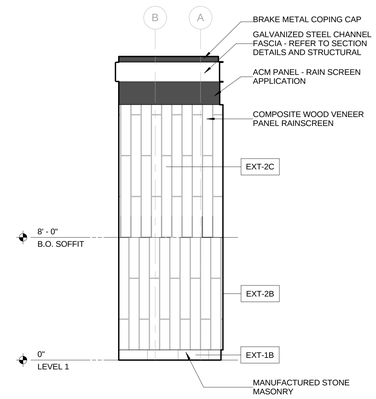

3 ENLARGED ELEVATION - SOUTH
1/4" = 1'-0"

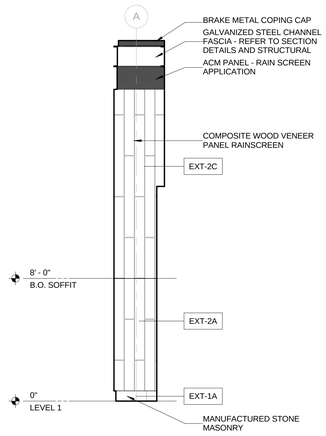

4 ENLARGED ELEVATION - NORTH
1/4" = 1'-0"

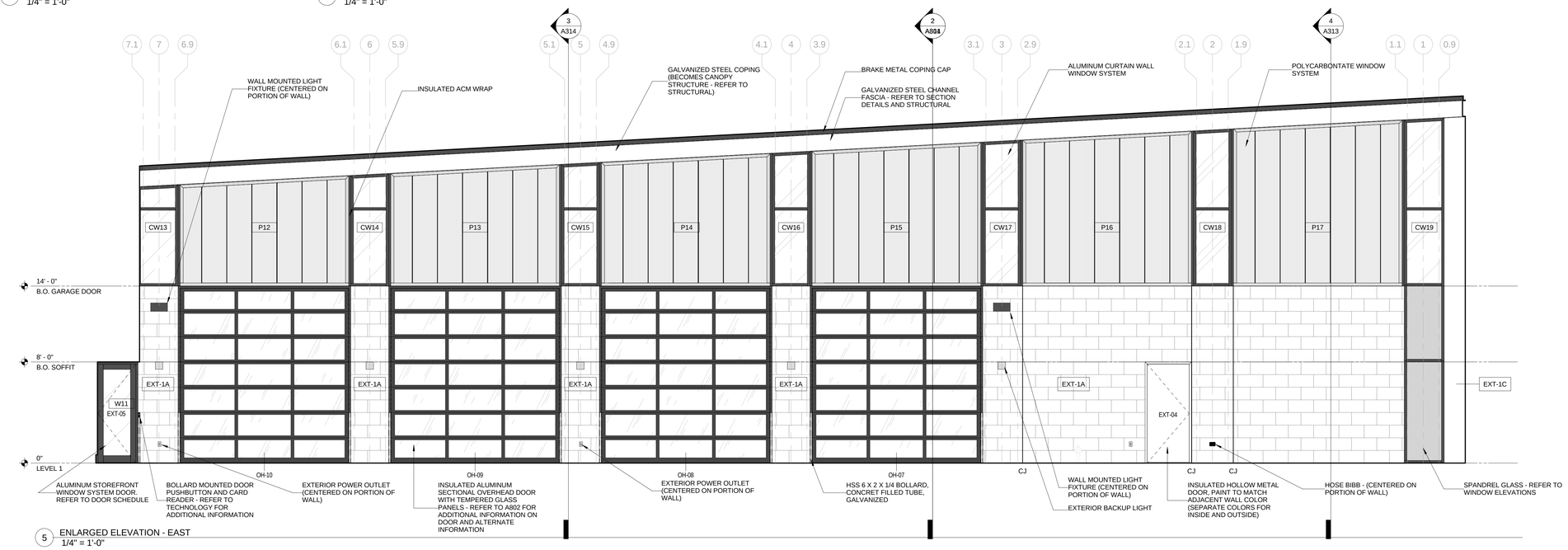

5 ENLARGED ELEVATION - EAST
1/4" = 1'-0"

OPN ARCHITECTS
301 N BROOM STREET #100
MADISON, WI 53703
608-819-0260 PHONE
www.opnarchitects.com
opn@opnarchitects.com

All reports, plans, specifications, computer files, field data, notes and other documents and instruments prepared by OPN Architects, Inc. as instruments of service shall remain the property of OPN Architects, Inc. OPN Architects, Inc. shall retain all common law, statutory and other reserved rights, including the copyright thereto.

© 2017 OPN Architects, Inc.

Owner
City of Madison Fire Department
314 W. Dayton St.
Madison, WI 53703

Project
Madison Fire Station 14
3201 Dairy Drive
Madison, WI 53718

Civil Engineer
Snyder & Associates, Inc
5010 Voges Rd
Madison WI, 53718
P. 608-838-0444

Structural Engineer
IMEG
1800 Deming Way #200
Middleton, WI 53562
P. 608-223-0444

Mechanical Engineer
IMEG
1800 Deming Way #200
Middleton, WI 53562
P. 608-223-0444

Electrical Engineer
IMEG
1800 Deming Way #200
Middleton, WI 53562
P. 608-223-0444

Key Plan

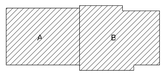

Sheet Issue Date	
BID DOCUMENTS	11/03/17

Revision	Date

BID DOCUMENTS

Drawing
ENLARGED EXTERIOR ELEVATIONS

City of Madison Contract No. **8027**
OPN Project No. **17207000**

A211

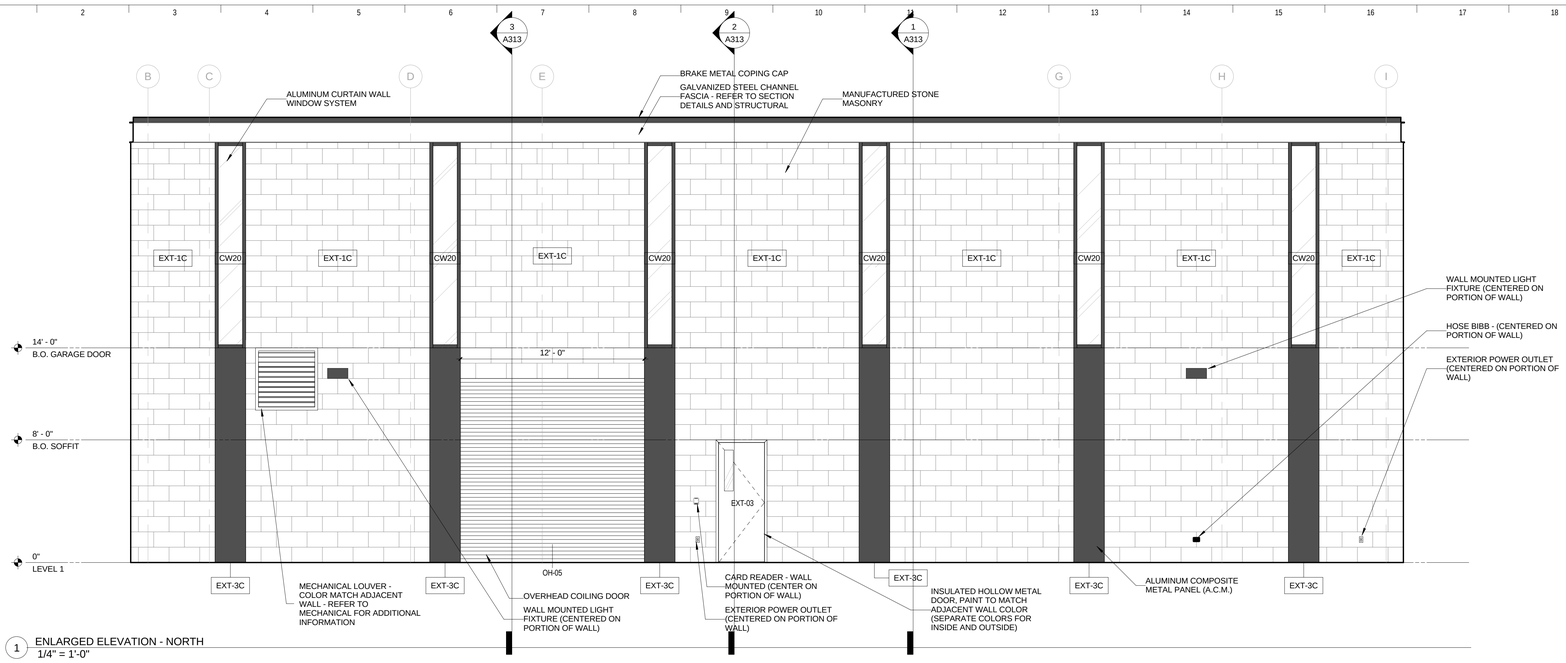

1 ENLARGED ELEVATION - NORTH
1/4" = 1'-0"

OPN ARCHITECTS

301 N BROOM STREET #100
MADISON, WI 53703
608-819-0260 PHONE
www.opnarchitects.com
opn@opnarchitects.com

All reports, plans, specifications, computer files, field data, notes and other documents and instruments prepared by OPN Architects, Inc. as instruments of service shall remain the property of OPN Architects, Inc. OPN Architects, Inc. shall retain all common law, statutory and other reserved rights, including the copyright thereto.

© 2017 OPN Architects, Inc.

Owner

City of Madison Fire Department

314 W. Dayton St.
Madison, WI 53703

Project

Madison Fire Station 14

3201 Dairy Drive
Madison, WI 53718

Civil Engineer

Snyder & Associates, Inc

5010 Voges Rd
Madison WI, 53718
P. 608-838-0444

Structural Engineer

IMEG

1800 Deming Way #200
Middleton, WI 53562
P. 608-223-0444

Mechanical Engineer

IMEG

1800 Deming Way #200
Middleton, WI 53562
P. 608-223-0444

Electrical Engineer

IMEG

1800 Deming Way #200
Middleton, WI 53562
P. 608-223-0444

Key Plan

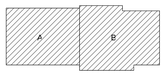

Sheet Issue Date

BID DOCUMENTS 11/03/17

Revison Date

BID DOCUMENTS

Drawing

ENLARGED EXTERIOR ELEVATIONS

City of Madison Contract No. **8027**
OPN Project No. **17207000**

A212

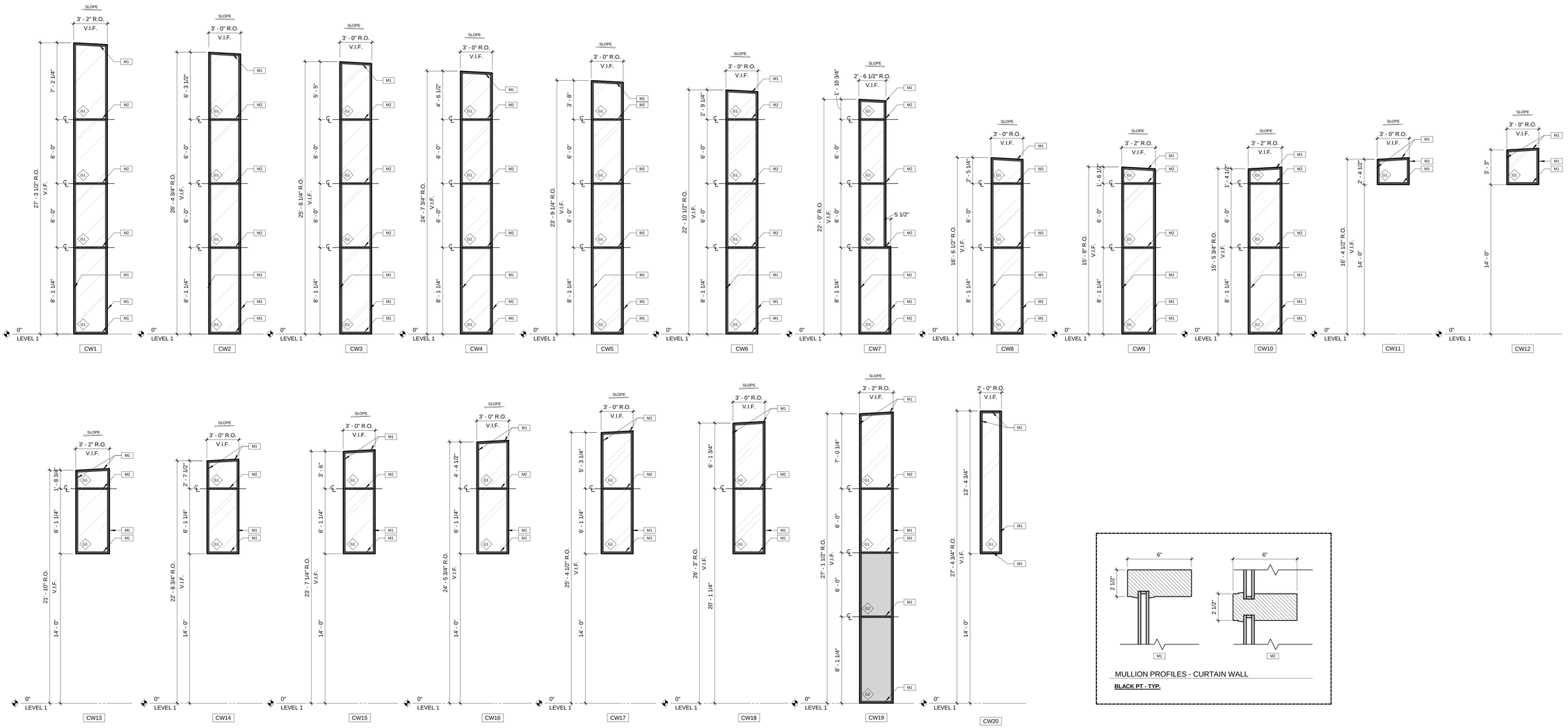

CURTAIN WALL - WINDOW PROFILES

MULLION PROFILES - CURTAIN WALL

BLACK PT - TYP.

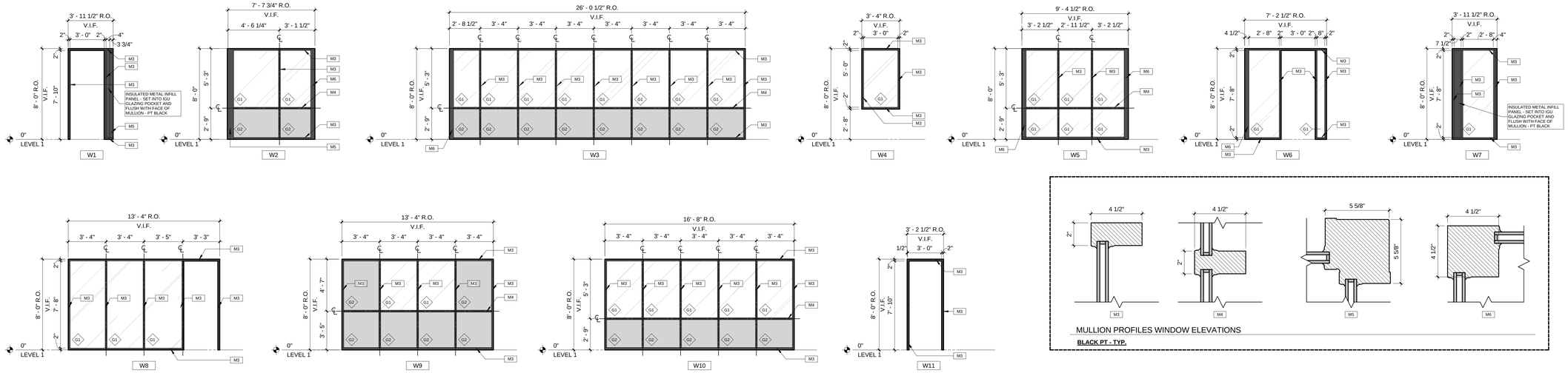

STOREFRONT - WINDOW PROFILES

MULLION PROFILES WINDOW ELEVATIONS

BLACK PT - TYP.

OPN ARCHITECTS

301 N BROOM STREET #100
MADISON, WI 53703
608-819-0260 PHONE
www.opnarchitects.com
opn@opnarchitects.com

All reports, plans, specifications, computer files, field data, notes and other documents and instruments prepared by OPN Architects, Inc. as instruments of service shall remain the property of OPN Architects, Inc. OPN Architects, Inc. shall retain all common law, statutory and other reserved rights, including the copyright thereto.

© 2017 OPN Architects, Inc.

Owner

City of Madison Fire Department

314 W. Dayton St.
Madison, WI 53703

Project

Madison Fire Station 14

3201 Dairy Drive
Madison, WI 53718

Civil Engineer

Snyder & Associates, Inc

5010 Voges Rd
Madison WI, 53718
P. 608-838-0444

Structural Engineer

IMEG

1800 Deming Way #200
Middleton, WI 53562
P. 608-223-0444

Mechanical Engineer

IMEG

1800 Deming Way #200
Middleton, WI 53562
P. 608-223-0444

Electrical Engineer

IMEG

1800 Deming Way #200
Middleton, WI 53562
P. 608-223-0444

Key Plan

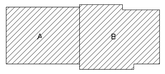

Sheet Issue Date

BID DOCUMENTS 11/03/17

Revision Date

BID DOCUMENTS

Drawing

WINDOW ELEVATIONS

City of Madison Contract No. **8027**
OPN Project No. **17207000**

A215

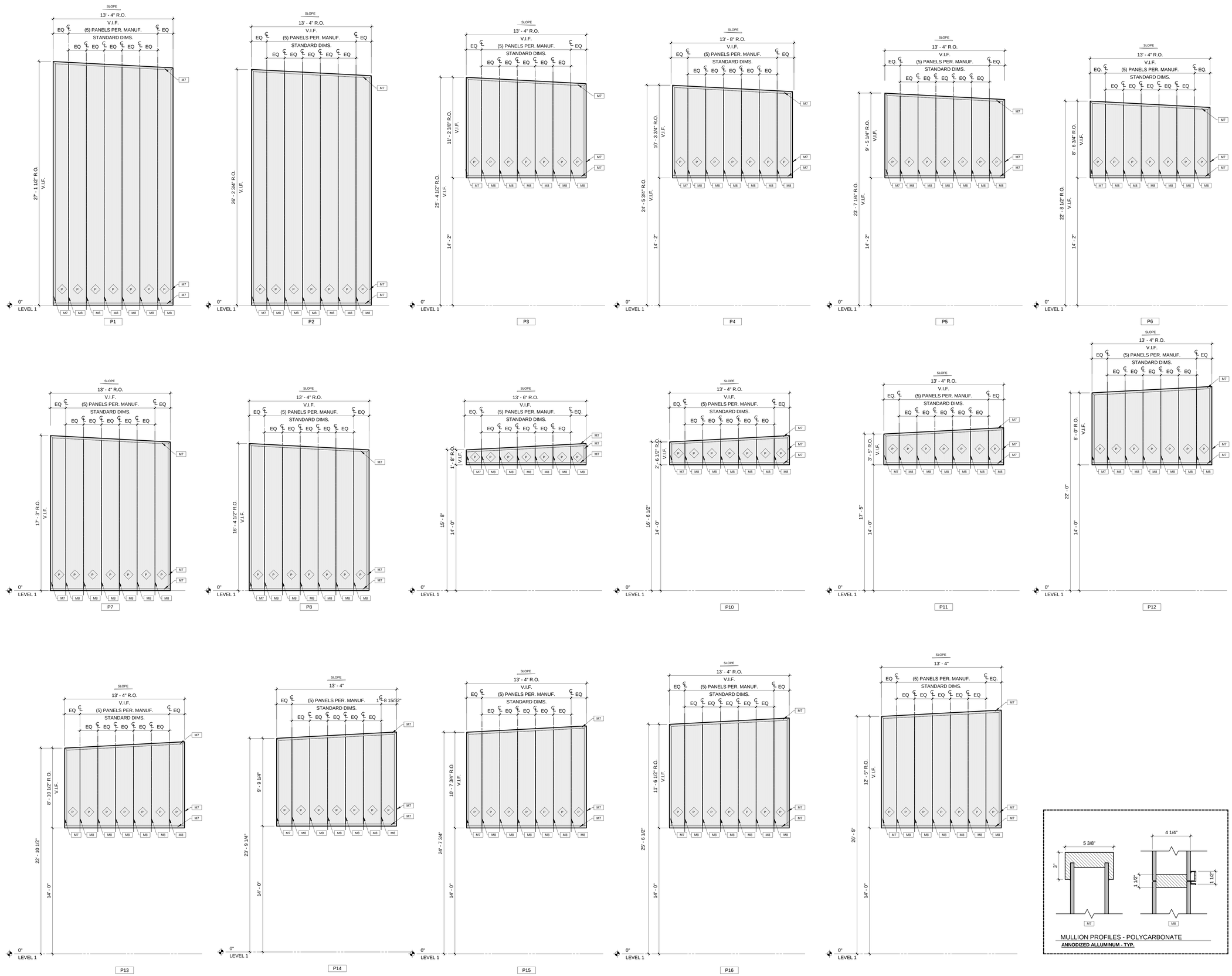

MULLION PROFILES - POLYCARBONATE

ANNODIZED ALLUMINUM - TYP.

GLAZING LEGEND

VISION TEMPERED GLASS
INSULATED GLASS UNITS
VISION GLAZING
LOW-E

SPANDREL TEMPERED GLASS
INSULATED GLASS UNITS
SPANDREL GLASS
LOW-E

POLYCARBONATE PANELS
ICE WHITE MATTE (BOTH SIDES)
10 MM UNIT
THERMALLY BROKEN FRAME

OPN ARCHITECTS

301 N BROOM STREET #100
MADISON, WI 53703
608-819-0260 PHONE
www.opnarchitects.com
opn@opnarchitects.com

All reports, plans, specifications, computer files, field data, notes and other documents and instruments prepared by OPN Architects, Inc. as instruments of service shall remain the property of OPN Architects, Inc. OPN Architects, Inc. shall retain all common law, statutory and other reserved rights, including the copyright thereto.

© 2017 OPN Architects, Inc.

Owner

City of Madison Fire Department

314 W. Dayton St.
Madison, WI 53703

Project

Madison Fire Station 14

3201 Dairy Drive
Madison, WI 53718

Civil Engineer

Snyder & Associates, Inc

5010 Voges Rd
Madison WI, 53718
P. 608-838-0444

Structural Engineer

IMEG

1800 Deming Way #200
Middleton, WI 53562
P. 608-223-0444

Mechanical Engineer

IMEG

1800 Deming Way #200
Middleton, WI 53562
P. 608-223-0444

Electrical Engineer

IMEG

1800 Deming Way #200
Middleton, WI 53562
P. 608-223-0444

Key Plan

A B

Sheet Issue Date

BID DOCUMENTS 11/03/17

Revision Date

BID DOCUMENTS

Drawing

POLYCARBONATE ELEVATIONS

City of Madison Contract No. **8027**
OPN Project No. **17207000**

A216

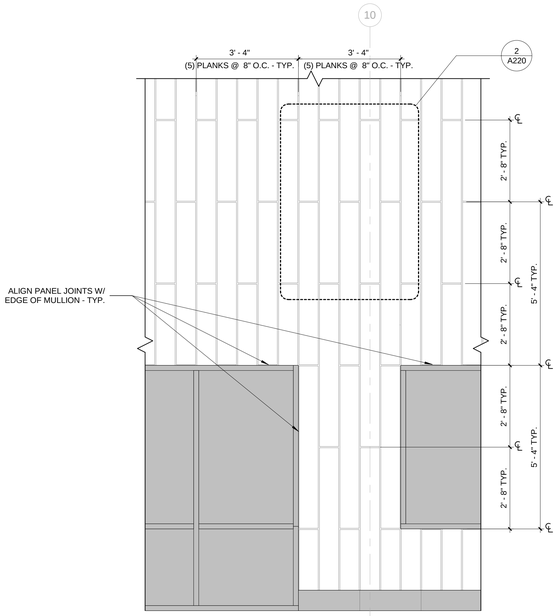

1 TYPICAL COMPOSITE WOOD VENNER PANEL - CONFIGURATION
1/2" = 1'-0"

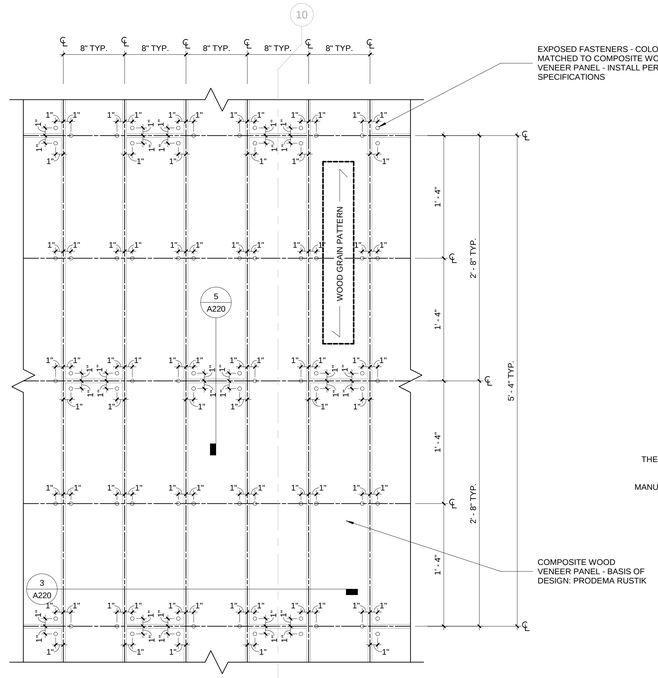

2 TYPICAL COMPOSITE WOOD VENEER PANEL - CONNECTIONS
1 1/2" = 1'-0"

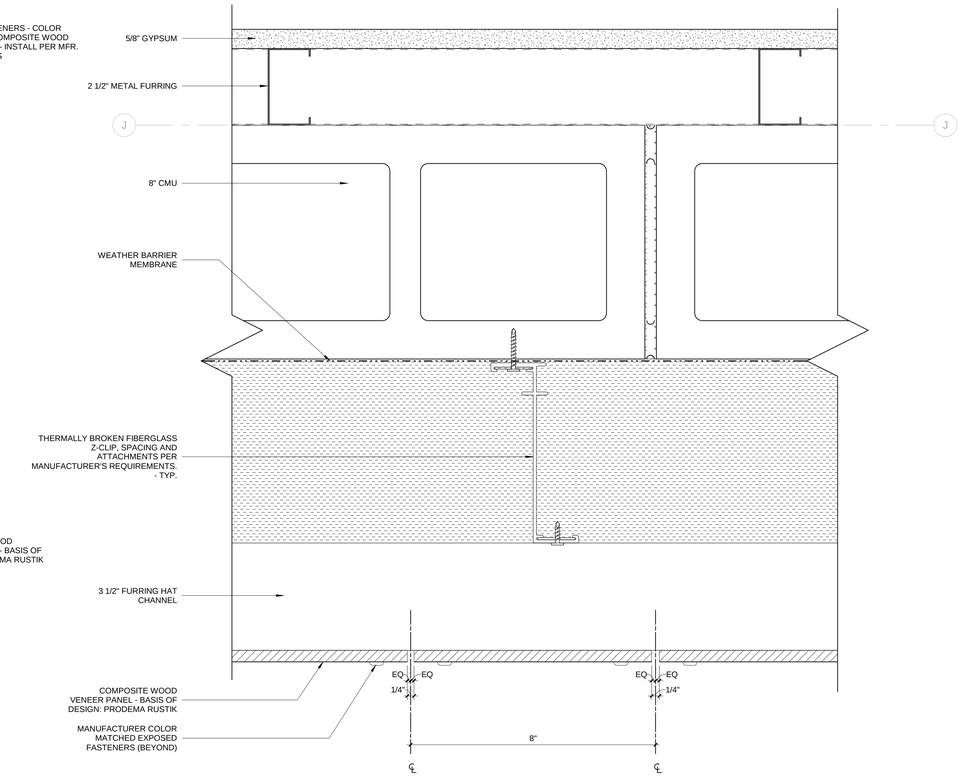

3 COMPOSITE WOOD VENEER PANEL - PLAN DETAIL
6" = 1'-0"

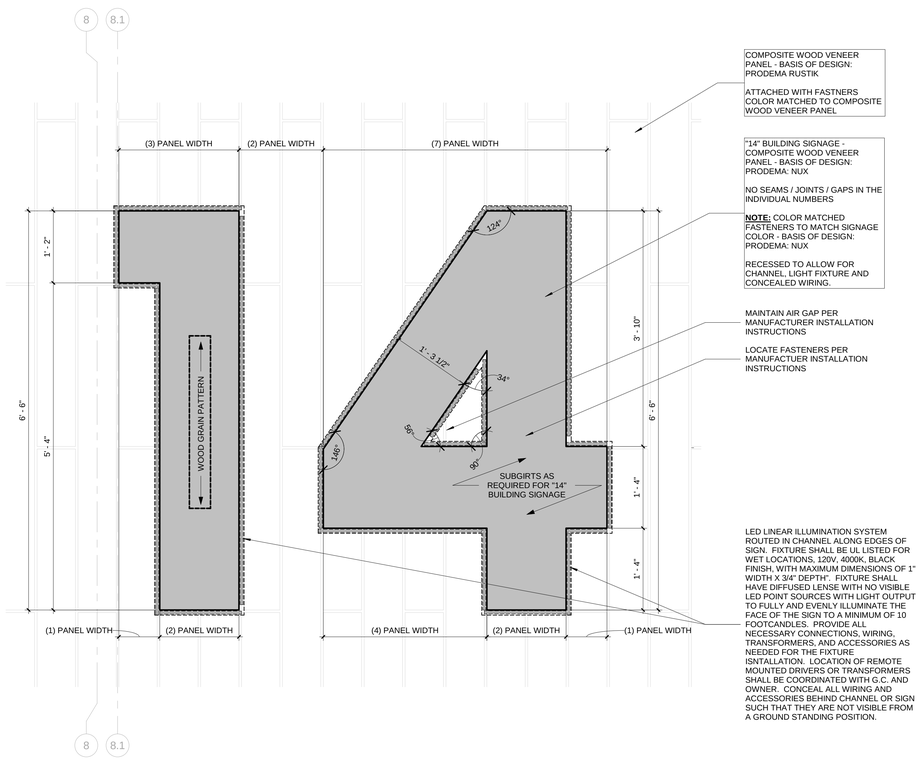

4 COMPOSITE WOOD VENEER PANEL - "14" BUILDING SIGNAGE
1" = 1'-0"

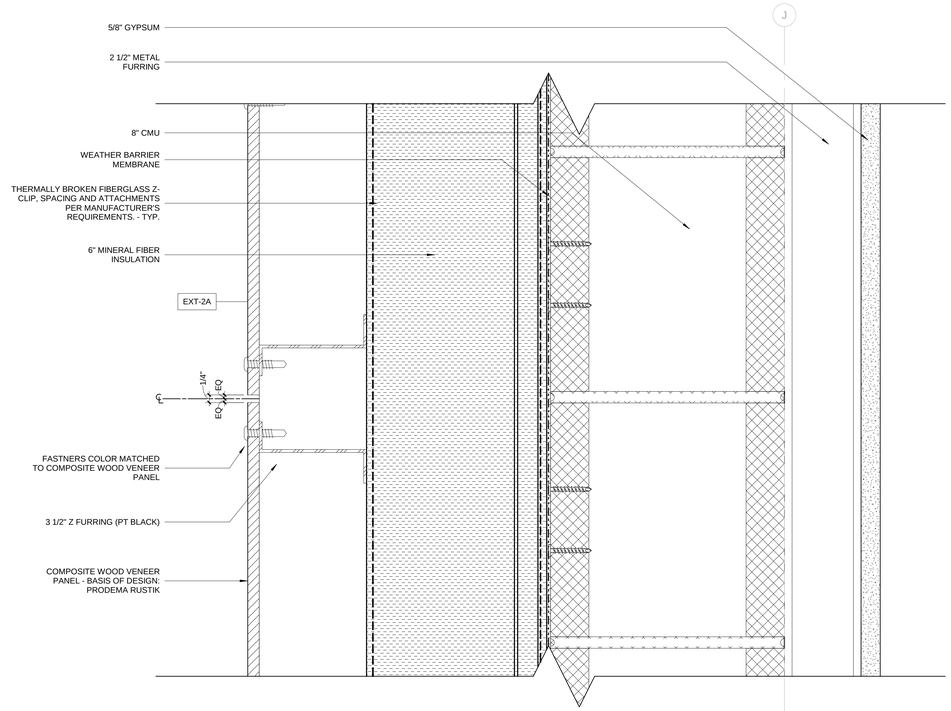

5 COMPOSITE WOOD VENEER PANEL - SECTION
6" = 1'-0"

OPN ARCHITECTS

301 N BROOM STREET #100
MADISON, WI 53703
608-819-0260 PHONE
www.opnarchitects.com
opn@opnarchitects.com

All reports, plans, specifications, computer files, field data, notes and other documents and instruments prepared by OPN Architects, Inc. as instruments of service shall remain the property of OPN Architects, Inc. OPN Architects, Inc. shall retain all common law, statutory and other reserved rights, including the copyright thereto.

© 2017 OPN Architects, Inc.

Owner

City of Madison Fire Department

314 W. Dayton St.
Madison, WI 53703

Project

Madison Fire Station 14

3201 Dairy Drive
Madison, WI 53718

Civil Engineer

Snyder & Associates, Inc

5010 Voges Rd
Madison WI, 53718
P. 608-838-0444

Structural Engineer

IMEG

1800 Deming Way #200
Middleton, WI 53562
P. 608-223-0444

Mechanical Engineer

IMEG

1800 Deming Way #200
Middleton, WI 53562
P. 608-223-0444

Electrical Engineer

IMEG

1800 Deming Way #200
Middleton, WI 53562
P. 608-223-0444

Key Plan

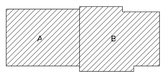

Sheet Issue Date

BID DOCUMENTS 11/03/17

Revison Date

BID DOCUMENTS

Drawing

STANDARD DETAILS

City of Madison Contract No. **8027**
OPN Project No. **17207000**

A220

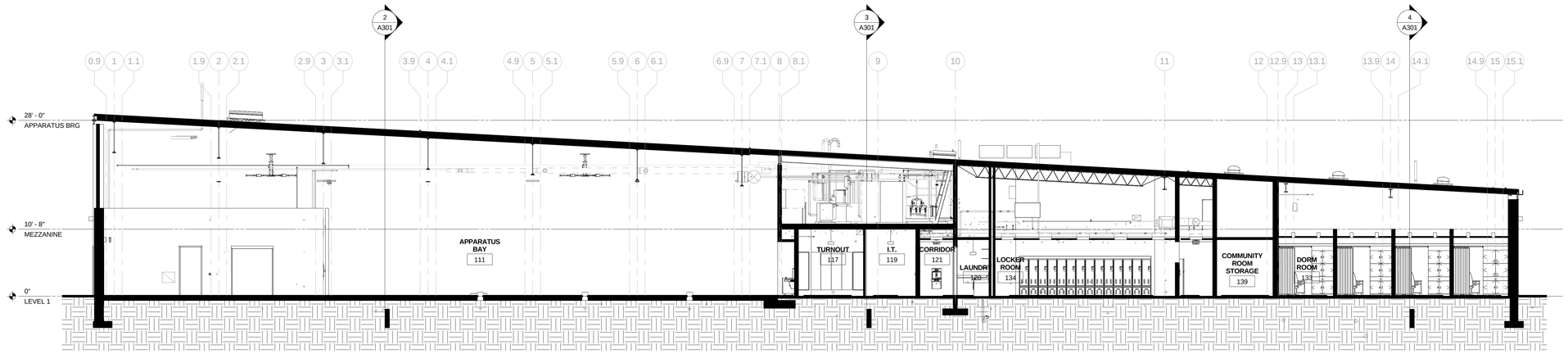

1 BUILDING SECTION
1/8" = 1'-0"

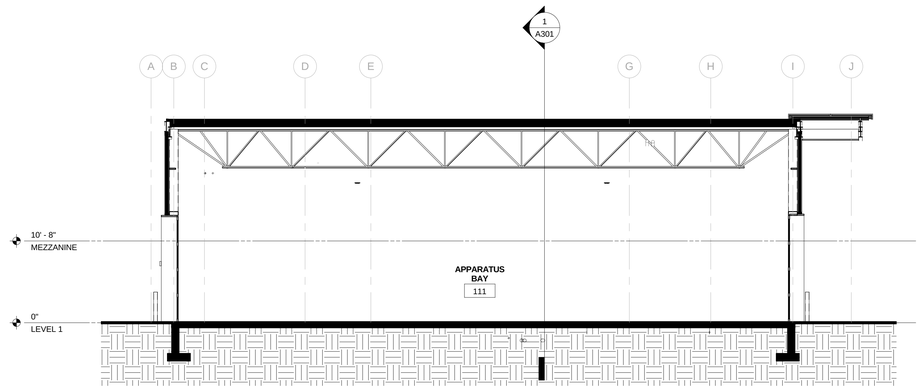

2 BUILDING SECTION
1/8" = 1'-0"

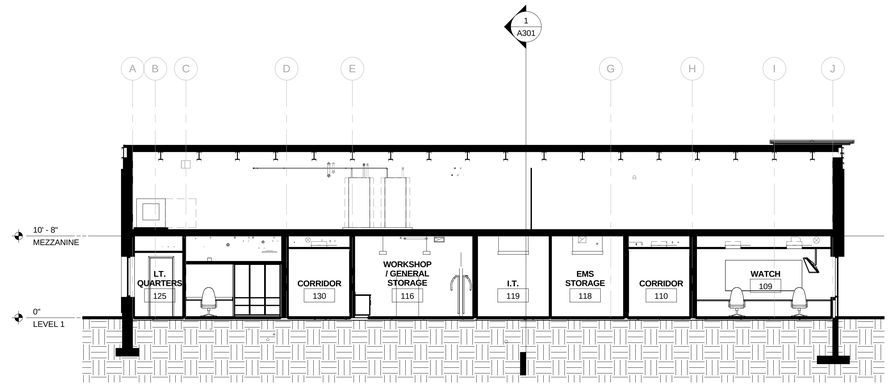

3 BUILDING SECTION
1/8" = 1'-0"

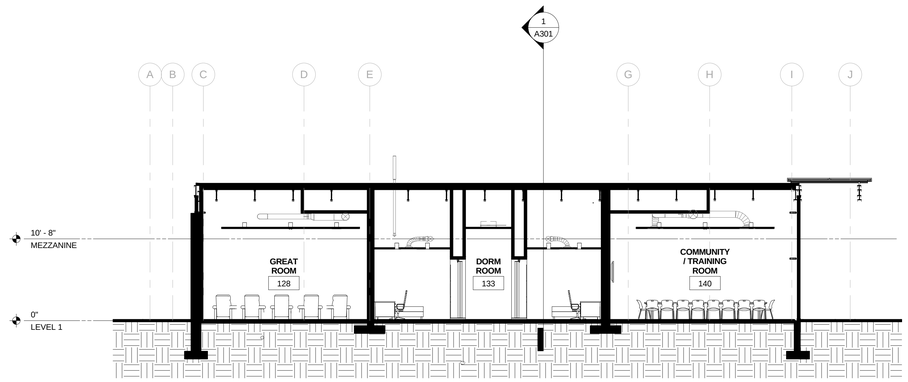

4 BUILDING SECTION
1/8" = 1'-0"

OPN ARCHITECTS

301 N BROOM STREET #100
MADISON, WI 53703
608-819-0260 PHONE
www.opnarchitects.com
opn@opnarchitects.com

All reports, plans, specifications, computer files, field data, notes and other documents and instruments prepared by OPN Architects, Inc. as instruments of service shall remain the property of OPN Architects, Inc. OPN Architects, Inc. shall retain all common law, statutory and other reserved rights, including the copyright thereto.

© 2017 OPN Architects, Inc.

Owner
City of Madison Fire Department
314 W. Dayton St.
Madison, WI 53703

Project
Madison Fire Station 14
3201 Dairy Drive
Madison, WI 53718

Civil Engineer
Snyder & Associates, Inc
5010 Voges Rd
Madison WI, 53718
P. 608-838-0444

Structural Engineer
IMEG
1800 Deming Way #200
Middleton, WI 53562
P. 608-223-0444

Mechanical Engineer
IMEG
1800 Deming Way #200
Middleton, WI 53562
P. 608-223-0444

Electrical Engineer
IMEG
1800 Deming Way #200
Middleton, WI 53562
P. 608-223-0444

Key Plan

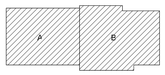

Sheet Issue Date
BID DOCUMENTS 11/03/17

Revision Date

BID DOCUMENTS

Drawing
BUILDING SECTIONS

City of Madison Contract No. **8027**
OPN Project No. **17207000**

A301

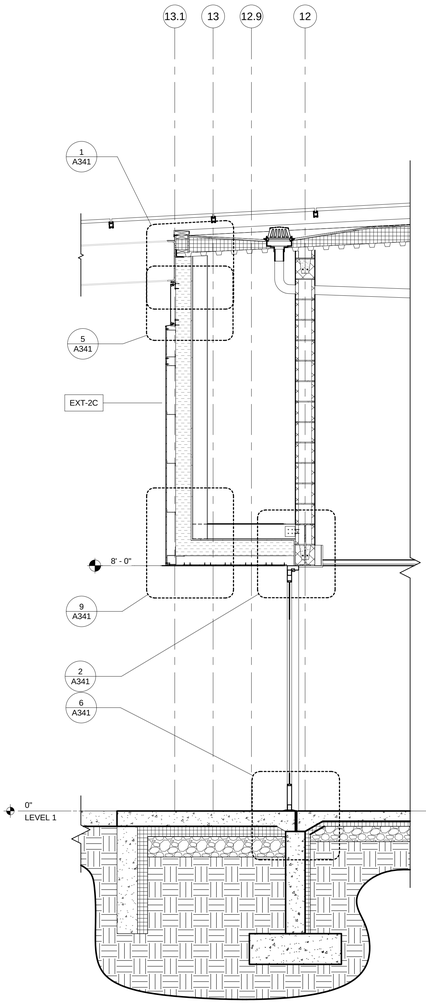

1 WALL SECTION
1/2" = 1'-0"

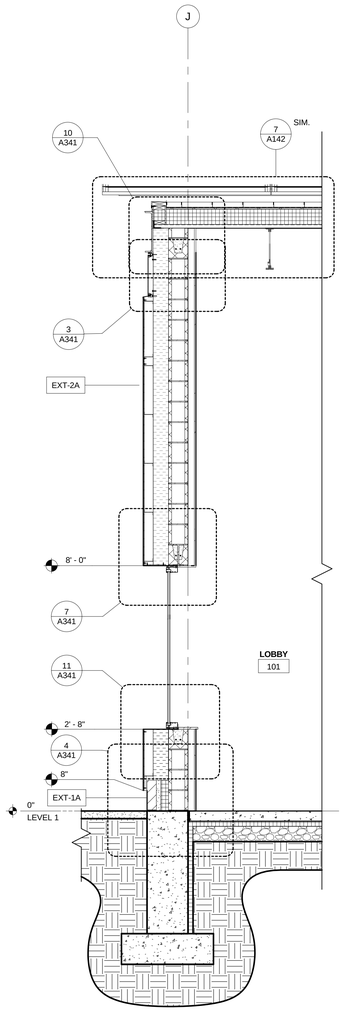

2 WALL SECTION
1/2" = 1'-0"

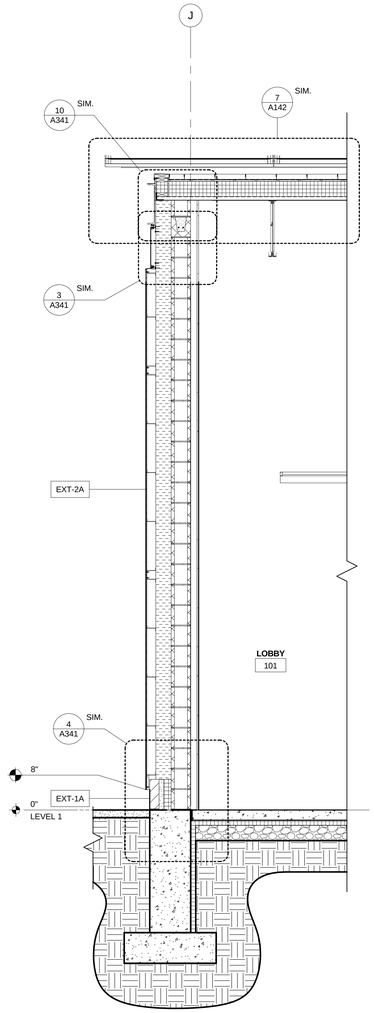

3 WALL SECTION
1/2" = 1'-0"

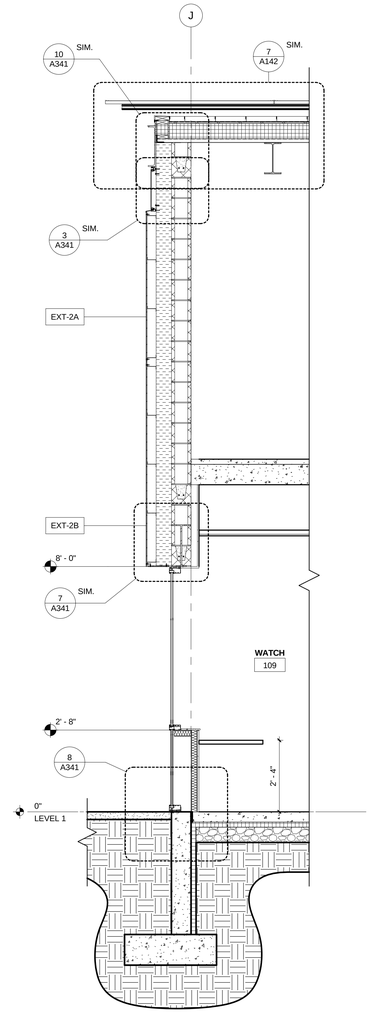

4 WALL SECTION
1/2" = 1'-0"

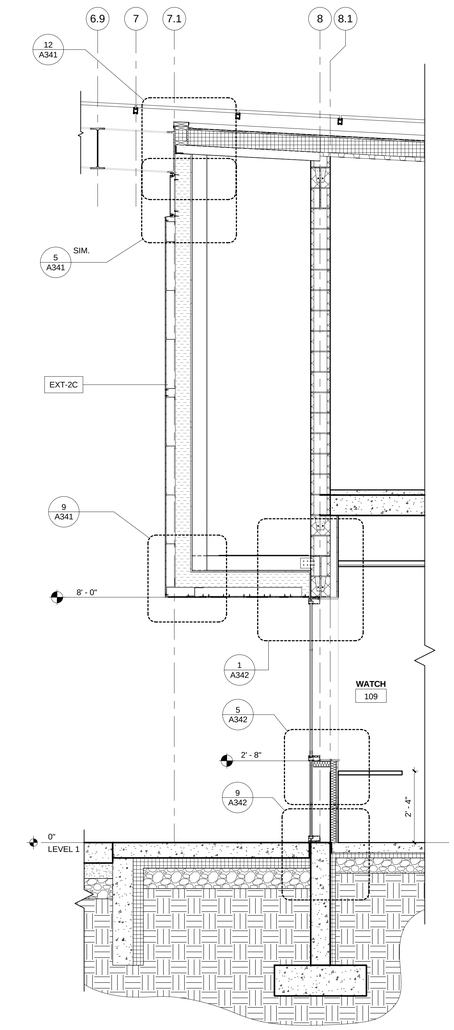

5 WALL SECTION
1/2" = 1'-0"

OPN ARCHITECTS

301 N BROOM STREET #100
MADISON, WI 53703
608-819-0260 PHONE
www.opnarchitects.com
opn@opnarchitects.com

All reports, plans, specifications, computer files, field data, notes and other documents and instruments prepared by OPN Architects, Inc. as instruments of service shall remain the property of OPN Architects, Inc. OPN Architects, Inc. shall retain all common law, statutory and other reserved rights, including the copyright thereto.

© 2017 OPN Architects, Inc.

Owner

City of Madison Fire Department

314 W. Dayton St.
Madison, WI 53703

Project

Madison Fire Station 14

3201 Dairy Drive
Madison, WI 53718

Civil Engineer

Snyder & Associates, Inc

5010 Voges Rd
Madison WI, 53718
P. 608-838-0444

Structural Engineer

IMEG

1800 Deming Way #200
Middleton, WI 53562
P. 608-223-0444

Mechanical Engineer

IMEG

1800 Deming Way #200
Middleton, WI 53562
P. 608-223-0444

Electrical Engineer

IMEG

1800 Deming Way #200
Middleton, WI 53562
P. 608-223-0444

Key Plan

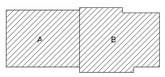

Sheet Issue Date

BID DOCUMENTS 11/03/17

Revision Date

BID DOCUMENTS

Drawing

WALL SECTIONS

City of Madison Contract No. **8027**
OPN Project No. **17207000**

A311

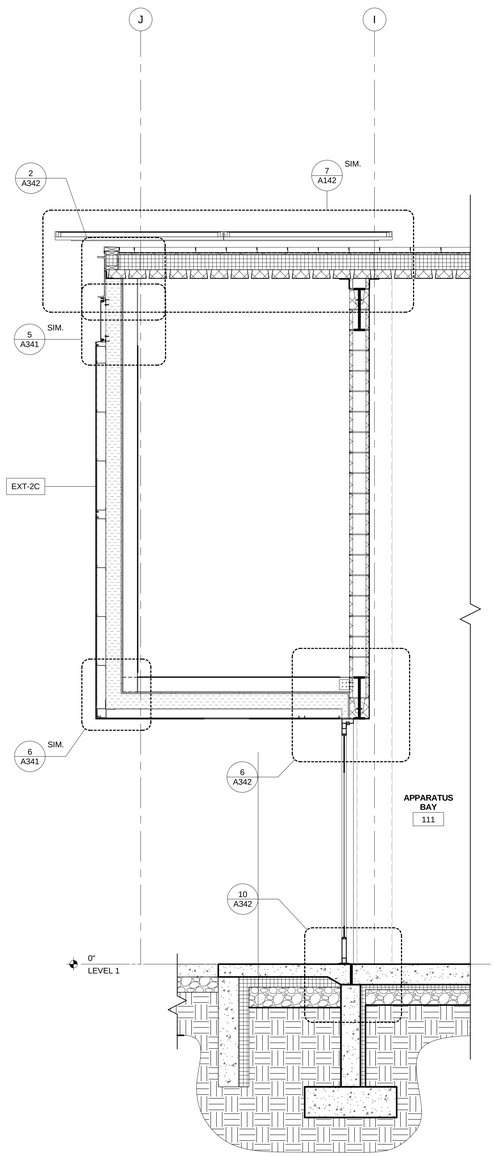

1 WALL SECTION
1/2" = 1'-0"

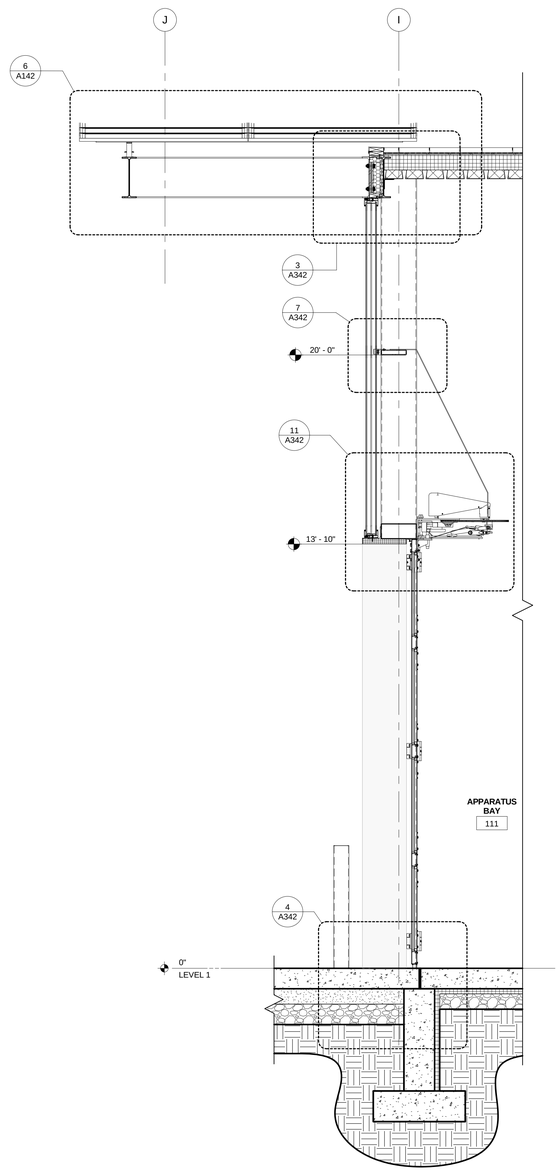

2 WALL SECTION
1/2" = 1'-0"

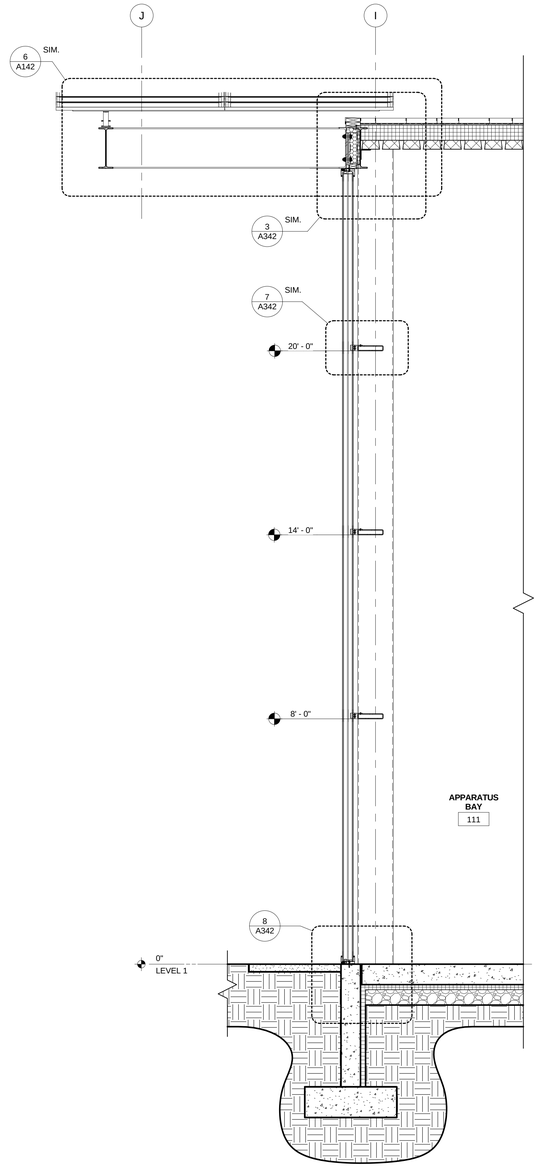

3 WALL SECTION
1/2" = 1'-0"

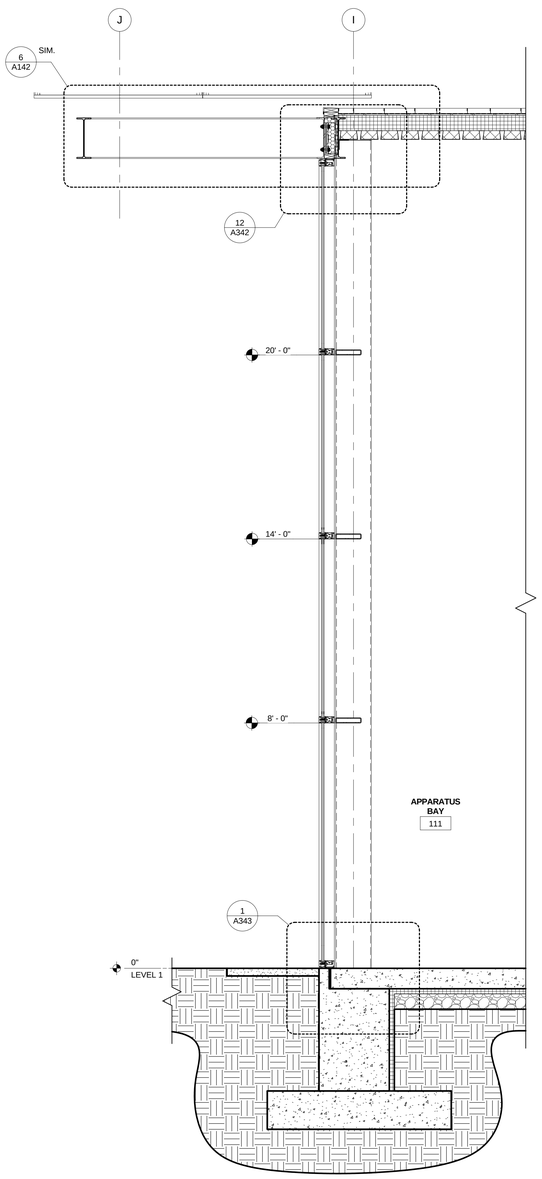

4 WALL SECTION
1/2" = 1'-0"

OPN ARCHITECTS
301 N BROOM STREET #100
MADISON, WI 53703
608-819-0260 PHONE
www.opnarchitects.com
opn@opnarchitects.com

All reports, plans, specifications, computer files, field data, notes and other documents and instruments prepared by OPN Architects, Inc. as instruments of service shall remain the property of OPN Architects, Inc. OPN Architects, Inc. shall retain all common law, statutory and other reserved rights, including the copyright thereto.

© 2017 OPN Architects, Inc.

Owner
City of Madison Fire Department
314 W. Dayton St.
Madison, WI 53703

Project
Madison Fire Station 14
3201 Dairy Drive
Madison, WI 53718

Civil Engineer
Snyder & Associates, Inc
5010 Voges Rd
Madison WI, 53718
P. 608-838-0444

Structural Engineer
IMEG
1800 Deming Way #200
Middleton, WI 53562
P. 608-223-0444

Mechanical Engineer
IMEG
1800 Deming Way #200
Middleton, WI 53562
P. 608-223-0444

Electrical Engineer
IMEG
1800 Deming Way #200
Middleton, WI 53562
P. 608-223-0444

Key Plan

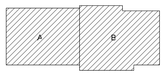

Sheet Issue Date
BID DOCUMENTS 11/03/17

Revision Date

BID DOCUMENTS

Drawing
WALL SECTIONS

City of Madison Contract No. **8027**
OPN Project No. **17207000**

A312

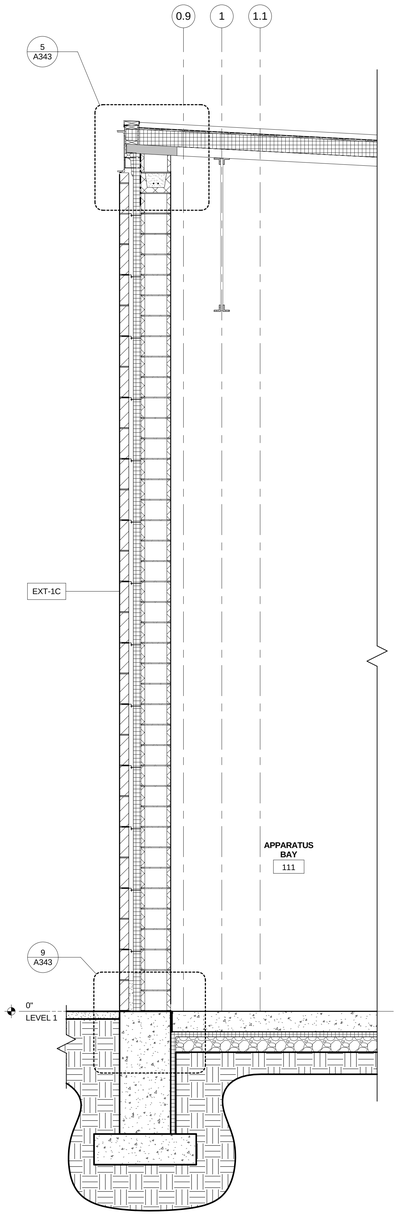

1 WALL SECTION
1/2" = 1'-0"

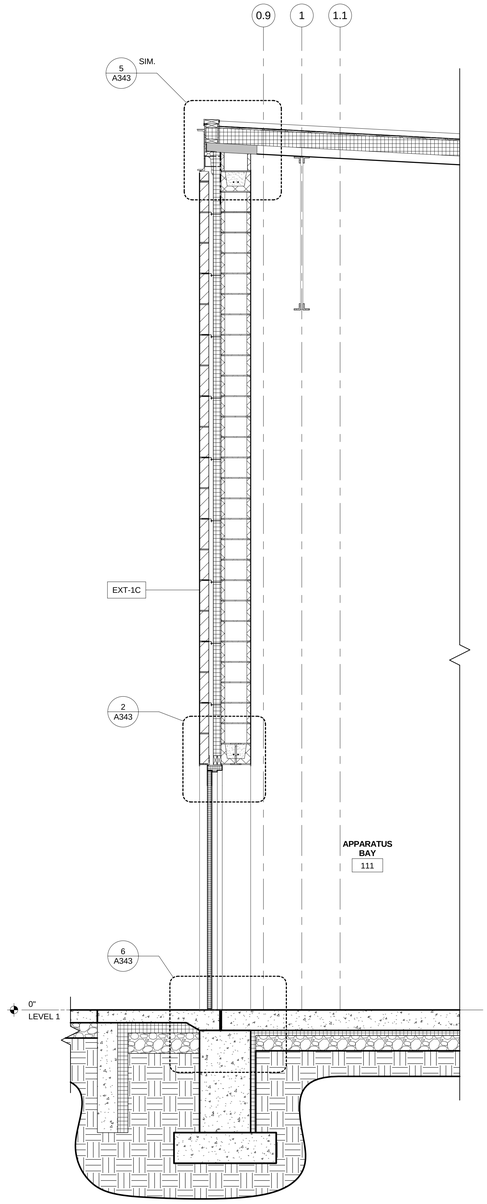

2 WALL SECTION
1/2" = 1'-0"

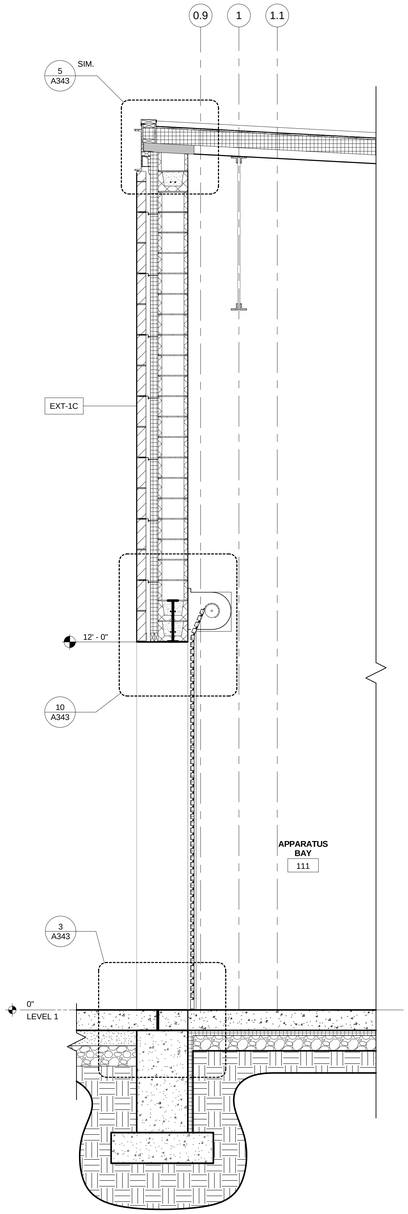

3 WALL SECTION
1/2" = 1'-0"

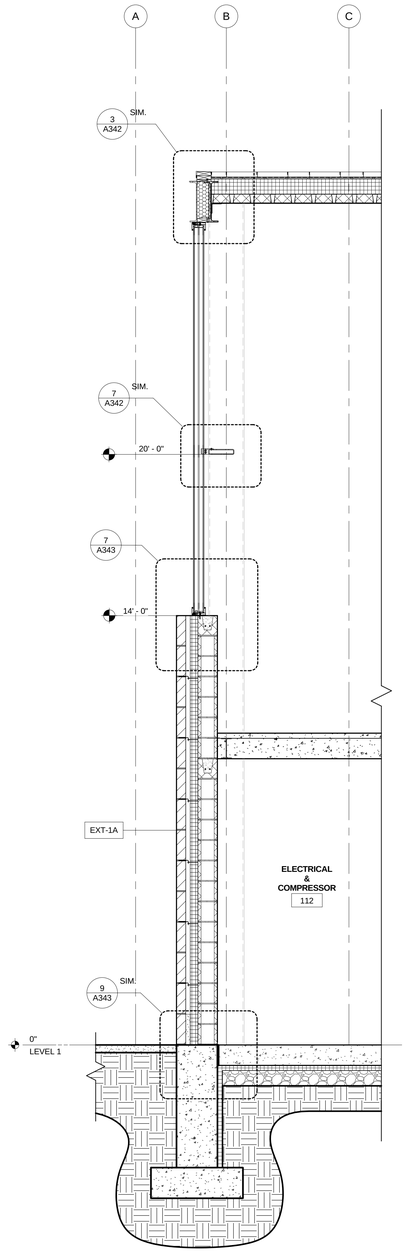

4 WALL SECTION
1/2" = 1'-0"

OPN ARCHITECTS

301 N BROOM STREET #100
MADISON, WI 53703
608-819-0260 PHONE
www.opnarchitects.com
opn@opnarchitects.com

All reports, plans, specifications, computer files, field data, notes and other documents and instruments prepared by OPN Architects, Inc. as instruments of service shall remain the property of OPN Architects, Inc. OPN Architects, Inc. shall retain all common law, statutory and other reserved rights, including the copyright thereto.

© 2017 OPN Architects, Inc.

Owner

City of Madison Fire Department

314 W. Dayton St.
Madison, WI 53703

Project

Madison Fire Station 14

3201 Dairy Drive
Madison, WI 53718

Civil Engineer

Snyder & Associates, Inc

5010 Voges Rd
Madison WI, 53718
P. 608-838-0444

Structural Engineer

IMEG

1800 Deming Way #200
Middleton, WI 53562
P. 608-223-0444

Mechanical Engineer

IMEG

1800 Deming Way #200
Middleton, WI 53562
P. 608-223-0444

Electrical Engineer

IMEG

1800 Deming Way #200
Middleton, WI 53562
P. 608-223-0444

Key Plan

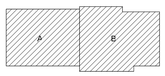

Sheet Issue Date	
BID DOCUMENTS	11/03/17

Revision	Date

BID DOCUMENTS

Drawing

WALL SECTIONS

City of Madison Contract No. **8027**
OPN Project No. **17207000**

A313

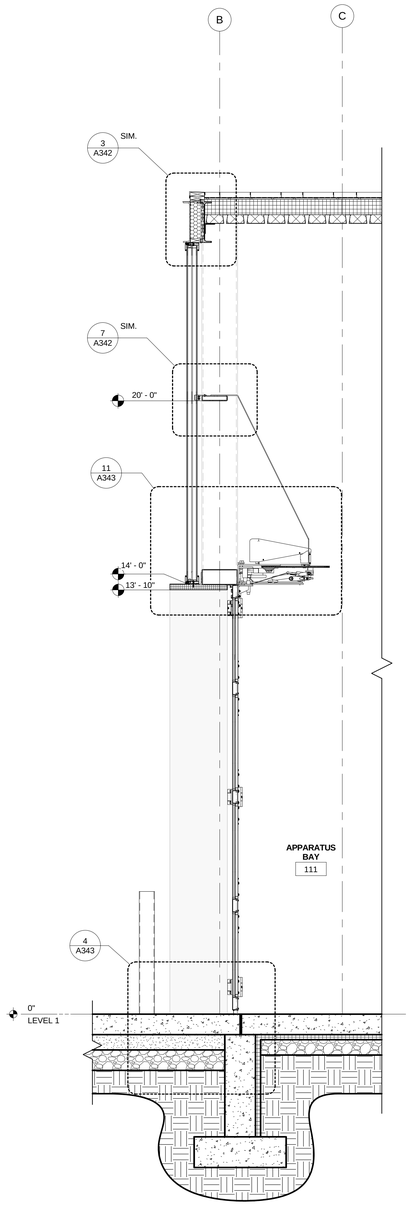

2 WALL SECTION
1/2" = 1'-0"

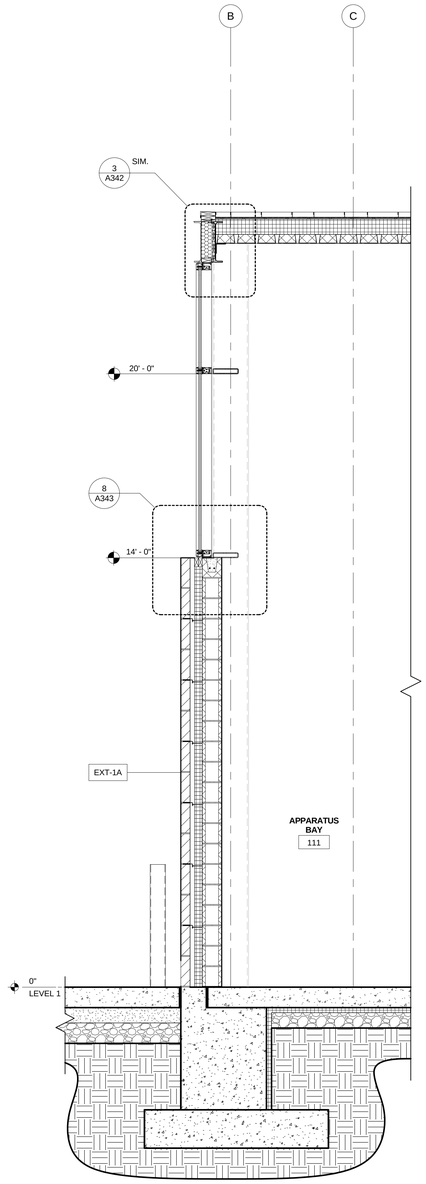

3 WALL SECTION
1/2" = 1'-0"

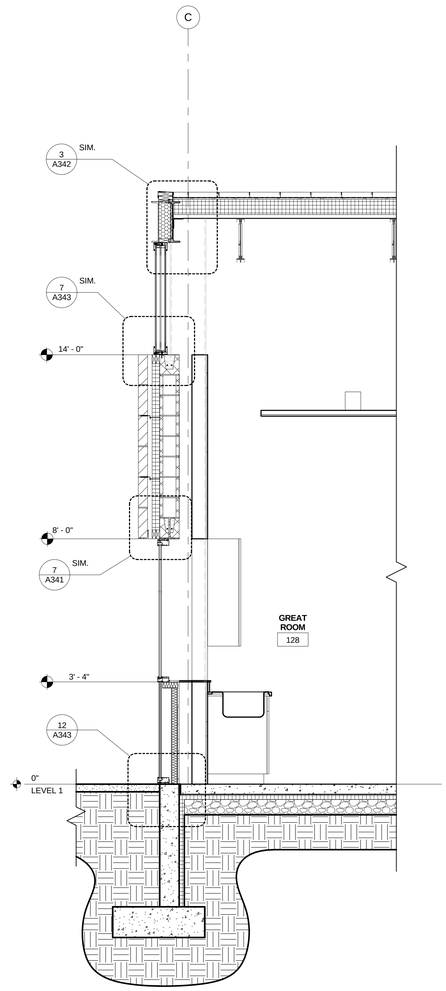

1 WALL SECTION

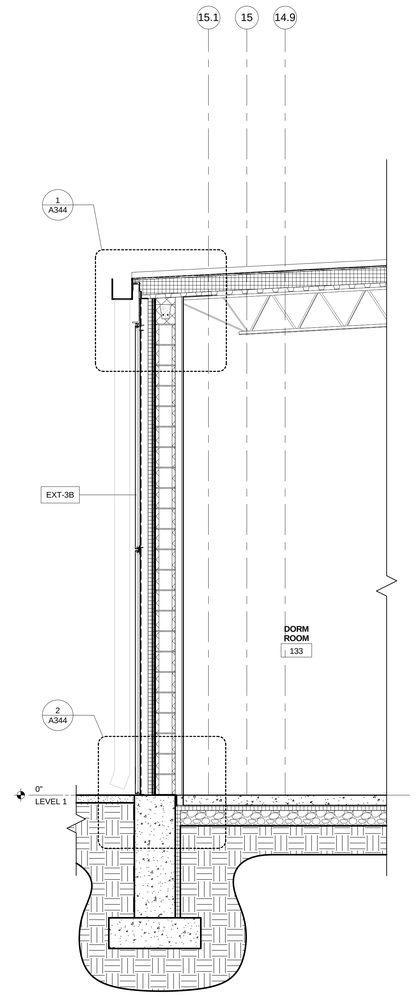

4 WALL SECTION

OPN ARCHITECTS

301 N BROOM STREET #100
MADISON, WI 53703
608-819-0260 PHONE
www.opnarchitects.com
opn@opnarchitects.com

All reports, plans, specifications, computer files, field data, notes and other documents and instruments prepared by OPN Architects, Inc. as instruments of service shall remain the property of OPN Architects, Inc. OPN Architects, Inc. shall retain all common law, statutory and other reserved rights, including the copyright thereto.

© 2017 OPN Architects, Inc.

Owner

City of Madison Fire Department

314 W. Dayton St.
Madison, WI 53703

Project

Madison Fire Station 14

3201 Dairy Drive
Madison, WI 53718

Civil Engineer

Snyder & Associates, Inc

5010 Voges Rd
Madison WI, 53718
P. 608-838-0444

Structural Engineer

IMEG

1800 Deming Way #200
Middleton, WI 53562
P. 608-223-0444

Mechanical Engineer

IMEG

1800 Deming Way #200
Middleton, WI 53562
P. 608-223-0444

Electrical Engineer

IMEG

1800 Deming Way #200
Middleton, WI 53562
P. 608-223-0444

Key Plan

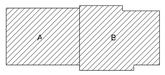

Sheet Issue Date

BID DOCUMENTS	11/03/17

Revision | Date

BID DOCUMENTS

Drawing

WALL SECTIONS

City of Madison Contract No. **8027**
OPN Project No. **17207000**

A314

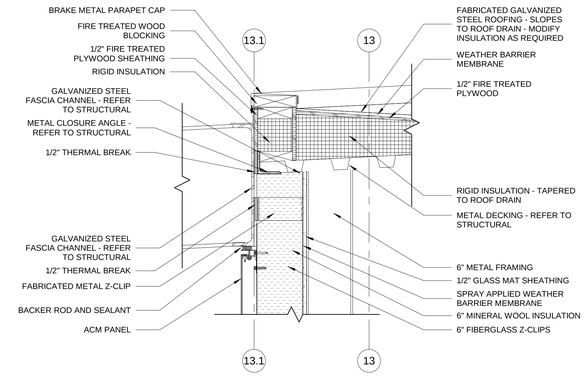

1 SECTION DETAIL
1 1/2" = 1'-0"

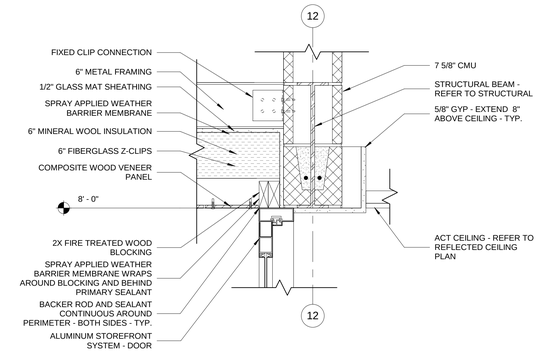

2 SECTION DETAIL
1 1/2" = 1'-0"

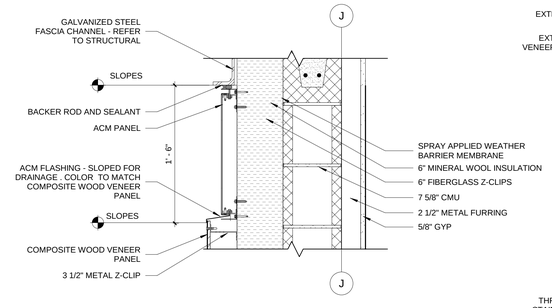

3 SECTION DETAIL
1 1/2" = 1'-0"

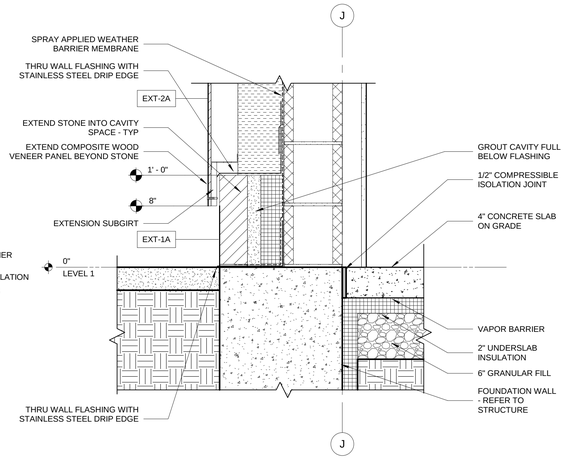

4 SECTION DETAIL
1 1/2" = 1'-0"

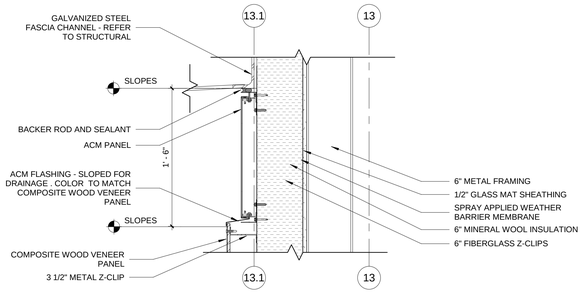

5 SECTION DETAIL
1 1/2" = 1'-0"

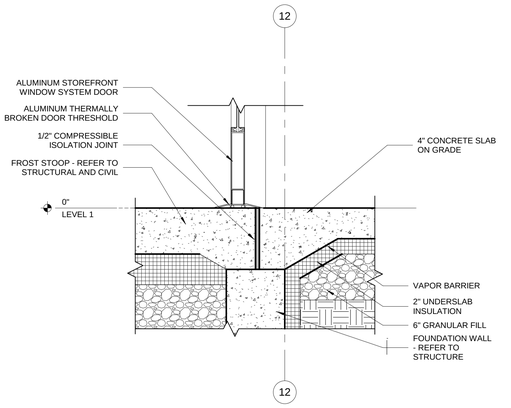

6 SECTION DETAIL
1 1/2" = 1'-0"

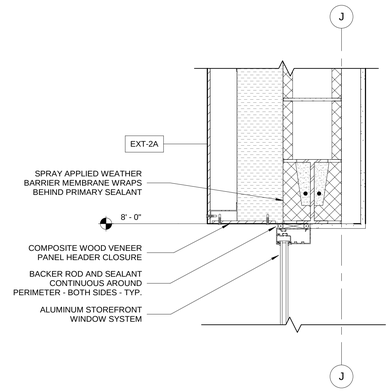

7 SECTION DETAIL
1 1/2" = 1'-0"

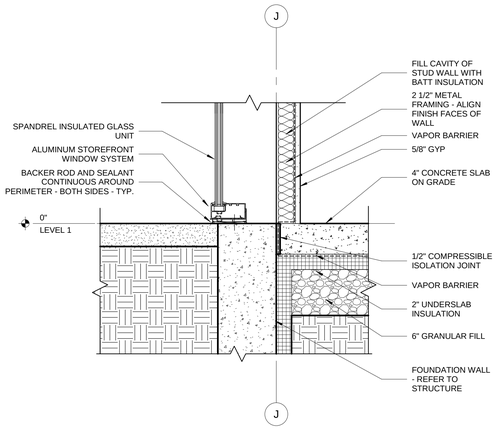

8 SECTION DETAIL
1 1/2" = 1'-0"

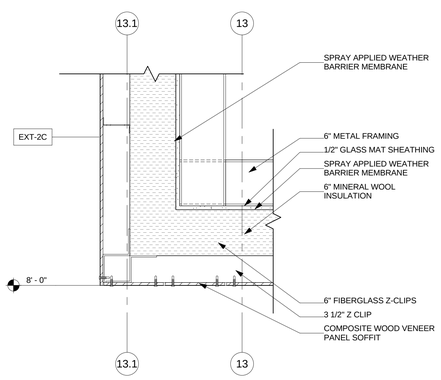

9 SECTION DETAIL
1 1/2" = 1'-0"

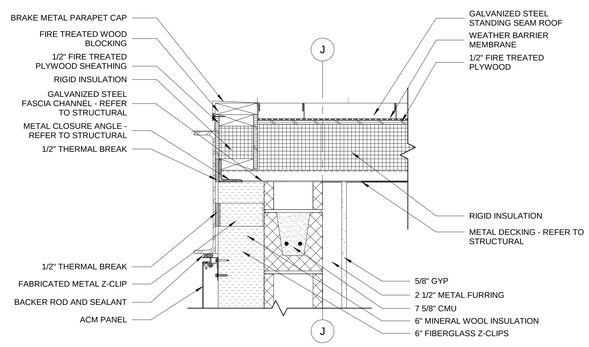

10 SECTION DETAIL
1 1/2" = 1'-0"

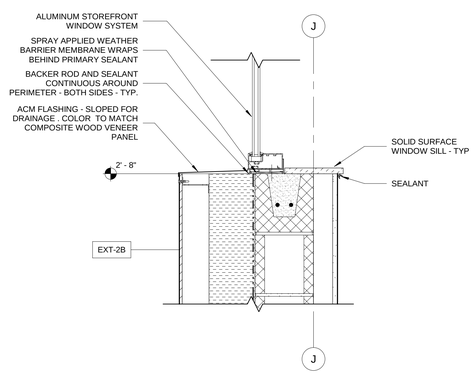

11 SECTION DETAIL
1 1/2" = 1'-0"

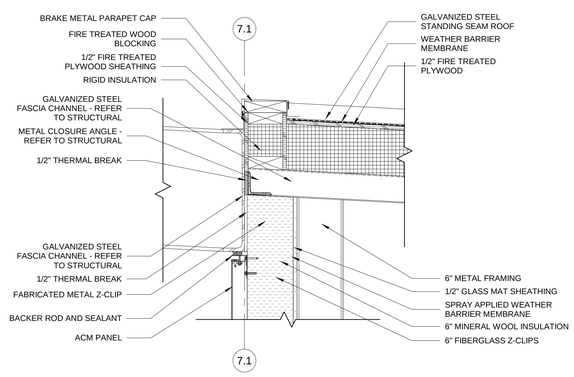

12 SECTION DETAIL
1 1/2" = 1'-0"

OPN ARCHITECTS
301 N BROOM STREET #100
MADISON, WI 53703
608-819-0260 PHONE
www.opnarchitects.com
opn@opnarchitects.com

All reports, plans, specifications, computer files, field data, notes and other documents and instruments prepared by OPN Architects, Inc. as instruments of service shall remain the property of OPN Architects, Inc. OPN Architects, Inc. shall retain all common law, statutory and other reserved rights, including the copyright thereto.

© 2017 OPN Architects, Inc.

Owner
City of Madison Fire Department
314 W. Dayton St.
Madison, WI 53703

Project
Madison Fire Station 14
3201 Dairy Drive
Madison, WI 53718

Civil Engineer
Snyder & Associates, Inc
5010 Voges Rd
Madison WI, 53718
P. 608-838-0444

Structural Engineer
IMEG
1800 Deming Way #200
Middleton, WI 53562
P. 608-223-0444

Mechanical Engineer
IMEG
1800 Deming Way #200
Middleton, WI 53562
P. 608-223-0444

Electrical Engineer
IMEG
1800 Deming Way #200
Middleton, WI 53562
P. 608-223-0444

Key Plan

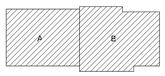

Sheet Issue Date	
BID DOCUMENTS	11/03/17

Revision	Date

BID DOCUMENTS

Drawing
SECTION DETAILS

City of Madison Contract No. **8027**
OPN Project No. **17207000**

A341

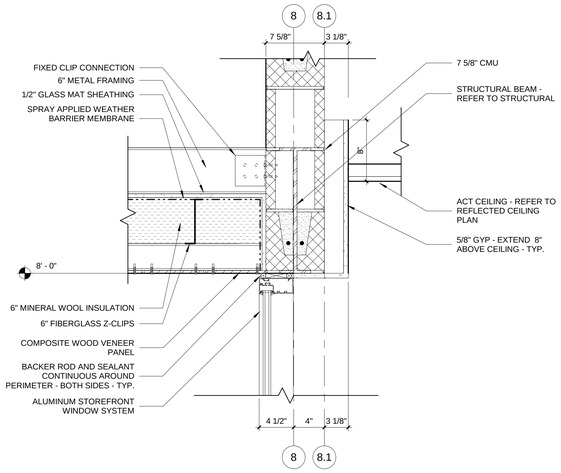

1 SECTION DETAIL
1 1/2" = 1'-0"

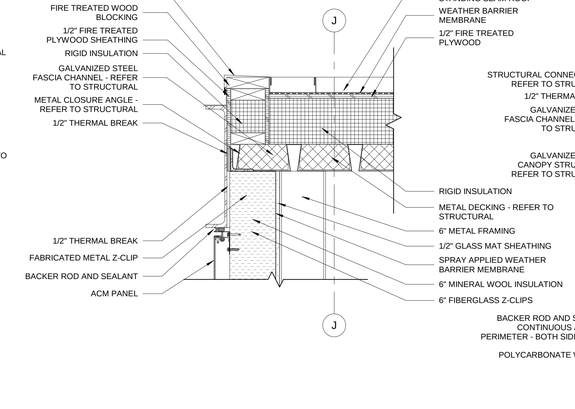

2 SECTION DETAIL
1 1/2" = 1'-0"

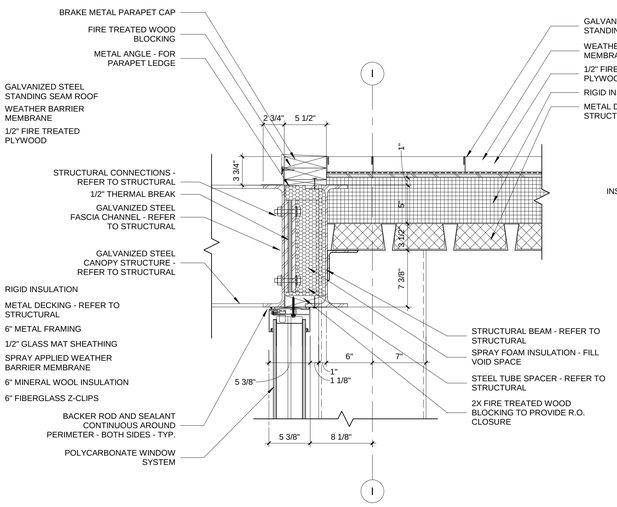

3 SECTION DETAIL
1 1/2" = 1'-0"

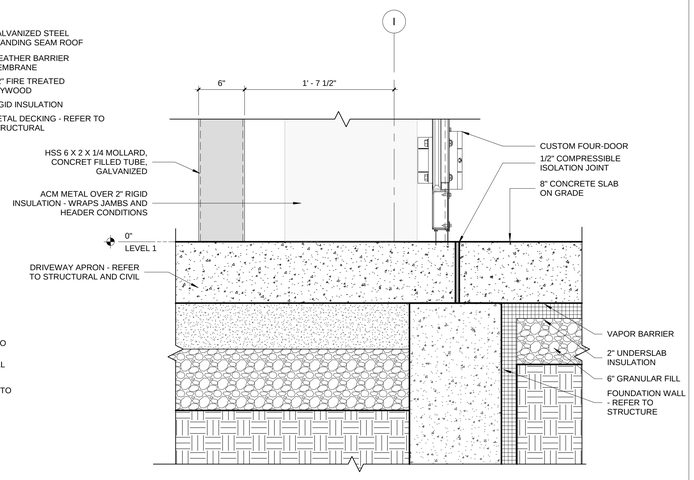

4 SECTION DETAIL
1 1/2" = 1'-0"

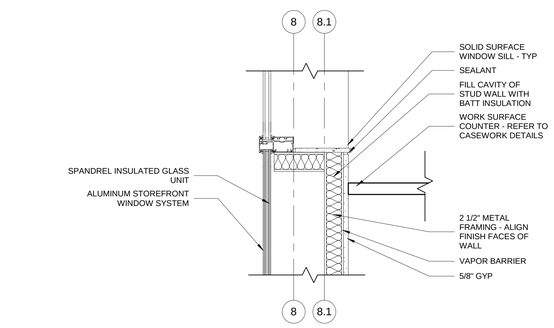

5 SECTION DETAIL
1 1/2" = 1'-0"

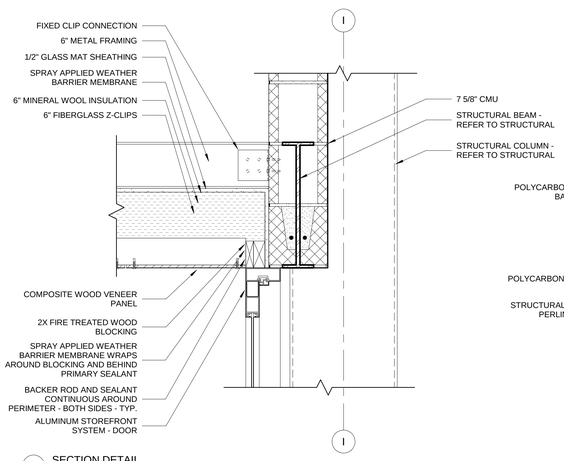

6 SECTION DETAIL
1 1/2" = 1'-0"

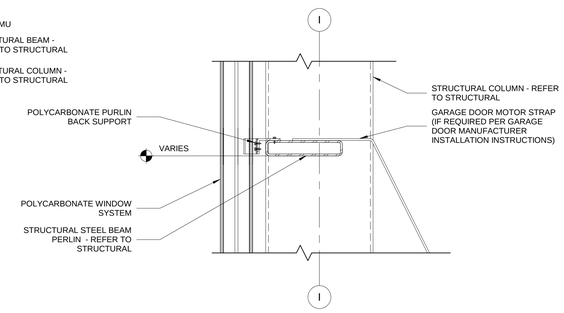

7 SECTION DETAIL
1 1/2" = 1'-0"

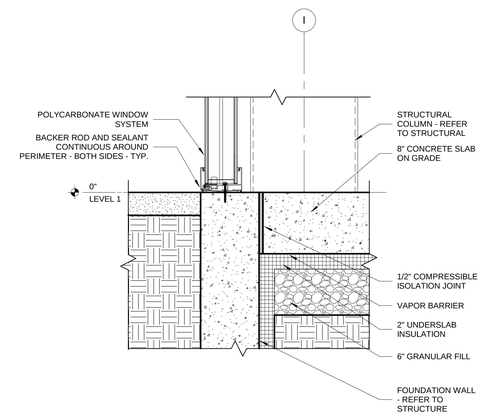

8 SECTION DETAIL
1 1/2" = 1'-0"

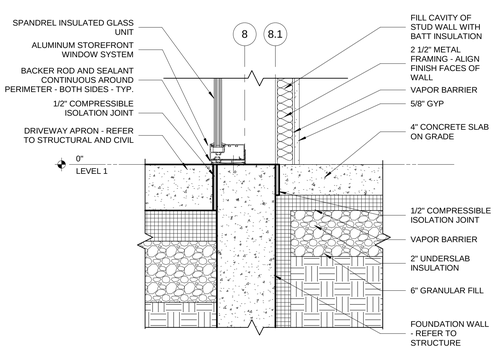

9 SECTION DETAIL
1 1/2" = 1'-0"

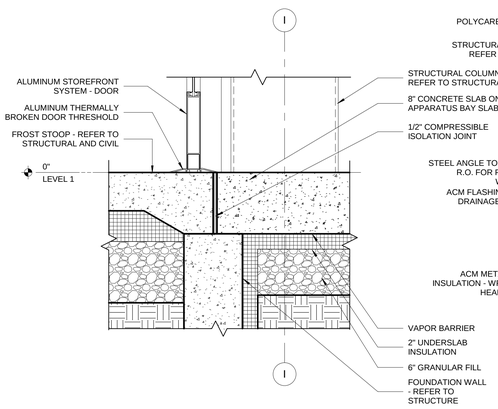

10 SECTION DETAIL
1 1/2" = 1'-0"

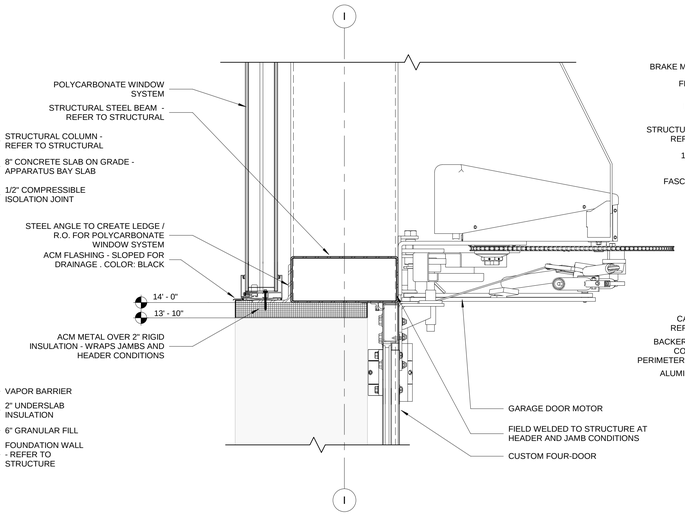

11 SECTION DETAIL
1 1/2" = 1'-0"

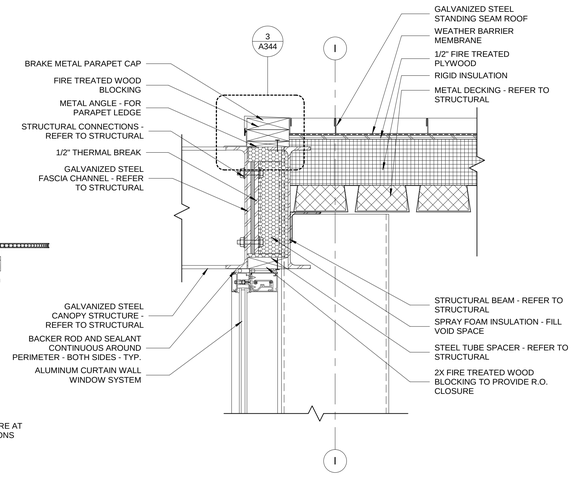

12 SECTION DETAIL
1 1/2" = 1'-0"

OPN ARCHITECTS
301 N BROOM STREET #100
MADISON, WI 53703
608-819-0260 PHONE
www.opnarchitects.com
opn@opnarchitects.com

All reports, plans, specifications, computer files, field data, notes and other documents and instruments prepared by OPN Architects, Inc. as instruments of service shall remain the property of OPN Architects, Inc. OPN Architects, Inc. shall retain all common law, statutory and other reserved rights, including the copyright thereto.

© 2017 OPN Architects, Inc.

Owner
City of Madison Fire Department
314 W. Dayton St.
Madison, WI 53703

Project
Madison Fire Station 14
3201 Dairy Drive
Madison, WI 53718

Civil Engineer
Snyder & Associates, Inc
5010 Voges Rd
Madison WI, 53718
P. 608-838-0444

Structural Engineer
IMEG
1800 Deming Way #200
Middleton, WI 53562
P. 608-223-0444

Mechanical Engineer
IMEG
1800 Deming Way #200
Middleton, WI 53562
P. 608-223-0444

Electrical Engineer
IMEG
1800 Deming Way #200
Middleton, WI 53562
P. 608-223-0444

Key Plan

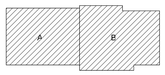

Sheet Issue Date	
BID DOCUMENTS	11/03/17

Revision	Date

BID DOCUMENTS

Drawing
SECTION DETAILS

City of Madison Contract No. **8027**
OPN Project No. **17207000**

A342

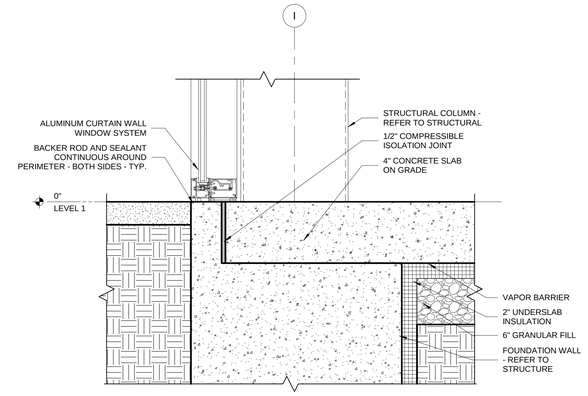

1 SECTION DETAIL
1 1/2" = 1'-0"

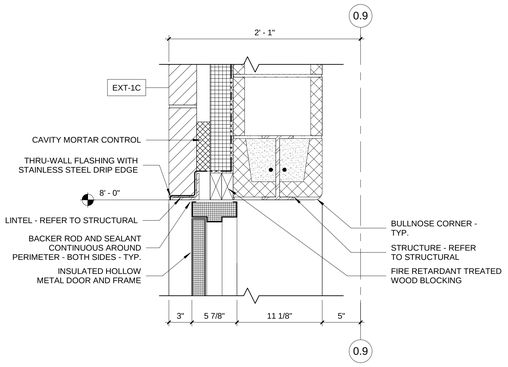

2 SECTION DETAIL
1 1/2" = 1'-0"

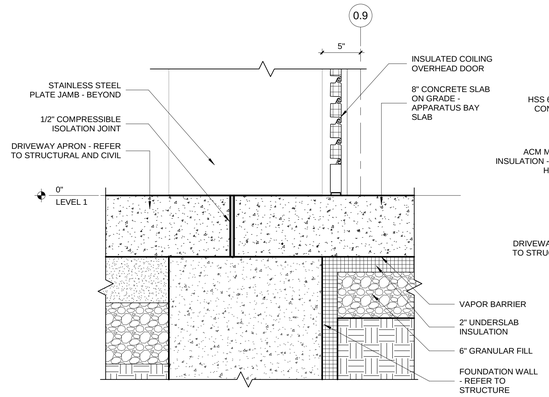

3 SECTION DETAIL
1 1/2" = 1'-0"

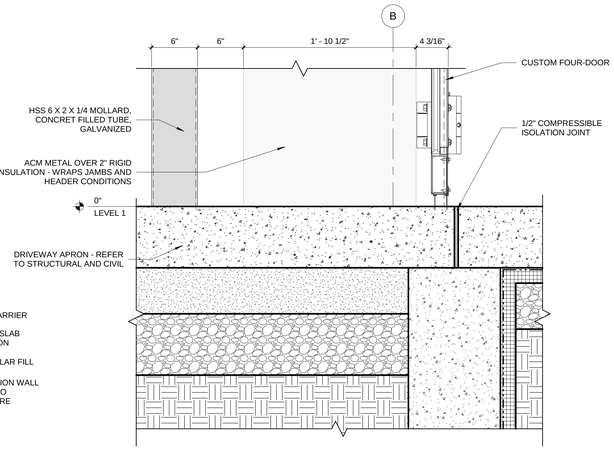

4 SECTION DETAIL
1 1/2" = 1'-0"

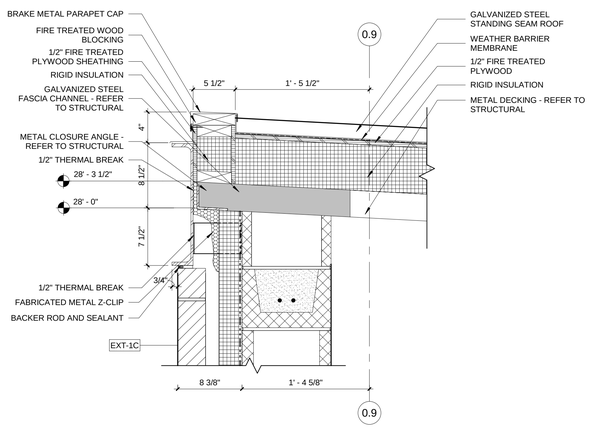

5 SECTION DETAIL
1 1/2" = 1'-0"

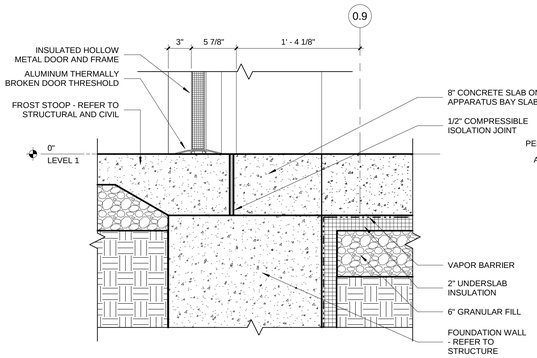

6 SECTION DETAIL
1 1/2" = 1'-0"

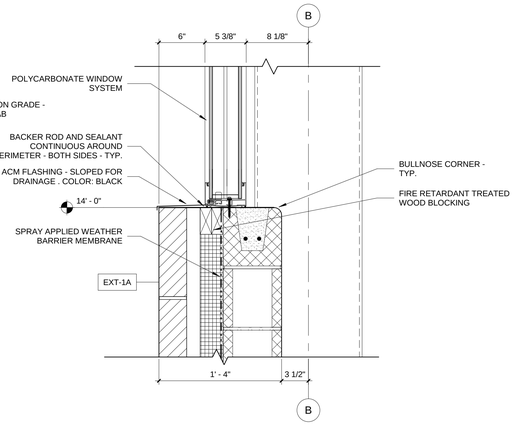

7 SECTION DETAIL
1 1/2" = 1'-0"

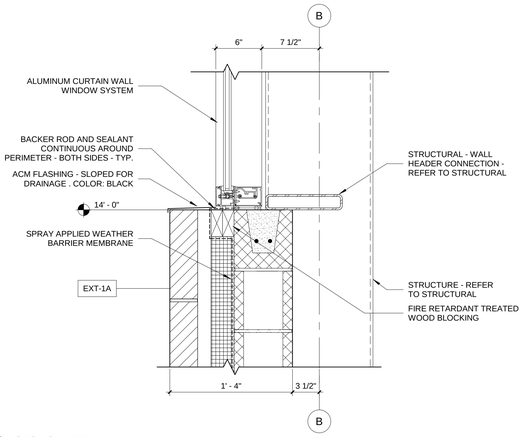

8 SECTION DETAIL
1 1/2" = 1'-0"

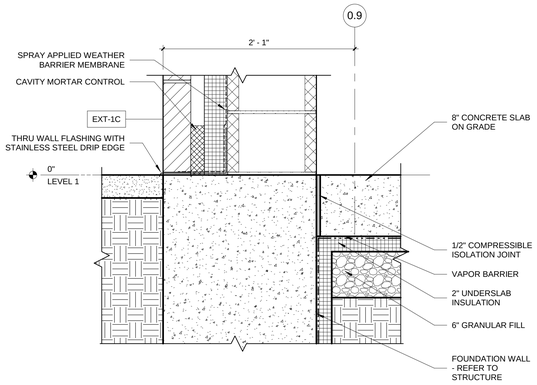

9 SECTION DETAIL
1 1/2" = 1'-0"

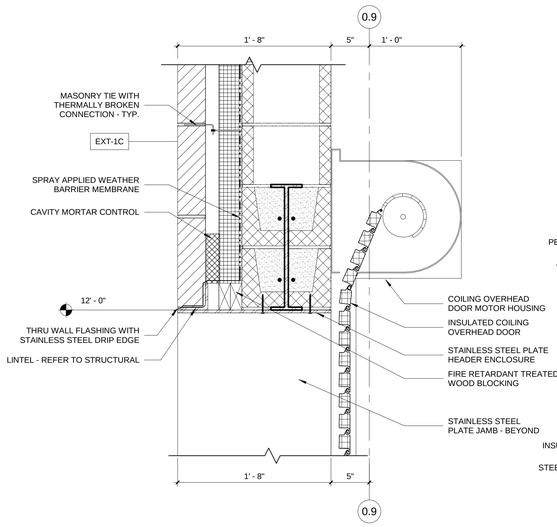

10 SECTION DETAIL
1 1/2" = 1'-0"

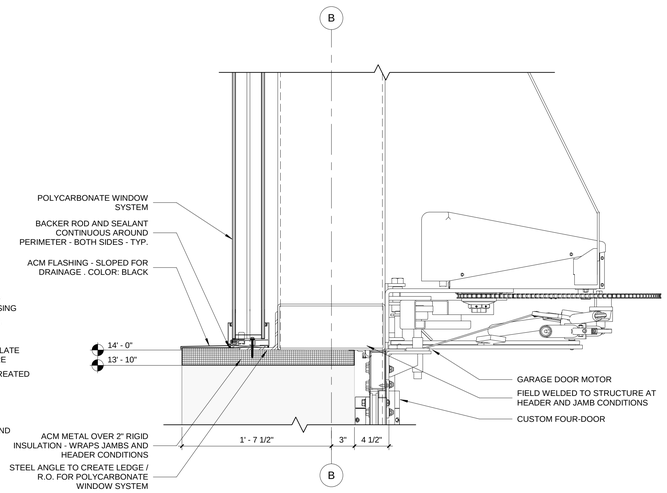

11 SECTION DETAIL
1 1/2" = 1'-0"

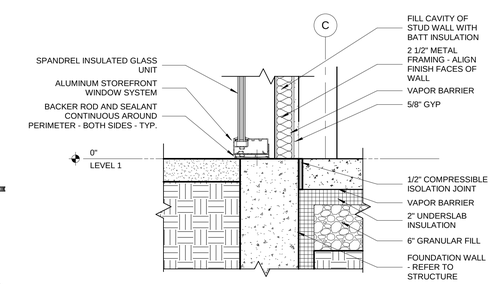

12 SECTION DETAIL
1 1/2" = 1'-0"

OPN ARCHITECTS
301 N BROOM STREET #100
MADISON, WI 53703
608-819-0260 PHONE
www.opnarchitects.com
opn@opnarchitects.com

All reports, plans, specifications, computer files, field data, notes and other documents and instruments prepared by OPN Architects, Inc. as instruments of service shall remain the property of OPN Architects, Inc. OPN Architects, Inc. shall retain all common law, statutory and other reserved rights, including the copyright thereto.

© 2017 OPN Architects, Inc.

Owner
City of Madison Fire Department
314 W. Dayton St.
Madison, WI 53703

Project
Madison Fire Station 14
3201 Dairy Drive
Madison, WI 53718

Civil Engineer
Snyder & Associates, Inc
5010 Voges Rd
Madison WI, 53718
P. 608-838-0444

Structural Engineer
IMEG
1800 Deming Way #200
Middleton, WI 53562
P. 608-223-0444

Mechanical Engineer
IMEG
1800 Deming Way #200
Middleton, WI 53562
P. 608-223-0444

Electrical Engineer
IMEG
1800 Deming Way #200
Middleton, WI 53562
P. 608-223-0444

Key Plan

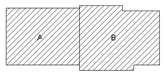

Sheet Issue Date	
BID DOCUMENTS	11/03/17

Revision	Date

BID DOCUMENTS

Drawing
SECTION DETAILS

City of Madison Contract No. **8027**
OPN Project No. **17207000**

A343

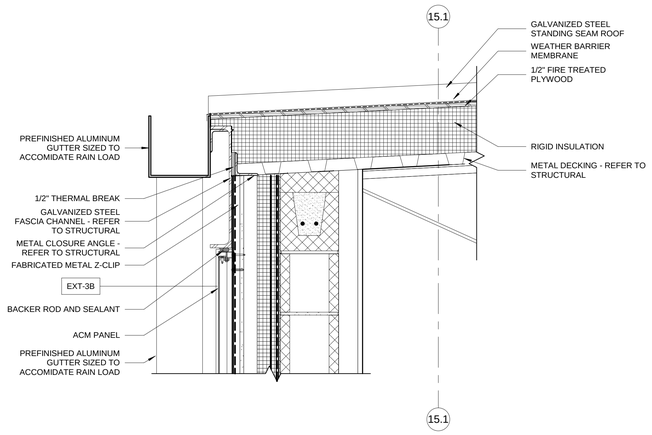

1 SECTION DETAIL
1 1/2" = 1'-0"

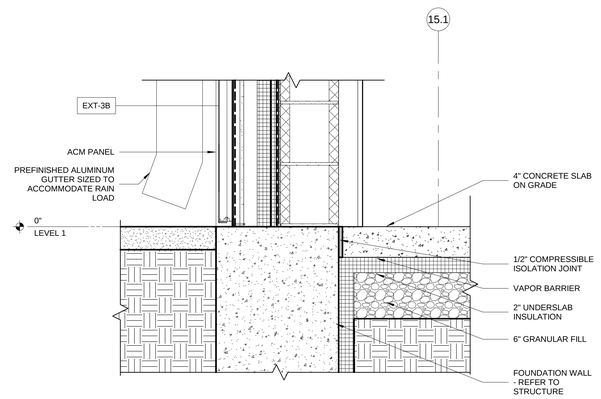

2 SECTION DETAIL
1 1/2" = 1'-0"

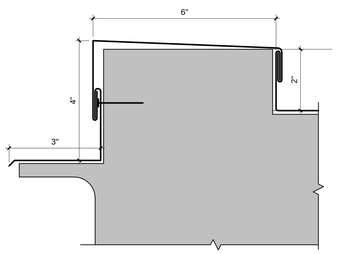

3 SECTION DETAIL - PARAPET CAP
6" = 1'-0"

OPN ARCHITECTS
301 N BROOM STREET #100
MADISON, WI 53703
608-819-0260 PHONE
www.opnarchitects.com
opn@opnarchitects.com

All reports, plans, specifications, computer files, field data, notes and other documents and instruments prepared by OPN Architects, Inc. as instruments of service shall remain the property of OPN Architects, Inc. OPN Architects, Inc. shall retain all common law, statutory and other reserved rights, including the copyright thereto.

© 2017 OPN Architects, Inc.

Owner
City of Madison Fire Department
314 W. Dayton St.
Madison, WI 53703

Project
Madison Fire Station 14
3201 Dairy Drive
Madison, WI 53718

Civil Engineer
Snyder & Associates, Inc
5010 Voges Rd
Madison WI, 53718
P. 608-838-0444

Structural Engineer
IMEG
1800 Deming Way #200
Middleton, WI 53562
P. 608-223-0444

Mechanical Engineer
IMEG
1800 Deming Way #200
Middleton, WI 53562
P. 608-223-0444

Electrical Engineer
IMEG
1800 Deming Way #200
Middleton, WI 53562
P. 608-223-0444

Key Plan

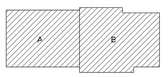

Sheet Issue Date
BID DOCUMENTS 11/03/17

Revision Date

BID DOCUMENTS

Drawing
SECTION DETAILS

City of Madison Contract No. **8027**
OPN Project No. **17207000**

A344

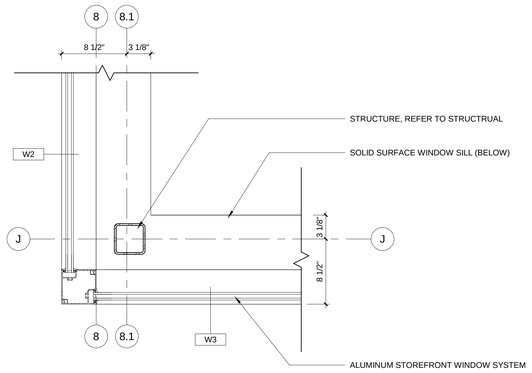

1 PLAN DETAIL
1 1/2" = 1'-0"

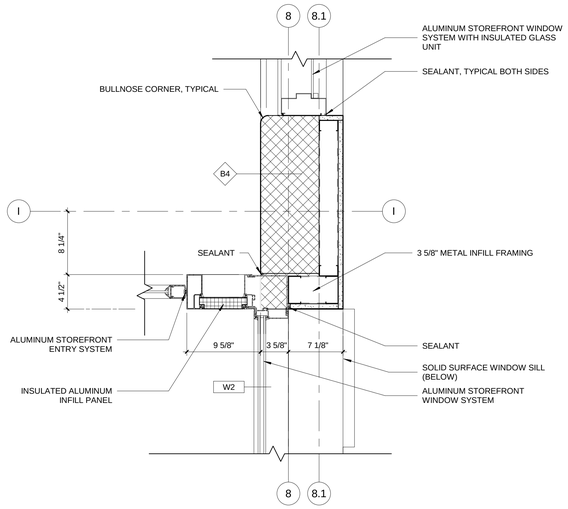

2 PLAN DETAIL
1 1/2" = 1'-0"

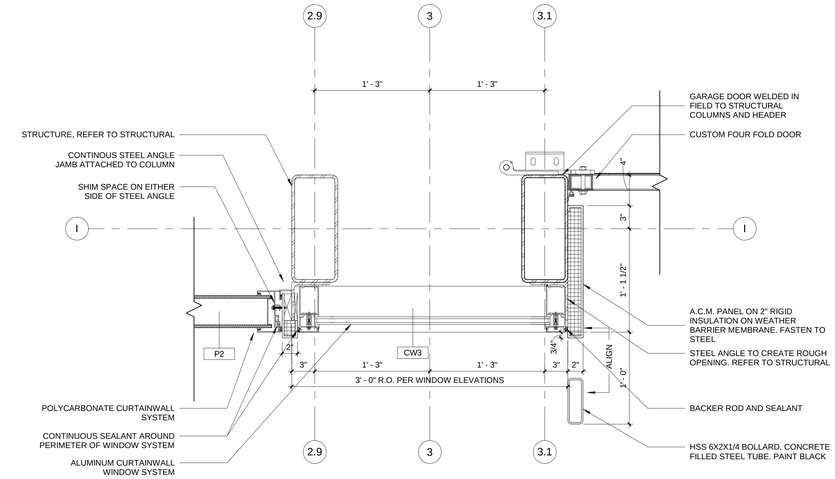

3 PLAN DETAIL
1 1/2" = 1'-0"

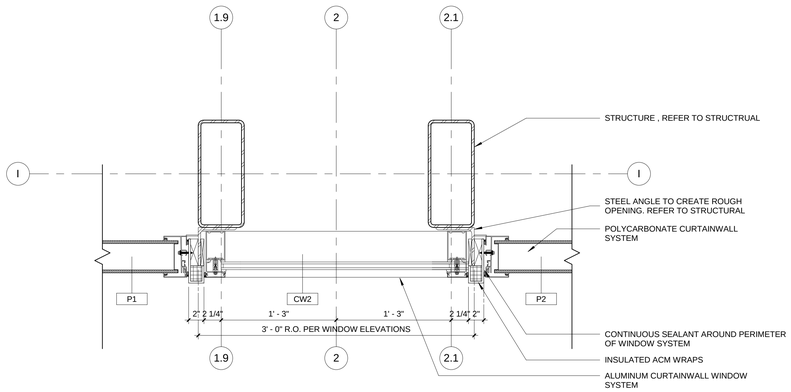

4 PLAN DETAIL
1 1/2" = 1'-0"

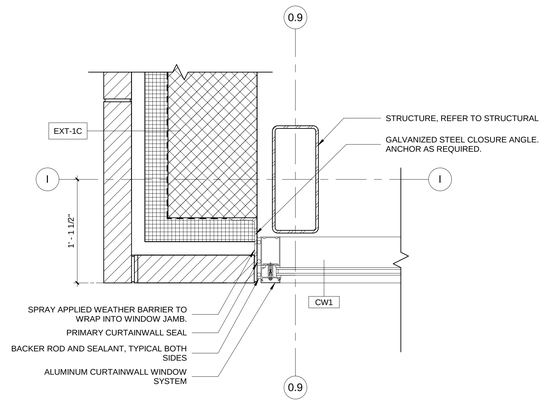

5 PLAN DETAIL
1 1/2" = 1'-0"

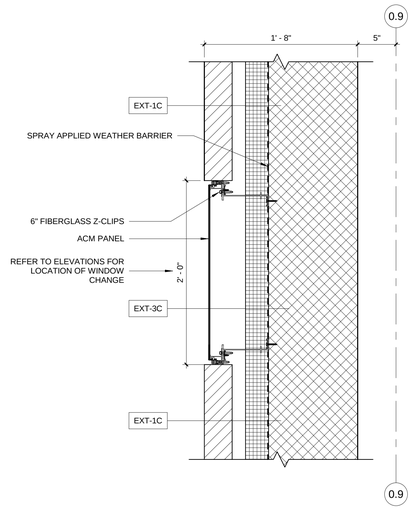

6 PLAN DETAIL
1 1/2" = 1'-0"

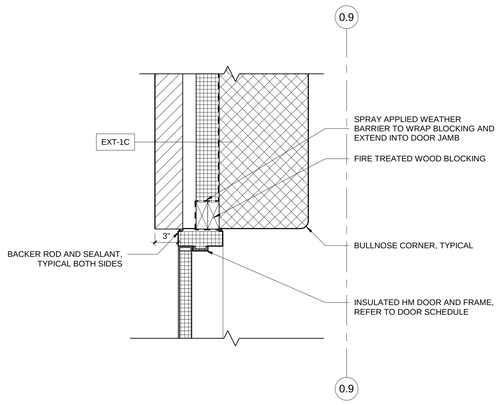

7 PLAN DETAIL
1 1/2" = 1'-0"

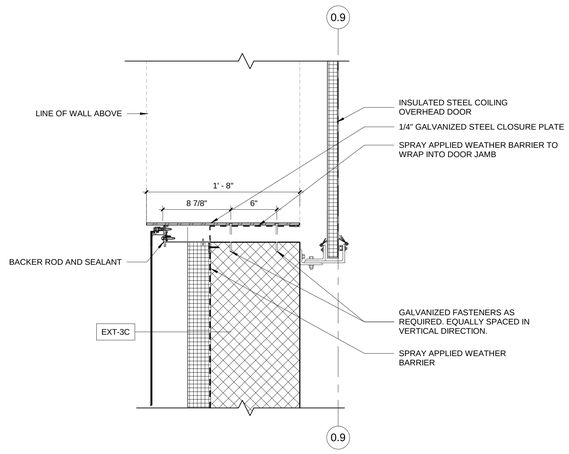

8 PLAN DETAIL
1 1/2" = 1'-0"

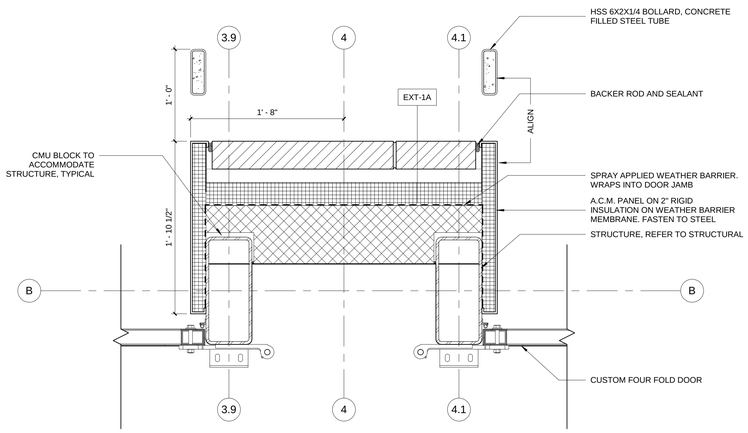

9 PLAN DETAIL
1 1/2" = 1'-0"

OPN ARCHITECTS

301 N BROOM STREET #100
MADISON, WI 53703
608-819-0260 PHONE
www.opnarchitects.com
opn@opnarchitects.com

All reports, plans, specifications, computer files, field data, notes and other documents and instruments prepared by OPN Architects, Inc. as instruments of service shall remain the property of OPN Architects, Inc. OPN Architects, Inc. shall retain all common law, statutory and other reserved rights, including the copyright thereto.

© 2017 OPN Architects, Inc.

Owner
City of Madison Fire Department
314 W. Dayton St.
Madison, WI 53703

Project
Madison Fire Station 14
3201 Dairy Drive
Madison, WI 53718

Civil Engineer
Snyder & Associates, Inc
5010 Voges Rd
Madison WI, 53718
P. 608-838-0444

Structural Engineer
IMEG
1800 Deming Way #200
Middleton, WI 53562
P. 608-223-0444

Mechanical Engineer
IMEG
1800 Deming Way #200
Middleton, WI 53562
P. 608-223-0444

Electrical Engineer
IMEG
1800 Deming Way #200
Middleton, WI 53562
P. 608-223-0444

Key Plan

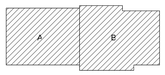

Sheet Issue Date	
BID DOCUMENTS	11/03/17

Revision	Date

BID DOCUMENTS

Drawing
PLAN DETAILS

City of Madison Contract No. **8027**
OPN Project No. **17207000**

A371

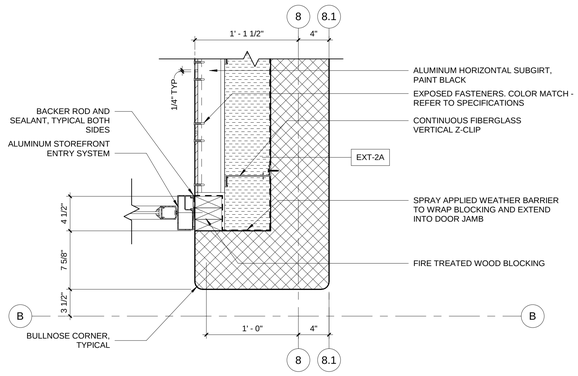

1 PLAN DETAIL
1 1/2" = 1'-0"

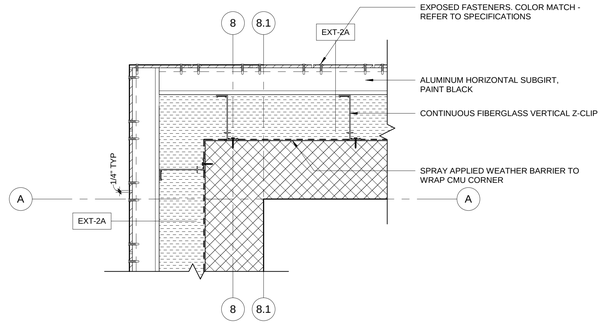

2 PLAN DETAIL
1 1/2" = 1'-0"

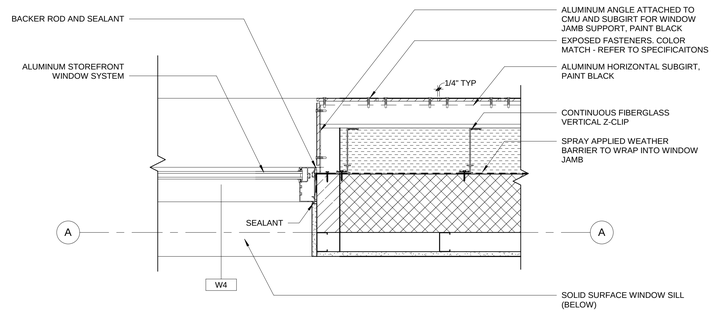

3 PLAN DETAIL
1 1/2" = 1'-0"

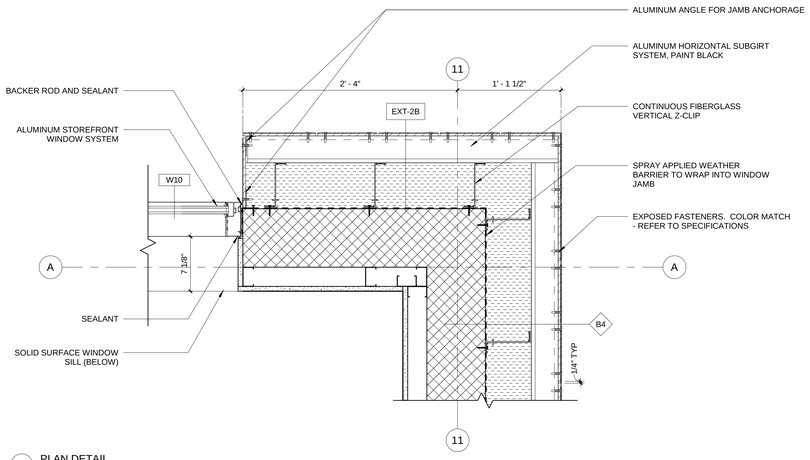

4 PLAN DETAIL
1 1/2" = 1'-0"

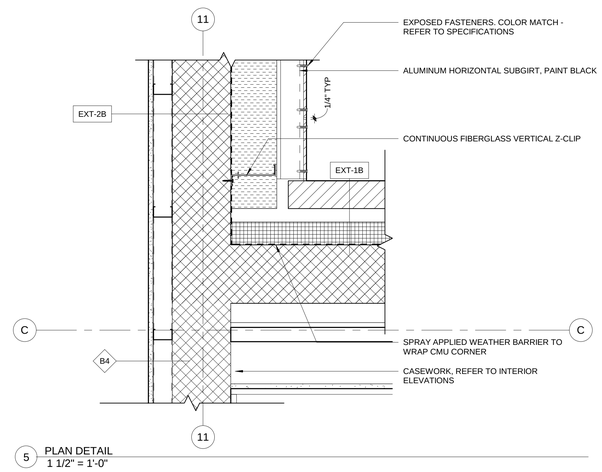

5 PLAN DETAIL
1 1/2" = 1'-0"

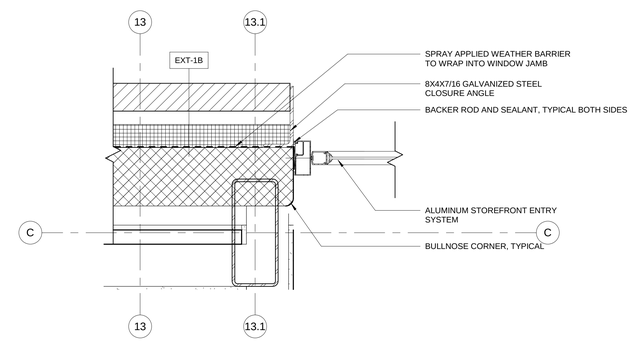

6 PLAN DETAIL
1 1/2" = 1'-0"

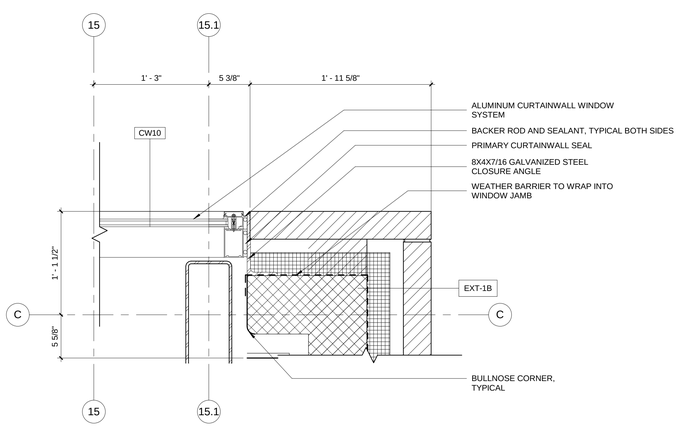

7 PLAN DETAIL
1 1/2" = 1'-0"

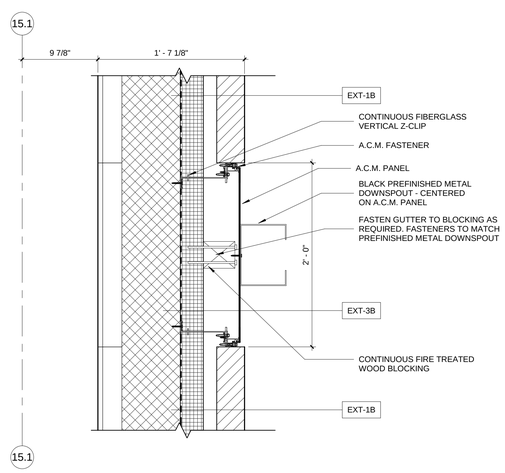

8 PLAN DETAIL
1 1/2" = 1'-0"

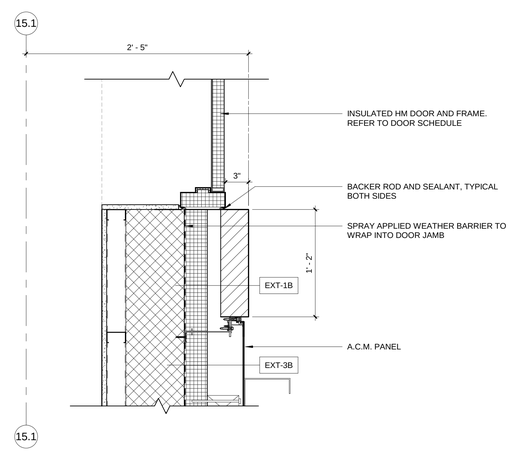

9 PLAN DETAIL
1 1/2" = 1'-0"

OPN ARCHITECTS

301 N BROOM STREET #100
MADISON, WI 53703
608-819-0260 PHONE
www.opnarchitects.com
opn@opnarchitects.com

All reports, plans, specifications, computer files, field data, notes and other documents and instruments prepared by OPN Architects, Inc. as instruments of service shall remain the property of OPN Architects, Inc. OPN Architects, Inc. shall retain all common law, statutory and other reserved rights, including the copyright thereto.

© 2017 OPN Architects, Inc.

Owner
City of Madison Fire Department
314 W. Dayton St.
Madison, WI 53703

Project
Madison Fire Station 14
3201 Dairy Drive
Madison, WI 53718

Civil Engineer
Snyder & Associates, Inc
5010 Voges Rd
Madison WI, 53718
P. 608-838-0444

Structural Engineer
IMEG
1800 Deming Way #200
Middleton, WI 53562
P. 608-223-0444

Mechanical Engineer
IMEG
1800 Deming Way #200
Middleton, WI 53562
P. 608-223-0444

Electrical Engineer
IMEG
1800 Deming Way #200
Middleton, WI 53562
P. 608-223-0444

Key Plan

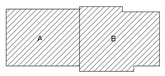

Sheet Issue Date	
BID DOCUMENTS	11/03/17

Revision	Date

BID DOCUMENTS

Drawing
PLAN DETAILS

City of Madison Contract No. **8027**
OPN Project No. **17207000**

A372

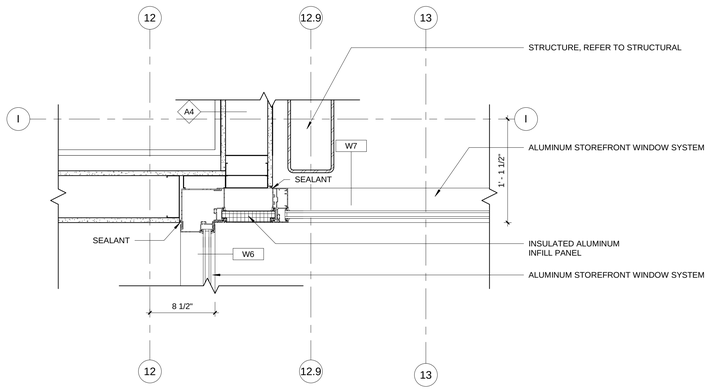

2 PLAN DETAIL
1 1/2" = 1'-0"

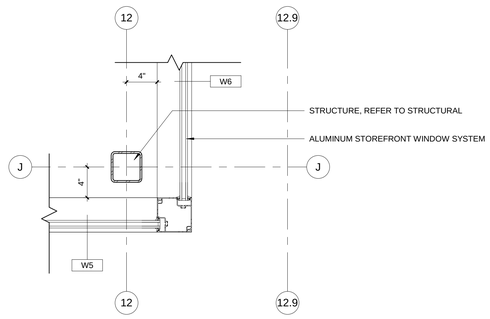

3 PLAN DETAIL
1 1/2" = 1'-0"

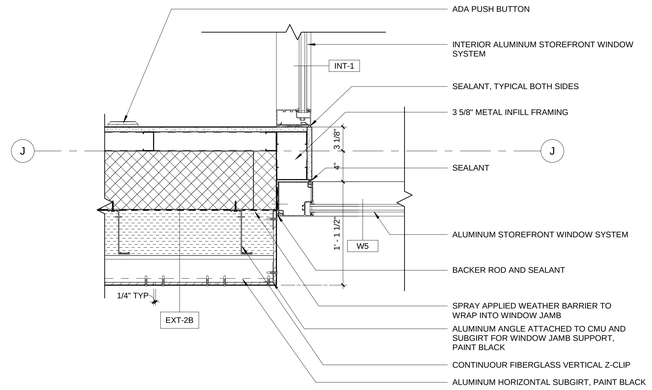

4 PLAN DETAIL
1 1/2" = 1'-0"

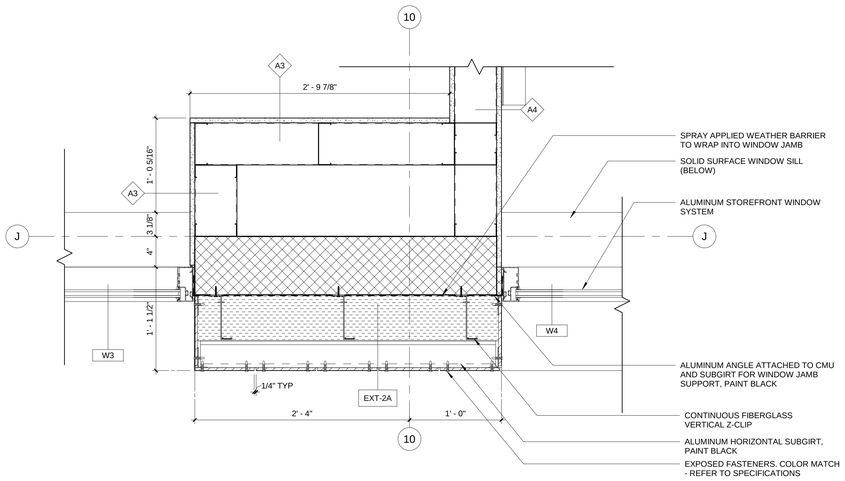

5 PLAN DETAIL
1 1/2" = 1'-0"

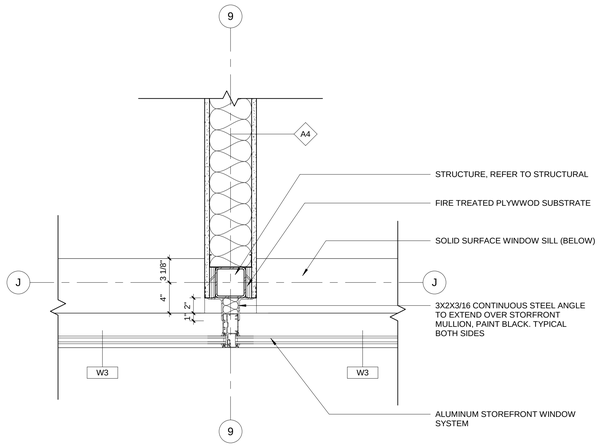

6 PLAN DETAIL
1 1/2" = 1'-0"

OPN ARCHITECTS

301 N BROOM STREET #100
MADISON, WI 53703
608-819-0260 PHONE
www.opnarchitects.com
opn@opnarchitects.com

All reports, plans, specifications, computer files, field data, notes and other documents and instruments prepared by OPN Architects, Inc. as instruments of service shall remain the property of OPN Architects, Inc. OPN Architects, Inc. shall retain all common law, statutory and other reserved rights, including the copyright thereto.

© 2017 OPN Architects, Inc.

Owner
City of Madison Fire Department
314 W. Dayton St.
Madison, WI 53703

Project
Madison Fire Station 14
3201 Dairy Drive
Madison, WI 53718

Civil Engineer
Snyder & Associates, Inc
5010 Voges Rd
Madison WI, 53718
P. 608-838-0444

Structural Engineer
IMEG
1800 Deming Way #200
Middleton, WI 53562
P. 608-223-0444

Mechanical Engineer
IMEG
1800 Deming Way #200
Middleton, WI 53562
P. 608-223-0444

Electrical Engineer
IMEG
1800 Deming Way #200
Middleton, WI 53562
P. 608-223-0444

Key Plan

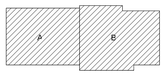

Sheet Issue Date
BID DOCUMENTS 11/03/17

Revision Date

BID DOCUMENTS

Drawing
PLAN DETAILS

City of Madison Contract No. **8027**
OPN Project No. **17207000**

A373

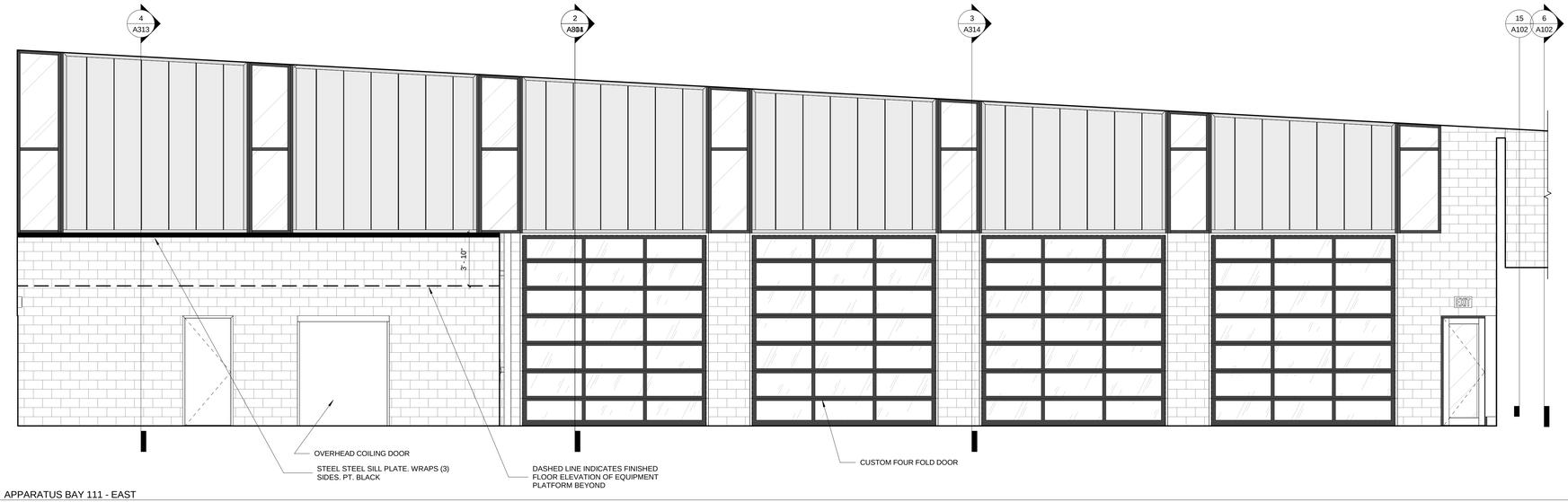

1 APPARATUS BAY 111 - EAST
1/4" = 1'-0"

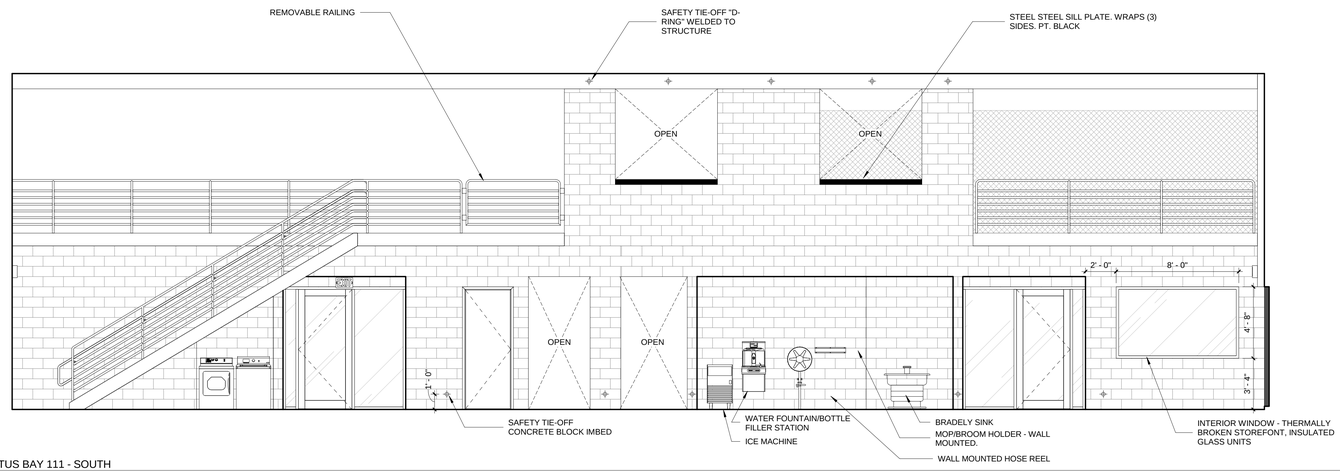

2 APPARATUS BAY 111 - SOUTH
1/4" = 1'-0"

OPN ARCHITECTS

301 N BROOM STREET #100
MADISON, WI 53703
608-819-0260 PHONE
www.opnarchitects.com
opn@opnarchitects.com

All reports, plans, specifications, computer files, field data, notes and other documents and instruments prepared by OPN Architects, Inc. as instruments of service shall remain the property of OPN Architects, Inc. OPN Architects, Inc. shall retain all common law, statutory and other reserved rights, including the copyright thereto.

© 2017 OPN Architects, Inc.

Owner

City of Madison Fire Department

314 W. Dayton St.
Madison, WI 53703

Project

Madison Fire Station 14

3201 Dairy Drive
Madison, WI 53718

Civil Engineer

Snyder & Associates, Inc

5010 Voges Rd
Madison WI, 53718
P. 608-838-0444

Structural Engineer

IMEG

1800 Deming Way #200
Middleton, WI 53562
P. 608-223-0444

Mechanical Engineer

IMEG

1800 Deming Way #200
Middleton, WI 53562
P. 608-223-0444

Electrical Engineer

IMEG

1800 Deming Way #200
Middleton, WI 53562
P. 608-223-0444

Key Plan

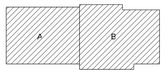

Sheet Issue Date

BID DOCUMENTS 11/03/17

Revision Date

BID DOCUMENTS

Drawing

INTERIOR ELEVATIONS

City of Madison Contract No. **8027**
OPN Project No. **17207000**

A401

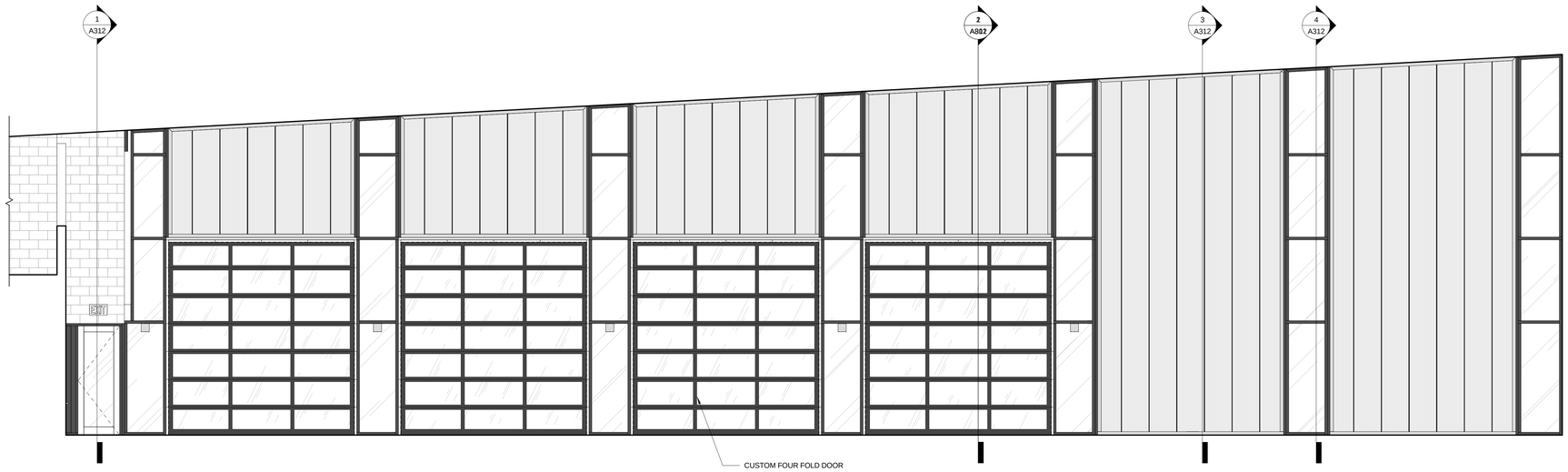

1 APPARATUS BAY 111 - WEST
1/4" = 1'-0"

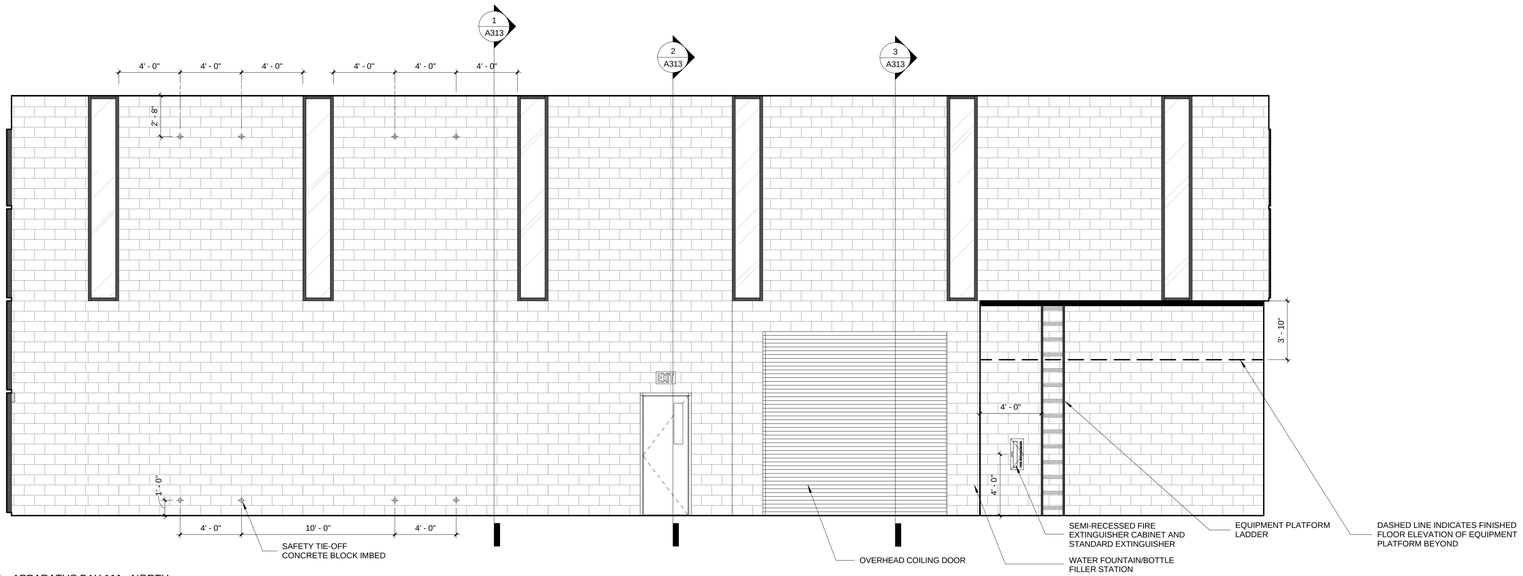

2 APPARATUS BAY 111 - NORTH
1/4" = 1'-0"

OPN ARCHITECTS

301 N BROOM STREET #100
MADISON, WI 53703
608-819-0260 PHONE
www.opnarchitects.com
opn@opnarchitects.com

All reports, plans, specifications, computer files, field data, notes and other documents and instruments prepared by OPN Architects, Inc. as instruments of service shall remain the property of OPN Architects, Inc. OPN Architects, Inc. shall retain all common law, statutory and other reserved rights, including the copyright thereto.

© 2017 OPN Architects, Inc.

Owner

City of Madison Fire Department

314 W. Dayton St.
Madison, WI 53703

Project

Madison Fire Station 14

3201 Dairy Drive
Madison, WI 53718

Civil Engineer

Snyder & Associates, Inc

5010 Voges Rd
Madison WI, 53718
P. 608-838-0444

Structural Engineer

IMEG

1800 Deming Way #200
Middleton, WI 53562
P. 608-223-0444

Mechanical Engineer

IMEG

1800 Deming Way #200
Middleton, WI 53562
P. 608-223-0444

Electrical Engineer

IMEG

1800 Deming Way #200
Middleton, WI 53562
P. 608-223-0444

Key Plan

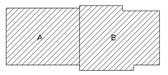

Sheet Issue Date

BID DOCUMENTS 11/03/17

Revision Date

BID DOCUMENTS

Drawing

INTERIOR ELEVATIONS

City of Madison Contract No. **8027**
OPN Project No. **17207000**

A402

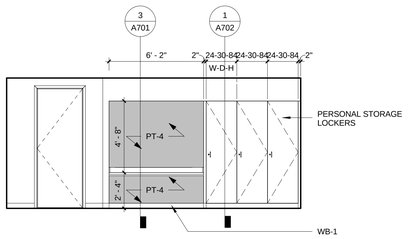

1 LT. QUARTERS 125 - SOUTH
1/4" = 1'-0"

2 JANITOR'S CLOSET 126 - EAST
1/4" = 1'-0"

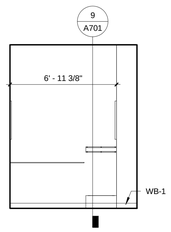

3 JANITOR'S CLOSET 126 - SOUTH
1/4" = 1'-0"

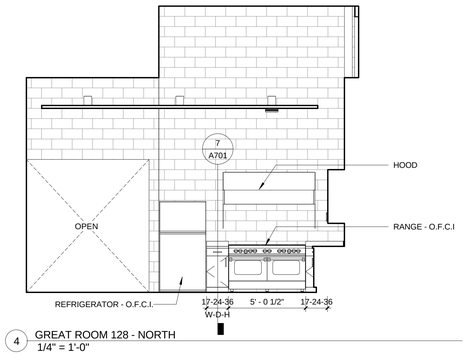

4 GREAT ROOM 128 - NORTH
1/4" = 1'-0"

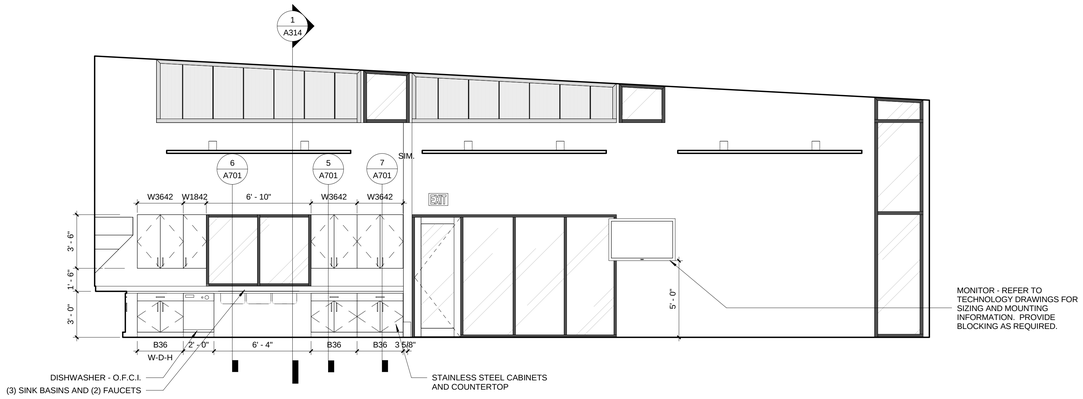

5 GREAT ROOM 128 - WEST
1/4" = 1'-0"

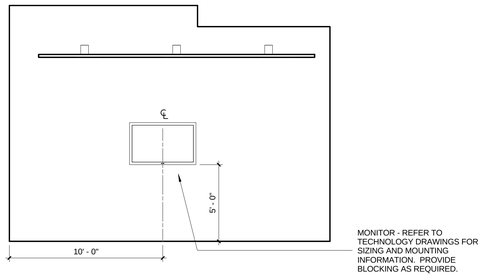

6 GREAT ROOM 128 - SOUTH
1/4" = 1'-0"

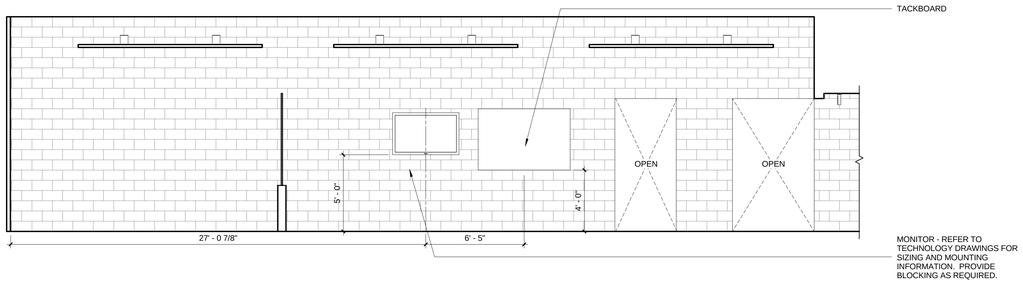

7 GREAT ROOM 128 - EAST
1/4" = 1'-0"

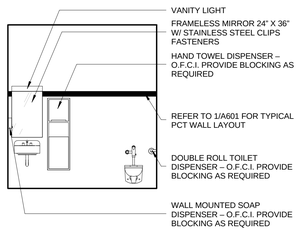

8 DIRTY 115 - EAST
1/4" = 1'-0"

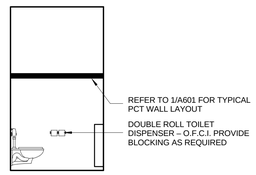

9 DIRTY 115 - SOUTH
1/4" = 1'-0"

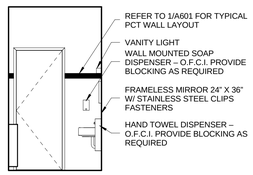

10 DIRTY 115 - NORTH
1/4" = 1'-0"

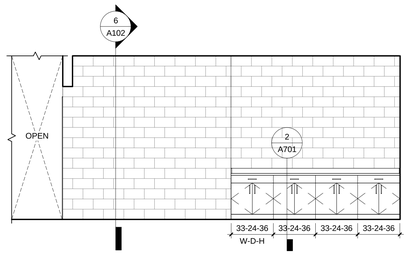

11 WORKSHOP / GENERAL STORAGE 116 - EAST
1/4" = 1'-0"

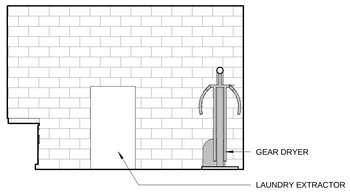

12 WORKSHOP / GENERAL STORAGE 116 - SOUTH
1/4" = 1'-0"

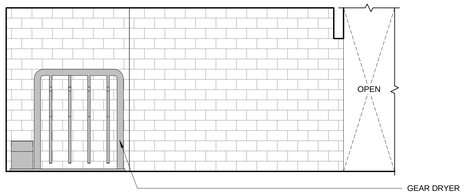

13 WORKSHOP / GENERAL STORAGE 116 - WEST
1/4" = 1'-0"

OPN ARCHITECTS

301 N BROOM STREET #100
MADISON, WI 53703
608-819-0260 PHONE
www.opnarchitects.com
opn@opnarchitects.com

All reports, plans, specifications, computer files, field data, notes and other documents and instruments prepared by OPN Architects, Inc. as instruments of service shall remain the property of OPN Architects, Inc. OPN Architects, Inc. shall retain all common law, statutory and other reserved rights, including the copyright thereto.

© 2017 OPN Architects, Inc.

Owner
City of Madison Fire Department
314 W. Dayton St.
Madison, WI 53703

Project
Madison Fire Station 14
3201 Dairy Drive
Madison, WI 53718

Civil Engineer
Snyder & Associates, Inc
5010 Voges Rd
Madison WI, 53718
P. 608-838-0444

Structural Engineer
IMEG
1800 Deming Way #200
Middleton, WI 53562
P. 608-223-0444

Mechanical Engineer
IMEG
1800 Deming Way #200
Middleton, WI 53562
P. 608-223-0444

Electrical Engineer
IMEG
1800 Deming Way #200
Middleton, WI 53562
P. 608-223-0444

Key Plan

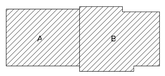

Sheet Issue Date	
BID DOCUMENTS	11/03/17
Revision	Date

BID DOCUMENTS

Drawing
INTERIOR ELEVATIONS

City of Madison Contract No. **8027**
OPN Project No. **17207000**

A403

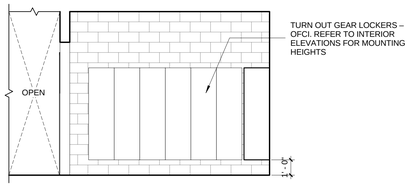

1 TURNOUT 117 - EAST
1/4" = 1'-0"

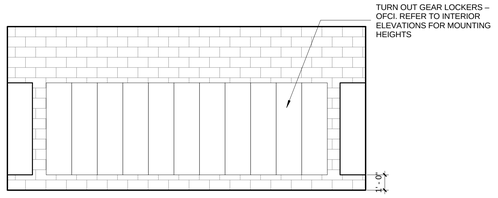

2 TURNOUT 117 - SOUTH
1/4" = 1'-0"

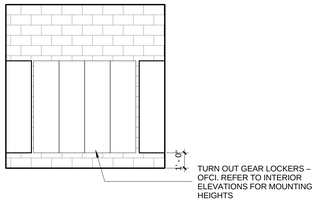

3 TURNOUT 117 - WEST
1/4" = 1'-0"

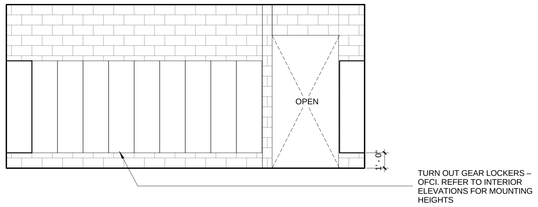

4 TURNOUT 117 - NORTH
1/4" = 1'-0"

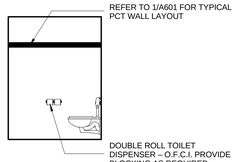

5 UNISEX 115 - EAST
1/4" = 1'-0"

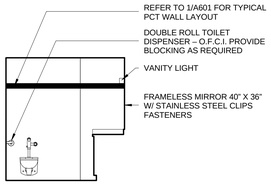

6 UNISEX 115 - SOUTH
1/4" = 1'-0"

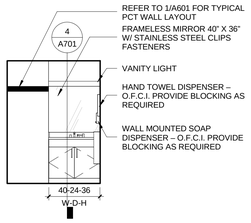

7 UNISEX 115 - WEST
1/4" = 1'-0"

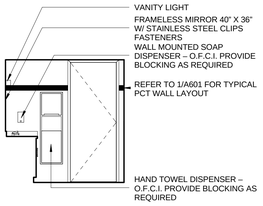

8 UNISEX 115 - NORTH
1/4" = 1'-0"

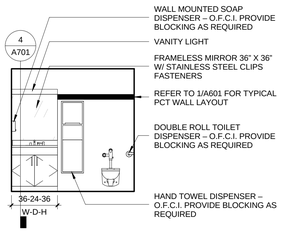

9 UNISEX 137 - EAST
1/4" = 1'-0"

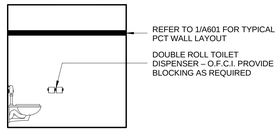

10 UNISEX 137 - SOUTH
1/4" = 1'-0"

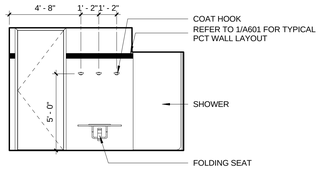

11 UNISEX 137 - WEST
1/4" = 1'-0"

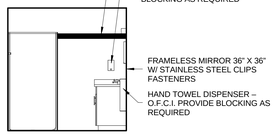

12 UNISEX 137 - NORTH
1/4" = 1'-0"

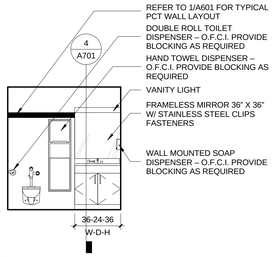

13 UNISEX 136 - EAST
1/4" = 1'-0"

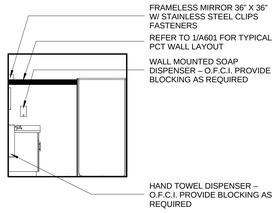

14 UNISEX 136 - SOUTH
1/4" = 1'-0"

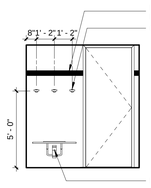

15 UNISEX 136 - WEST
1/4" = 1'-0"

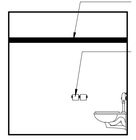

16 UNISEX 136 - NORTH
1/4" = 1'-0"

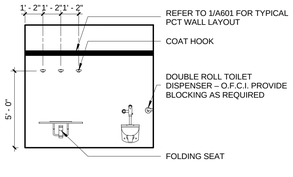

17 UNISEX 135 - EAST
1/4" = 1'-0"

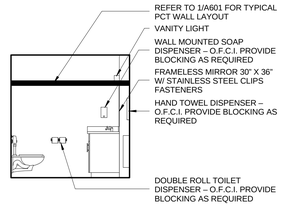

18 UNISEX 135 - SOUTH
1/4" = 1'-0"

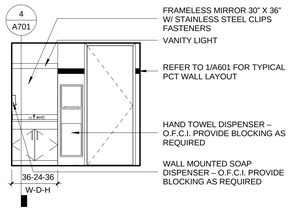

19 UNISEX 135 - WEST
1/4" = 1'-0"

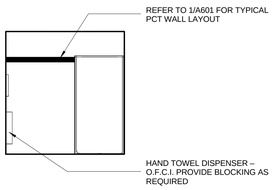

20 UNISEX 135 - NORTH
1/4" = 1'-0"

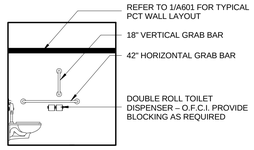

21 UNISEX (ADA) 107 - EAST
1/4" = 1'-0"

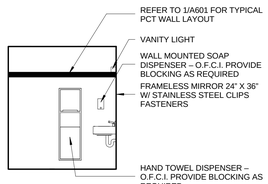

22 UNISEX (ADA) 107 - WEST
1/4" = 1'-0"

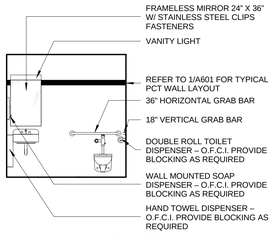

23 UNISEX (ADA) 107 - NORTH
1/4" = 1'-0"

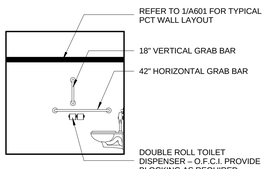

24 UNISEX (ADA) 106 - EAST
1/4" = 1'-0"

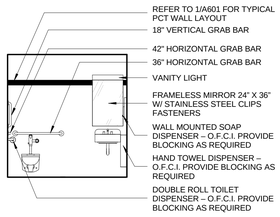

25 UNISEX (ADA) 106 - SOUTH
1/4" = 1'-0"

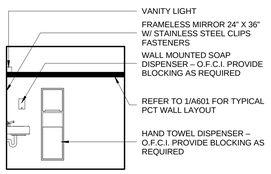

26 UNISEX (ADA) 106 - WEST
1/4" = 1'-0"

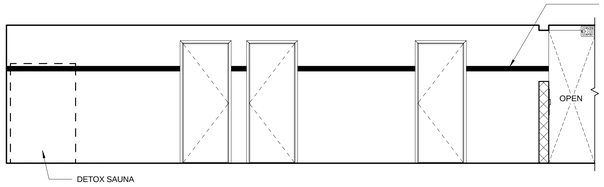

27 LOCKER ROOM 134 - EAST
1/4" = 1'-0"

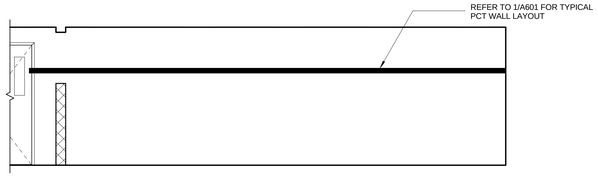

28 LOCKER ROOM 134 - WEST
1/4" = 1'-0"

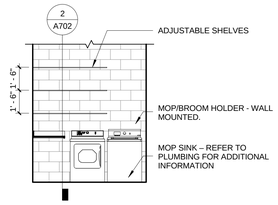

29 JANITOR'S CLOSET - EAST
1/4" = 1'-0"

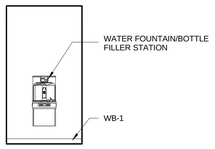

30 CORRIDOR - EAST
1/4" = 1'-0"

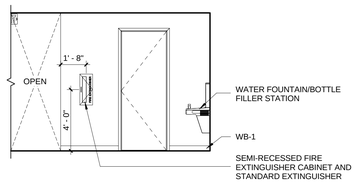

31 CORRIDOR - NORTH
1/4" = 1'-0"

OPN ARCHITECTS

301 N BROOM STREET #100
MADISON, WI 53703
608-819-0260 PHONE
www.opnarchitects.com
opn@opnarchitects.com

All reports, plans, specifications, computer files, field data, notes and other documents and instruments prepared by OPN Architects, Inc. as instruments of service shall remain the property of OPN Architects, Inc. OPN Architects, Inc. shall retain all common law, statutory and other reserved rights, including the copyright thereto.

© 2017 OPN Architects, Inc.

Owner
City of Madison Fire Department
314 W. Dayton St.
Madison, WI 53703

Project
Madison Fire Station 14
3201 Dairy Drive
Madison, WI 53718

Civil Engineer
Snyder & Associates, Inc
5010 Voges Rd
Madison WI, 53718
P. 608-838-0444

Structural Engineer
IMEG
1800 Deming Way #200
Middleton, WI 53562
P. 608-223-0444

Mechanical Engineer
IMEG
1800 Deming Way #200
Middleton, WI 53562
P. 608-223-0444

Electrical Engineer
IMEG
1800 Deming Way #200
Middleton, WI 53562
P. 608-223-0444

Key Plan

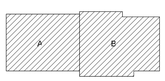

Sheet Issue Date
BID DOCUMENTS 11/03/17

Revision Date

BID DOCUMENTS

Drawing
INTERIOR ELEVATIONS

City of Madison Contract No. **8027**
OPN Project No. **17207000**

A404

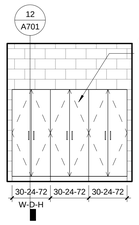

1 PANTRY 129 - SOUTH
1/4" = 1'-0"

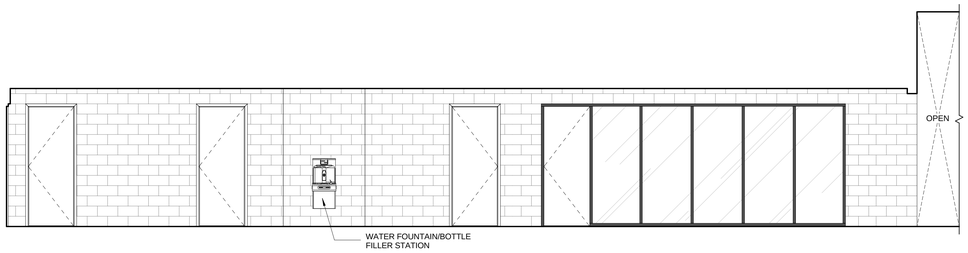

2 CORRIDOR 130 - EAST
1/4" = 1'-0"

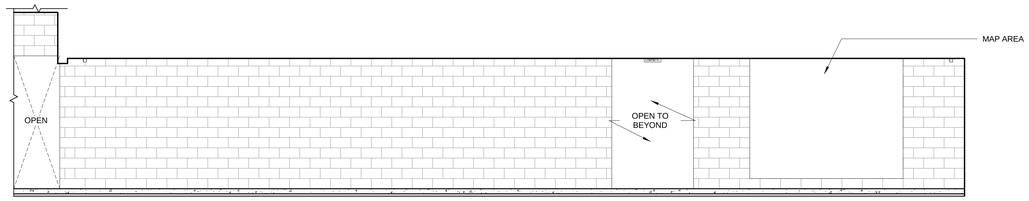

3 CORRIDOR 130 - SOUTH
1/4" = 1'-0"

4 CORRIDOR 130 - NORTH
1/4" = 1'-0"

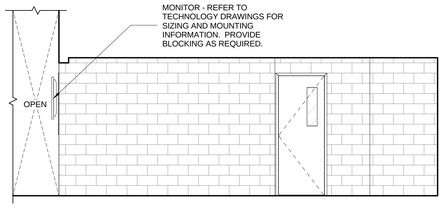

5 CORRIDOR 131 - SOUTH
1/4" = 1'-0"

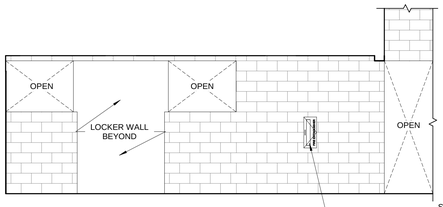

7 CORRIDOR 131 - NORTH
1/4" = 1'-0"

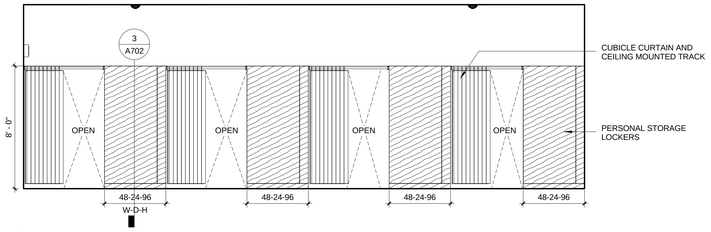

8 DORM ROOM 133 - EAST
1/4" = 1'-0"

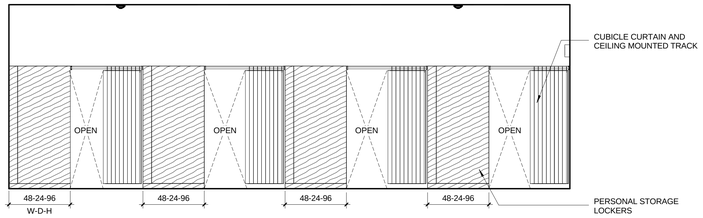

9 DORM ROOM 133 - WEST
1/4" = 1'-0"

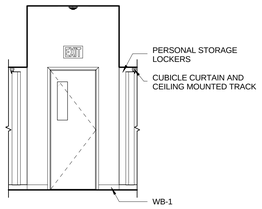

10 DORM ROOM 133 - NORTH
1/4" = 1'-0"

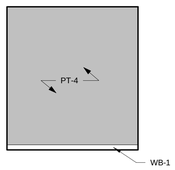

11 TYPICAL DORM ROOM 133 - EAST
1/4" = 1'-0"

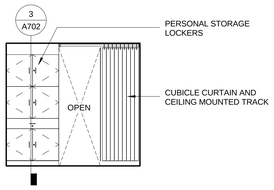

12 TYPICAL DORM ROOM 133 - WEST
1/4" = 1'-0"

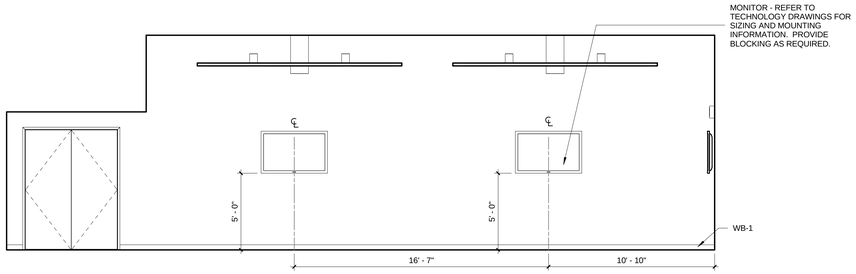

13 COMMUNITY/TRAINING ROOM 140 - EAST
1/4" = 1'-0"

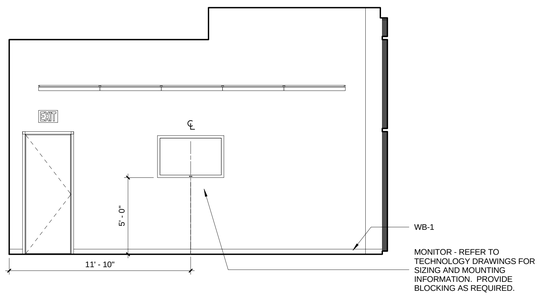

14 COMMUNITY/TRAINING ROOM 140 - SOUTH
1/4" = 1'-0"

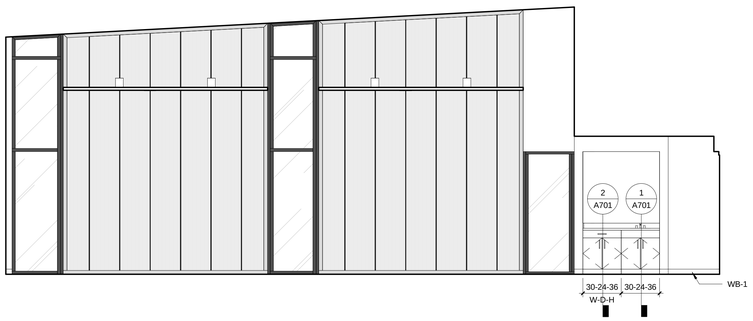

15 COMMUNITY/TRAINING ROOM 140 - WEST
1/4" = 1'-0"

OPN ARCHITECTS
301 N BROOM STREET #100
MADISON, WI 53703
608-819-0260 PHONE
www.opnarchitects.com
opn@opnarchitects.com

All reports, plans, specifications, computer files, field data, notes and other documents and instruments prepared by OPN Architects, Inc. as instruments of service shall remain the property of OPN Architects, Inc. OPN Architects, Inc. shall retain all common law, statutory and other reserved rights, including the copyright thereto.

© 2017 OPN Architects, Inc.

Owner
City of Madison Fire Department
314 W. Dayton St.
Madison, WI 53703

Project
Madison Fire Station 14
3201 Dairy Drive
Madison, WI 53718

Civil Engineer
Snyder & Associates, Inc
5010 Voges Rd
Madison WI, 53718
P. 608-838-0444

Structural Engineer
IMEG
1800 Deming Way #200
Middleton, WI 53562
P. 608-223-0444

Mechanical Engineer
IMEG
1800 Deming Way #200
Middleton, WI 53562
P. 608-223-0444

Electrical Engineer
IMEG
1800 Deming Way #200
Middleton, WI 53562
P. 608-223-0444

Key Plan

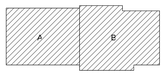

Sheet Issue Date
BID DOCUMENTS 11/03/17

Revision Date

BID DOCUMENTS

Drawing
INTERIOR ELEVATIONS

City of Madison Contract No. **8027**
OPN Project No. **17207000**

A405

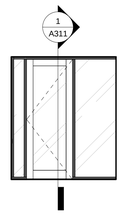

1 VESTIBULE 101 - SOUTH
1/4" = 1'-0"

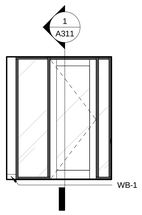

2 VESTIBULE 101 - NORTH
1/4" = 1'-0"

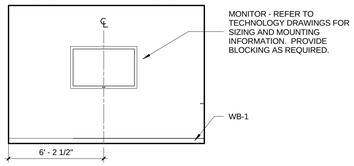

3 SMALL MEETING 103 - SOUTH
1/4" = 1'-0"

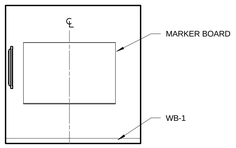

4 SMALL MEETING 103 - WEST
1/4" = 1'-0"

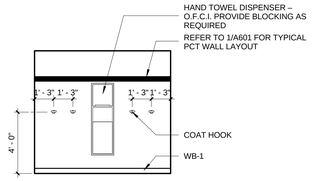

5 LT. SHOWER 124 - EAST
1/4" = 1'-0"

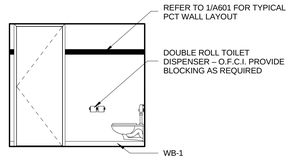

6 LT. SHOWER 124 - SOUTH
1/4" = 1'-0"

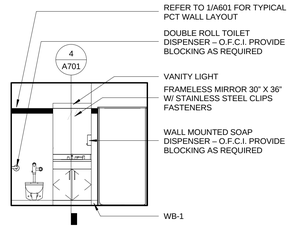

7 LT. SHOWER 124 - WEST
1/4" = 1'-0"

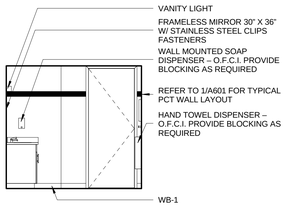

8 LT. SHOWER 124 - NORTH
1/4" = 1'-0"

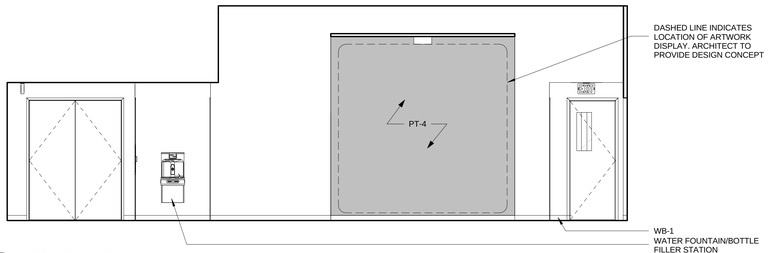

9 LOBBY 101 - EAST
1/4" = 1'-0"

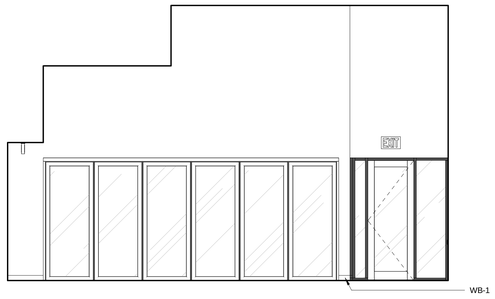

10 LOBBY 101 - SOUTH
1/4" = 1'-0"

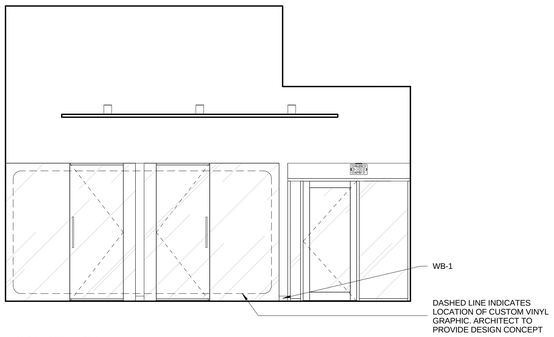

11 LOBBY 101 - NORTH
1/4" = 1'-0"

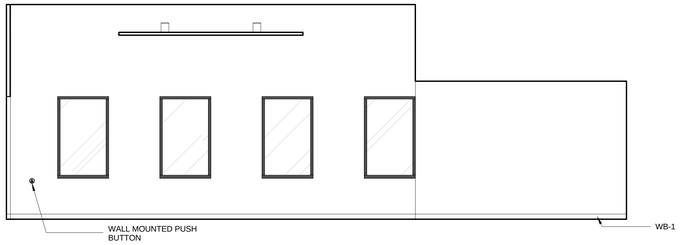

12 LOBBY 101 - WEST
1/4" = 1'-0"

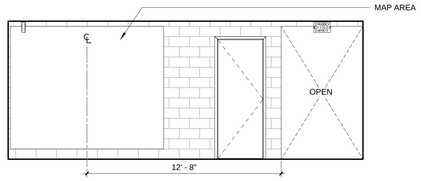

13 CORRIDOR 110 - EAST
1/4" = 1'-0"

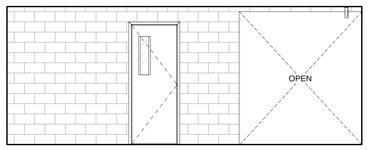

15 CORRIDOR 110 - WEST
1/4" = 1'-0"

16 CORRIDOR 110 - NORTH
1/4" = 1'-0"

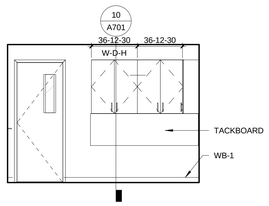

17 LIEUTENANT'S OFFICE 108 - EAST
1/4" = 1'-0"

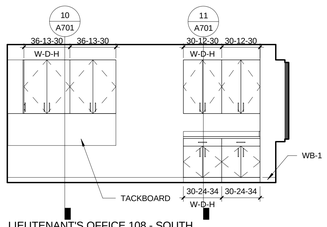

18 LIEUTENANT'S OFFICE 108 - SOUTH
1/4" = 1'-0"

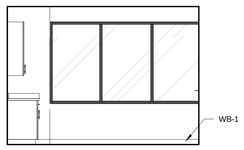

19 LIEUTENANT'S OFFICE 108 - WEST
1/4" = 1'-0"

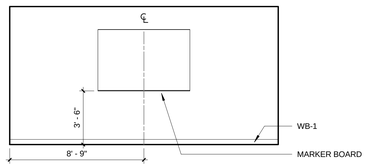

20 LIEUTENANT'S OFFICE 108 - NORTH
1/4" = 1'-0"

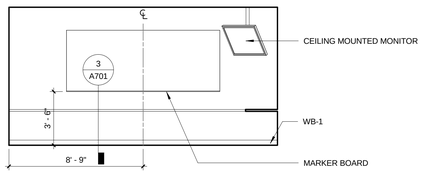

21 WATCH ROOM 109 - SOUTH
1/4" = 1'-0"

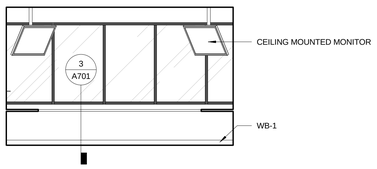

22 WATCH ROOM 109 - WEST
1/4" = 1'-0"

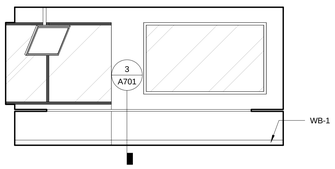

23 WATCH ROOM 109 - NORTH
1/4" = 1'-0"

OPN ARCHITECTS
301 N BROOM STREET #100
MADISON, WI 53703
608-819-0260 PHONE
www.opnarchitects.com
opn@opnarchitects.com

All reports, plans, specifications, computer files, field data, notes and other documents and instruments prepared by OPN Architects, Inc. as instruments of service shall remain the property of OPN Architects, Inc. OPN Architects, Inc. shall retain all common law, statutory and other reserved rights, including the copyright thereto.

© 2017 OPN Architects, Inc.

Owner
City of Madison Fire Department
314 W. Dayton St.
Madison, WI 53703

Project
Madison Fire Station 14
3201 Dairy Drive
Madison, WI 53718

Civil Engineer
Snyder & Associates, Inc
5010 Voges Rd
Madison WI, 53718
P. 608-838-0444

Structural Engineer
IMEG
1800 Deming Way #200
Middleton, WI 53562
P. 608-223-0444

Mechanical Engineer
IMEG
1800 Deming Way #200
Middleton, WI 53562
P. 608-223-0444

Electrical Engineer
IMEG
1800 Deming Way #200
Middleton, WI 53562
P. 608-223-0444

Key Plan

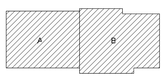

Sheet Issue Date
BID DOCUMENTS 11/03/17

Revision Date

BID DOCUMENTS

Drawing
INTERIOR ELEVATIONS

City of Madison Contract No. **8027**
OPN Project No. **17207000**

A406

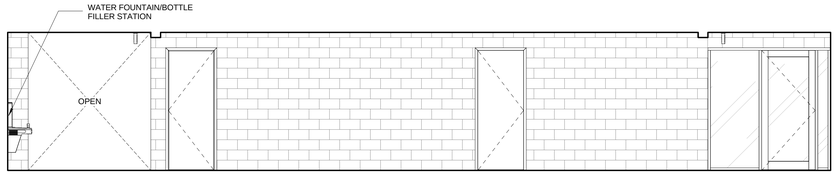

1 CORRIDOR 122 - SOUTH
1/4" = 1'-0"

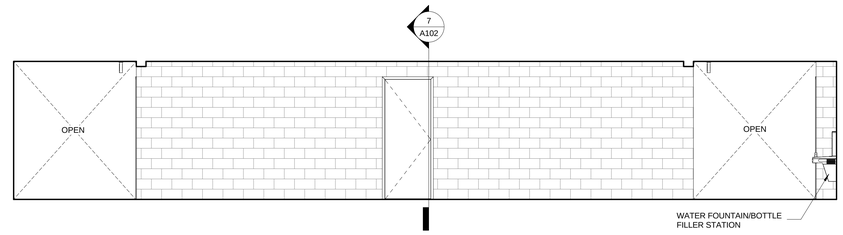

2 CORRIDOR 122 - NORTH
1/4" = 1'-0"

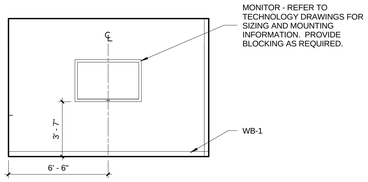

3 SMALL MEETING 102 - EAST
1/4" = 1'-0"

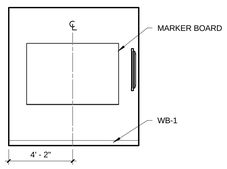

4 SMALL MEETING 102 - NORTH
1/4" = 1'-0"

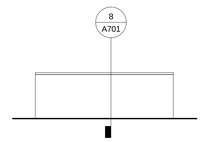

5 GREAT ROOM ISLAND 128 - EAST
1/4" = 1'-0"

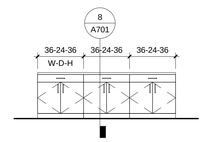

6 GREAT ROOM ISLAND 128 - WEST
1/4" = 1'-0"

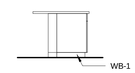

7 GREAT ROOM ISLAND 128 - NORTH
1/4" = 1'-0"

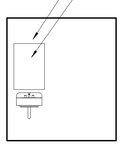

8 COMFORT ROOM 138 - NORTH
1/4" = 1'-0"

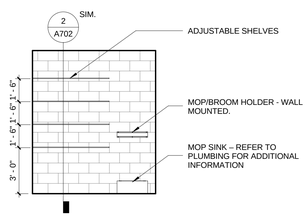

9 JANITOR'S CLOSET 104 - EAST
1/4" = 1'-0"

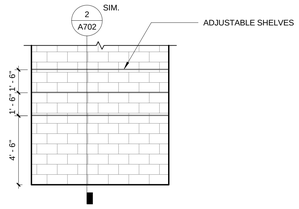

10 LINEN CLOSET 132 - EAST
1/4" = 1'-0"

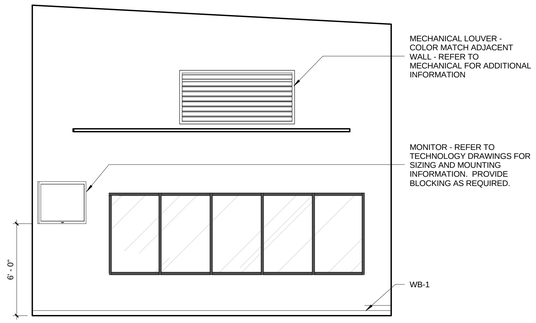

11 FITNESS 127 - EAST
1/4" = 1'-0"

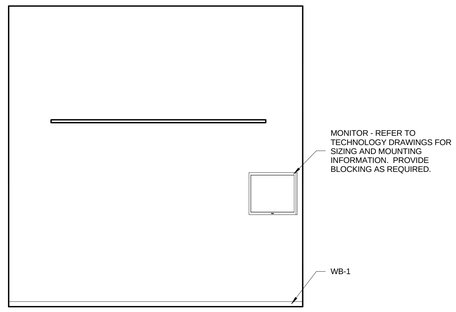

12 FITNESS 127 - NORTH
1/4" = 1'-0"

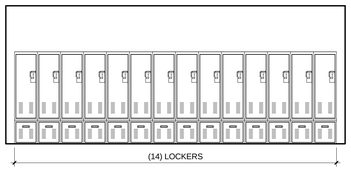

13 LOCKERS 134 - EAST
1/4" = 1'-0"

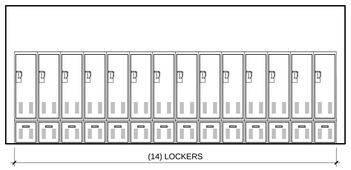

14 LOCKERS 134 - WEST
1/4" = 1'-0"

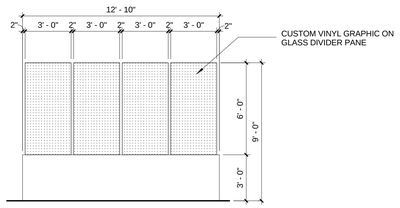

15 GREAT ROOM 128 - DIVIDING WALL - SOUTH
1/4" = 1'-0"

OPN ARCHITECTS
301 N BROOM STREET #100
MADISON, WI 53703
608-819-0260 PHONE
www.opnarchitects.com
opn@opnarchitects.com

All reports, plans, specifications, computer files, field data, notes and other documents and instruments prepared by OPN Architects, Inc. as instruments of service shall remain the property of OPN Architects, Inc. OPN Architects, Inc. shall retain all common law, statutory and other reserved rights, including the copyright thereto.

© 2017 OPN Architects, Inc.

Owner
City of Madison Fire Department
314 W. Dayton St.
Madison, WI 53703

Project
Madison Fire Station 14
3201 Dairy Drive
Madison, WI 53718

Civil Engineer
Snyder & Associates, Inc
5010 Voges Rd
Madison WI, 53718
P. 608-838-0444

Structural Engineer
IMEG
1800 Deming Way #200
Middleton, WI 53562
P. 608-223-0444

Mechanical Engineer
IMEG
1800 Deming Way #200
Middleton, WI 53562
P. 608-223-0444

Electrical Engineer
IMEG
1800 Deming Way #200
Middleton, WI 53562
P. 608-223-0444

Key Plan

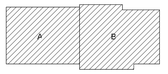

Sheet Issue Date	
BID DOCUMENTS	11/03/17

Revision	Date

BID DOCUMENTS

Drawing
INTERIOR ELEVATIONS

City of Madison Contract No. **8027**
OPN Project No. **17207000**

A407

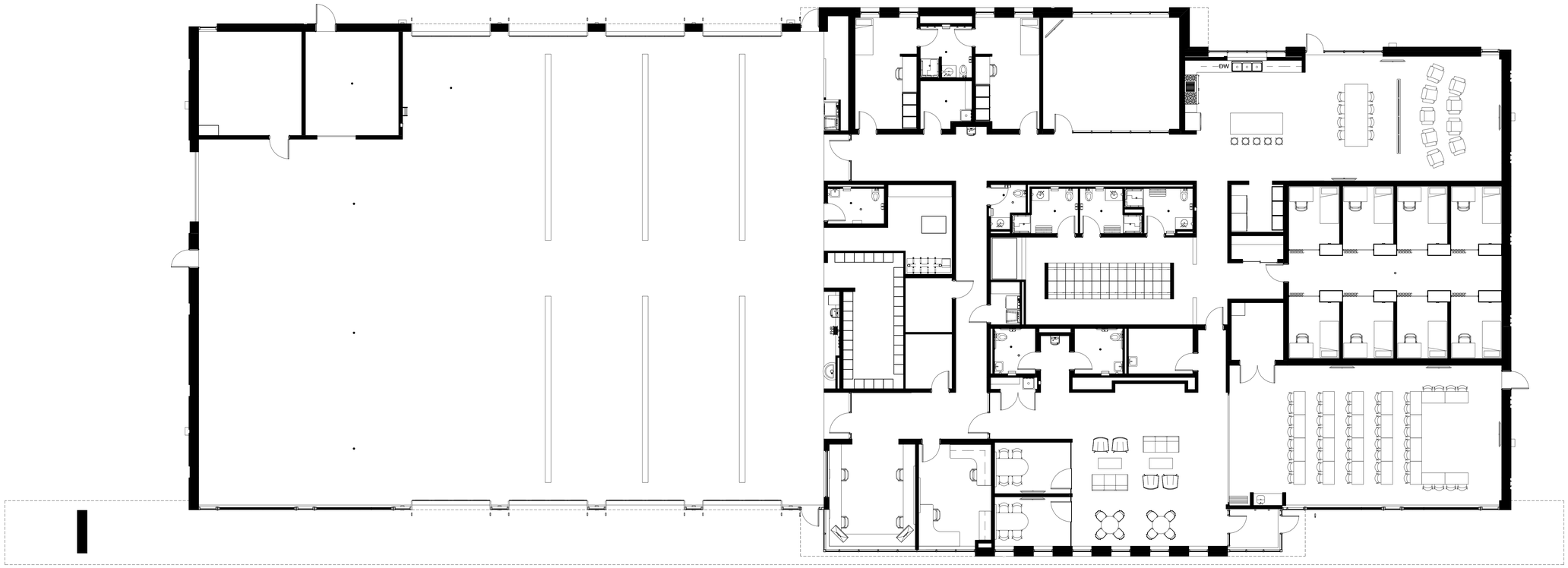

1 FURNITURE PLAN LEVEL 1
1/8" = 1'-0"

OPN ARCHITECTS

301 N BROOM STREET #100
MADISON, WI 53703
608-819-0260 PHONE
www.opnarchitects.com
opn@opnarchitects.com

All reports, plans, specifications, computer files, field data, notes and other documents and instruments prepared by OPN Architects, Inc. as instruments of service shall remain the property of OPN Architects, Inc. OPN Architects, Inc. shall retain all common law, statutory and other reserved rights, including the copyright thereto.

© 2017 OPN Architects, Inc.

Owner

City of Madison Fire Department

314 W. Dayton St.
Madison, WI 53703

Project

Madison Fire Station 14

3201 Dairy Drive
Madison, WI 53718

Civil Engineer

Snyder & Associates, Inc

5010 Voges Rd
Madison WI, 53718
P. 608-838-0444

Structural Engineer

IMEG

1800 Deming Way #200
Middleton, WI 53562
P. 608-223-0444

Mechanical Engineer

IMEG

1800 Deming Way #200
Middleton, WI 53562
P. 608-223-0444

Electrical Engineer

IMEG

1800 Deming Way #200
Middleton, WI 53562
P. 608-223-0444

Key Plan

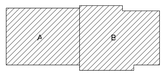

Sheet Issue Date
BID DOCUMENTS 11/03/17

Revision Date

BID DOCUMENTS

Drawing
FURNITURE PLAN

City of Madison Contract No. **8027**
OPN Project No. **17207000**

A501

ROOM FINISH SPECIFICATIONS:

CARPET:

CPT-1	MANUFACTURER:	INTERFACE CARPET
	STYLE:	OFF LINE - 138740AK00
	COLOR:	104334 PEWTER/CLOUD
	SIZE:	25CM X 1M
	INSTALLATION:	ASHLAR / REFER TO FINISH PLAN
CPT-2	MANUFACTURER:	INTERFACE CARPET
	STYLE:	ON LINE - 138700AK00
	COLOR:	103788 PEPPER
	SIZE:	25CM X 1M
	INSTALLATION:	ASHLAR / REFER TO FINISH PLAN
CPT-3	MANUFACTURER:	INTERFACE CARPET
	STYLE:	ON LINE - 138700AK00
	COLOR:	105272 BERRY
	SIZE:	25CM X 1M
	INSTALLATION:	ASHLAR / REFER TO FINISH PLAN

CORNER GUARD:

CG-1	MANUFACTURER:	KOROSEAL
	STYLE:	BENT METAL
	COLOR:	ALUMINUM
	SIZE:	1" WIE - FLOOR TO CEILING (A.F.F.)
	INSTALLATION:	REFER TO FINISH PLANS FOR LOCATION
	NOTE:	TYPICAL TYPES INCLUDE: 90 DEGREE ANGLE

GROUT:

GT-1	MANUFACTURER:	BOSTIK - TRU COLOR
	COLOR:	DELOREAN GRAY - H160
	APPLICATION:	WALLS AND FLOORS

PAINT:

PT-1	MANUFACTURER:	SHERWIN WILLIAMS
	COLOR:	SNOWBOUND SW 7004
	FINISH:	SATIN/EG-SHEL
PT-2	MANUFACTURER:	SHERWIN WILLIAMS
	COLOR:	MINDFUL GRAY SW 7016
	FINISH:	SATIN/EG-SHEL
PT-3	MANUFACTURER:	SHERWIN WILLIAMS
	COLOR:	DOVETAIL SW 7018
	FINISH:	SATIN/EG-SHEL
PT- 4	MANUFACTURER:	SHERWIN WILLIAMS
	COLOR:	BOLERO SW 7600
	FINISH:	SATIN/EG-SHEL

PORCELAIN TILE:

PCT-1	MANUFACTURER:	RBC TILE & STONE
	STYLE:	MARATHON
	COLOR:	WHITE
	SIZE:	12" X 24"
	APPLICATION:	RESTROOM / LOCKER ROOM WALLS (NOTE - SHOWER WALLS ARE SOLID SURFACE)
PCT-2	MANUFACTURER:	RBC TILE & STONE
	STYLE:	MARATHON
	COLOR:	WHITE
	SIZE:	18" X 24"
	APPLICATION:	RESTROOM / LOCKER ROOM WALLS (NOTE - SHOWER WALLS ARE SOLID SURFACE)
PCT-3	MANUFACTURER:	RBC TILE & STONE
	STYLE:	MARATHON
	COLOR:	BLACK
	SIZE:	RANDOM MOASIC - 4" TALL BAND
	APPLICATION:	ACCENT BAND IN RESTROOM / LOCKER ROOM WALLS (NOTE - SHOWER WALLS ARE SOLID SURFACE)
PCT-4	MANUFACTURER:	DALTILE
	STYLE:	EXHIBITION
	COLOR:	BLACK EX05 - UNPOLISHED
	SIZE:	24" X 48"
	APPLICATION:	FLOOR TILE

RUBBER FLOORING:

RB-1	MANUFACTURER:	NORA SYSTEMS, INC.
	STYLE:	NORAMENT GRANO 4881
	COLOR:	HEMATITE
	SIZE:	~39.53 (1004MM) X 39.53" (1004MM)
	INSTALLATION:	ASHLAR
RB-2	MANUFACTURER:	NORA SYSTEMS, INC.
	STYLE:	NORAMENT GRANO 4881
	COLOR:	CEPHALOPOD
	SIZE:	~39.53 (1004MM) X 39.53" (1004MM)
	INSTALLATION:	ASHLAR
RB-3	MANUFACTURER:	MONDO
	STYLE:	SPORT IMPACT
	COLOR:	BLACK
	SIZE:	ROLLS (6' WIDE, 3/8" THICK)
	INSTALLATION:	MONOLITHIC

SOLID SURFACE:

SLD-1	MANUFACTURER:	CORIAN
	COLOR:	GRAY
	APPLICATION:	SHOWER WALLS
SLD-2	MANUFACTURER:	CORIAN
	COLOR:	GLACIER WHITE
	APPLICATION:	WINDOW SILLS

SOLID SURFACE SHOWER TRAY:

ST	MANUFACTURER:	CORIAN
	COLOR:	GRAY
	SIZE:	CASUAL 800mm
	APPLICATION:	SHOWER TRAY

WALL BASE

WB-1	MANUFACTURER:	JOHNSONITE
	STYLE:	RUBBER COVE BASE
	SIZE:	2 1/2"
	COLOR:	63 BURNT UMBER

WOOD:

WD-1	MANUFACTURER:	MARSHFIELD DOOR SYSTEMS
	SPECIES:	WHITE MAPLE
	COLOR/FINISH:	AMBER 30 - 95
	APPLICATION:	DOORS

WOOD:

WD-1	MANUFACTURER:	MARSHFIELD DOOR SYSTEMS
	SPECIES:	WHITE MAPLE
	COLOR/FINISH:	AMBER 30 - 95
	APPLICATION:	DOORS

ROOM FINISH SCHEDULE

ROOM NAME	Number	FLOOR FINISH	FLOOR BASE	WALL FINISH NORTH	WALL FINISH EAST	WALL FINISH SOUTH	WALL FINISH WEST	CEILING FINISH	Remarks
LOBBY	101	POLISH CONC.	WB-1	SEE ELEVATION	SEE ELEVATION	SEE ELEVATION	PT-1		
SMALL MEETING	102	CPT-1, CPT-3	WB-1	PT-4	PT-1	--	PT-1		
SMALL MEETING	103	CPT-1, CPT-3	WB-1	PT-4	PT-1	--	PT-1		
JANITOR'S CLOSET	104	POLISH CONC.	WB-1	PT-1	PT-1	PT-2	PT-1		
CORRIDOR	105	PCT	PCT	PT-1	PT-1	PT-1	PT-1		
UNISEX (ADA)	106	PCT	PCT	PCT-1, PCT-2	PCT-1, PCT-2	PCT-1, PCT-2	PCT-1, PCT-2		
UNISEX (ADA)	107	PCT	PCT	PCT-1, PCT-2	PCT-1, PCT-2	PCT-1, PCT-2	PCT-1, PCT-2		
LIEUTENANT'S OFFICE	108	POLISH CONC.	WB-1	PT-1	PT-1	PT-1	PT-1		
WATCH	109	POLISH CONC.	WB-1	PT-1	PT-1	PT-1	PT-1		
CORRIDOR	110	POLISH CONC.	WB-1	PT-1	PT-1	PT-1	PT-1		
APPARATUS BAY	111	RF-1, RF-2, RF-3	WB-1	PT-2	PT-2	PT-2	PT-2	PT-3	
ELECTRICAL & COMPRESSOR	112	RF-1	WB-1	PT-2	PT-2	PT-2	PT-2	PT-3	
TOOL STORAGE & WATER	113	RF-1	WB-1	PT-2	PT-2	PT-2	PT-2	PT-3	
STAIR	114	--	WB-1	PT-1	PT-1	PT-1	PT-1		
DIRTY	115	PCT	PCT	PCT-1, PCT-2	PCT-1, PCT-2	PCT-1, PCT-2	PCT-1, PCT-2		
WORKSHOP / GENERAL STORAGE	116	RF-1	WB-1	PT-2	PT-2	PT-2	PT-2	PT-3	
TURNOUT	117	RF-1	WB-1	PT-2	PT-2	PT-2	PT-2	PT-3	
EMS STORAGE	118	POLISH CONC.	WB-1	PT-1	PT-1	PT-1	PT-1		
I.T.	119	POLISH CONC.	WB-1	PT-1	PT-1	PT-1	PT-1		
LAUNDRY	120	POLISH CONC.	WB-1	PT-1	PT-1	PT-1	PT-1		
CORRIDOR	121	POLISH CONC.	WB-1	PT-1	PT-1	PT-1	PT-1		
UNISEX	122	PCT	PCT	PCT-1, PCT-2	PCT-1, PCT-2	PCT-1, PCT-2	PCT-1, PCT-2		
LT. QUARTERS	123	RB-1	WB-1	PT-1	PT-1	PT-1	PT-1		
LT. SHOWER	124	PCT	PCT	PCT-1, PCT-2	PCT-1, PCT-2	PCT-1, PCT-2	PCT-1, PCT-2		
LT. QUARTERS	125	POLISH CONC.	WB-1	PT-1	PT-1	PT-1	PT-1		
JANITOR'S CLOSET	126	POLISH CONC.	WB-1	PT-1	PT-1	PT-1	PT-1		
FITNESS	127	RB-3	WB-1	PT-4	PT-1	PT-1	PT-1		
GREAT ROOM	128	POLISH CONC., PCT	WB-1	PT-1	PT-1	PT-1	PT-1		
PANTRY	129	POLISH CONC.	WB-1	PT-1	PT-1	PT-1	PT-1		
CORRIDOR	130	POLISH CONC.	WB-1	PT-1	PT-1	PT-1	PT-1		
CORRIDOR	131	POLISH CONC.	WB-1	PT-1	PT-1	PT-1	PT-1		
LINEN CLOSET	132	POLISH CONC.	WB-1	PT-1	PT-1	PT-1	PT-1		
DORM ROOM	133	RB-1, RB-2	WB-1	PT-4	PT-1	PT-4	PT-1		
LOCKER ROOM	134	POLISH CONC.	WB-1	PT-1	PT-1	PT-1	PT-1		
UNISEX	135	PCT	PCT	PCT-1, PCT-2	PCT-1, PCT-2	PCT-1, PCT-2	PCT-1, PCT-2		
UNISEX	136	PCT	PCT	PCT-1, PCT-2	PCT-1, PCT-2	PCT-1, PCT-2	PCT-1, PCT-2		
UNISEX	137	PCT	PCT	PCT-1, PCT-2	PCT-1, PCT-2	PCT-1, PCT-2	PCT-1, PCT-2		
COMFORT ROOM	138	PCT	PCT	PCT-1, PCT-2	PCT-1, PCT-2	PCT-1, PCT-2	PCT-1, PCT-2		
COMMUNITY ROOM STORAGE	139	POLISH CONC.	WB-1	PT-1	PT-1	PT-1	PT-1		
COMMUNITY / TRAINING ROOM	140	SEE FINISH PLAN	WB-1	PT-1	PT-1	PT-1	PT-1		

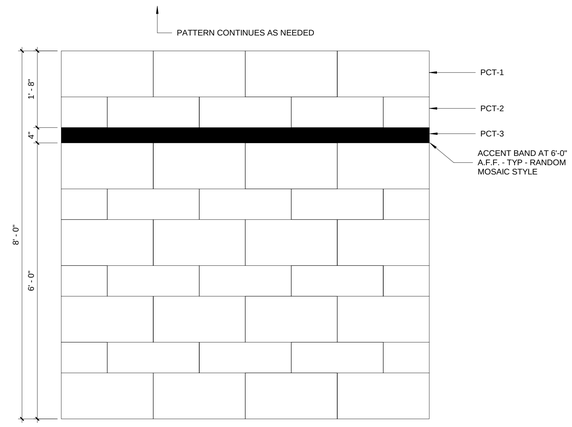

1 TYPICAL PCT WALL LAYOUT

OPN ARCHITECTS
301 N BROOM STREET #100
MADISON, WI 53703
608-819-0260 PHONE
www.opnarchitects.com
opn@opnarchitects.com

All reports, plans, specifications, computer files, field data, notes and other documents and instruments prepared by OPN Architects, Inc. as instruments of service shall remain the property of OPN Architects, Inc. OPN Architects, Inc. shall retain all common law, statutory and other reserved rights, including the copyright thereto.

© 2017 OPN Architects, Inc.

Owner
City of Madison Fire Department
314 W. Dayton St.
Madison, WI 53703

Project
Madison Fire Station 14
3201 Dairy Drive
Madison, WI 53718

Civil Engineer
Snyder & Associates, Inc
5010 Voges Rd
Madison WI, 53718
P. 608-838-0444

Structural Engineer
IMEG
1800 Deming Way #200
Middleton, WI 53562
P. 608-223-0444

Mechanical Engineer
IMEG
1800 Deming Way #200
Middleton, WI 53562
P. 608-223-0444

Electrical Engineer
IMEG
1800 Deming Way #200
Middleton, WI 53562
P. 608-223-0444

Key Plan

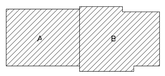

Sheet Issue Date
BID DOCUMENTS 11/03/17

Revision Date

BID DOCUMENTS

Drawing
FINISH SCHEDULE AND SPECIFICATIONS

City of Madison Contract No. **8027**
OPN Project No. **17207000**

A601

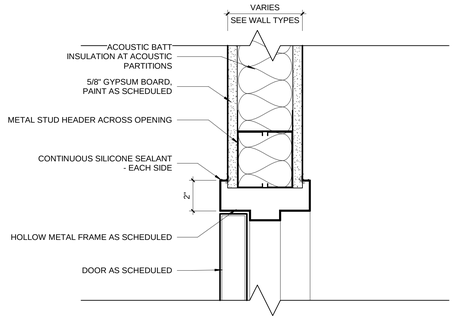

3 GE - DOOR - H.M. FRAME HEAD

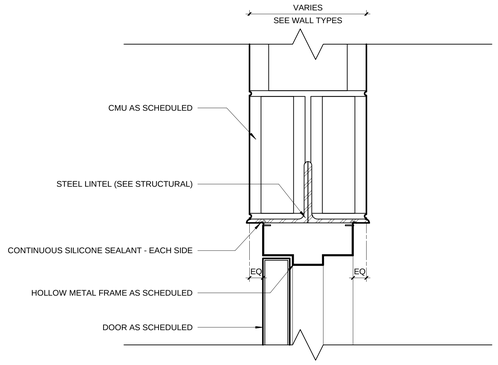

4 GE - DOOR - H.M. FRAME HEAD @ CMU

DOOR SCHEDULE

DOOR NUMBER	PANEL						FRAME					FIRE RATING	REMARKS
	PANEL QUANTITY	PANEL TYPE	WIDTH	HEIGHT	PANEL MATERIAL	PANEL FINISH	FRAME TYPE	FRAME WIDTH	FRAME HEIGHT	MATERIAL	FINISH		
100A	1	FG	3' - 0"	7' - 10"	ALUM	PT	--	--		ALUM	PT	--	--
101A	1	FG	3' - 6"	7' - 10"	ALUM	PT	--	--		ALUM	PT	--	--
101B	1	NL	3' - 0"	7' - 10"	WD	ST	AA	3' - 4"	8' - 0"	HM	PT	--	--
102A	1	G	3' - 6"	9' - 0"	ALUM	PT	--	--		--	--	--	1
103A	1	G	3' - 6"	9' - 0"	ALUM	PT	--	--		--	--	--	1
104A	2	F	6' - 0"	7' - 10"	WD	PT	AA	6' - 4"	8' - 0"	HM	PT	--	2
106A	1	F	3' - 0"	7' - 10"	WD	ST	AA	3' - 4"	8' - 0"	HM	PT	--	3
107A	1	F	3' - 0"	7' - 10"	WD	ST	AA	3' - 4"	8' - 0"	HM	PT	--	3
108A	1	NL	3' - 0"	7' - 10"	WD	ST	AA	3' - 4"	8' - 0"	HM	PT	--	--
110A	1	FG	3' - 6"	7' - 10"	ALUM	PT	--	--		ALUM	PT	--	7
112A	1	F	3' - 4"	7' - 10"	HM	PT	AA	3' - 8"	8' - 0"	HM	PT	--	2
115A	1	F	3' - 0"	7' - 10"	HM	PT	AA	3' - 4"	8' - 0"	HM	PT	--	--
118A	1	F	3' - 0"	7' - 10"	WD	ST	AA	3' - 4"	8' - 0"	HM	PT	--	--
119A	1	F	3' - 0"	7' - 10"	WD	ST	AA	3' - 4"	8' - 0"	HM	PT	--	--
120A	1	F	3' - 0"	7' - 10"	WD	ST	AA	3' - 4"	8' - 0"	HM	PT	--	--
122A	1	F	3' - 0"	7' - 10"	WD	ST	AA	3' - 4"	8' - 0"	HM	PT	--	3
123A	1	F	3' - 0"	7' - 10"	WD	ST	AA	3' - 4"	8' - 0"	HM	PT	--	--
124A	1	F	3' - 0"	7' - 10"	WD	ST	AA	3' - 4"	8' - 0"	HM	PT	--	--
124B	1	F	3' - 0"	7' - 10"	WD	ST	AA	3' - 4"	8' - 0"	HM	PT	--	--
125A	1	F	3' - 0"	7' - 10"	WD	ST	AA	3' - 4"	8' - 0"	HM	PT	--	--
126A	1	F	3' - 0"	7' - 10"	WD	ST	AA	3' - 4"	8' - 0"	HM	PT	--	--
127A	1	F	3' - 0"	7' - 10"	WD	PT	BB	--		ALUM	PT	--	--
130A	1	FG	3' - 6"	7' - 10"	ALUM	PT	--	--		ALUM	PT	--	7
132A	2	F	6' - 0"	7' - 10"	WD	ST	AA	6' - 4"	8' - 0"	HM	PT	--	2, 4
133A	1	NL	3' - 0"	7' - 10"	WD	ST	AA	3' - 4"	8' - 0"	HM	PT	20 MIN.	--
135A	1	F	3' - 0"	7' - 10"	WD	ST	AA	3' - 4"	8' - 0"	HM	PT	--	3
136A	1	F	3' - 0"	7' - 10"	WD	ST	AA	3' - 4"	8' - 0"	HM	PT	--	3
137A	1	F	3' - 0"	7' - 10"	WD	ST	AA	3' - 4"	8' - 0"	HM	PT	--	3
138A	1	F	3' - 0"	7' - 10"	WD	ST	AA	3' - 4"	8' - 0"	HM	PT	--	--
139A	2	F	6' - 0"	7' - 10"	WD	PT	AA	6' - 4"	8' - 0"	HM	PT	--	2
200A	--	--	19' - 3 1/4"	8' - 0"	--	--	CC	19' - 3 1/4"	9' - 0"	--	--	--	--
EXT-01	1	FG	3' - 0"	7' - 10"	ALUM	PT	--	--		ALUM	PT	--	--
EXT-02	1	FG	3' - 0"	7' - 10"	ALUM	PT	--	--		ALUM	PT	--	
EXT-03	1	F	3' - 0"	7' - 10"	IHM	PT	AA	3' - 4"	8' - 0"	IHM	PT	--	5
EXT-04	1	F	3' - 4"	7' - 10"	IHM	PT	AA	3' - 4"	8' - 0"	IHM	PT	--	5
EXT-05	1	FG	3' - 0"	7' - 10"	ALUM	PT	--	--		ALUM	PT	--	--
EXT-06	1	FG	3' - 0"	7' - 10"	ALUM	PT	--	--		ALUM	PT	--	--
EXT-07	1	F	3' - 0"	7' - 10"	IHM	PT	AA	3' - 4"	8' - 0"	IHM	PT	--	5

OVERHEAD DOOR SCHEDULE

DOOR NUMBER	PANEL TYPE	WIDTH	HEIGHT	PANEL MATERIAL	PANEL FINISH	REMARKS
OH-01	SOH	13' - 8"	14' - 0"	ISTL	PT	6
OH-02	SOH	13' - 8"	14' - 0"	ISTL	PT	6
OH-03	SOH	13' - 8"	14' - 0"	ISTL	PT	6
OH-04	SOH	13' - 8"	14' - 0"	ISTL	PT	6
OH-05	COH	12' - 0"	12' - 0"	ISTL	PT	--
OH-06	COH	6' - 8"	8' - 0"	STL	PT	--
OH-07	SOH	13' - 8"	14' - 0"	ISTL	PT	6
OH-08	SOH	13' - 8"	14' - 0"	ISTL	PT	6
OH-09	SOH	13' - 8"	14' - 0"	ISTL	PT	6
OH-10	SOH	13' - 8"	14' - 0"	ISTL	PT	6

REMARKS

1. FRAMELESS GLASS DOOR. CUSTOM VINYL GRAPIC ARTWORK. ARCHITECT TO PROVIDE DESIGN CONCEPT
2. PAINT DOOR AND FRAME TO MATCH ADJACENT WALL
3. RESTROOM SIGN REQUIRED.
4. SLIDING DOOR
5. PAINT DOOR AND FRAME TO MATCH ADJACENT WALL. (2) COLORS REQUIRED FOR INTERIOR / EXTERIOR
6. REFER TO A801 FOR ADDITIONAL INFORMATION ON ALTERNATE #1 DOOR TYPE AND DETAILS
7. INTERIOR DOOR - THERMALLY BROKEN ALUMINUM STOREFRONT WINDOW SYSTEM, 1" INSULATED GLASS UNITS, WEATHER STRIPPING AND DOOR THRESHOLD.

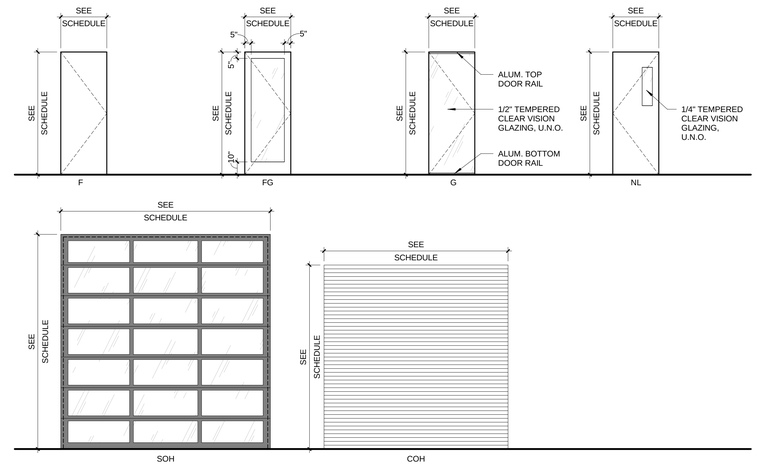

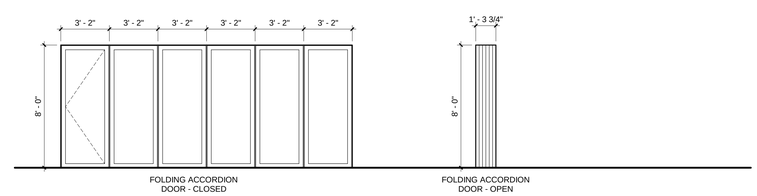

DOOR PANEL TYPES

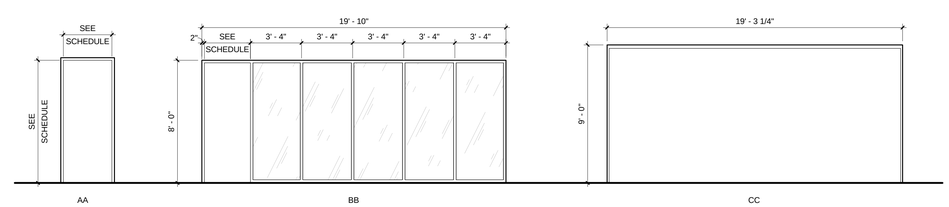

DOOR FRAME ELEVATIONS

OPN ARCHITECTS
301 N BROOM STREET #100
MADISON, WI 53703
608-819-0260 PHONE
www.opnarchitects.com
opn@opnarchitects.com

All reports, plans, specifications, computer files, field data, notes and other documents and instruments prepared by OPN Architects, Inc. as instruments of service shall remain the property of OPN Architects, Inc. OPN Architects, Inc. shall retain all common law, statutory and other reserved rights, including the copyright thereto.

© 2017 OPN Architects, Inc.

Owner
City of Madison Fire Department
314 W. Dayton St.
Madison, WI 53703

Project
Madison Fire Station 14
3201 Dairy Drive
Madison, WI 53718

Civil Engineer
Snyder & Associates, Inc
5010 Voges Rd
Madison WI, 53718
P. 608-838-0444

Structural Engineer
IMEG
1800 Deming Way #200
Middleton, WI 53562
P. 608-223-0444

Mechanical Engineer
IMEG
1800 Deming Way #200
Middleton, WI 53562
P. 608-223-0444

Electrical Engineer
IMEG
1800 Deming Way #200
Middleton, WI 53562
P. 608-223-0444

Key Plan

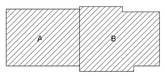

Sheet Issue Date
BID DOCUMENTS 11/03/17

Revision Date

BID DOCUMENTS

Drawing
DOOR SCHEDULE, PANEL AND FRAME TYPES

City of Madison Contract No. **8027**
OPN Project No. **17207000**

A602

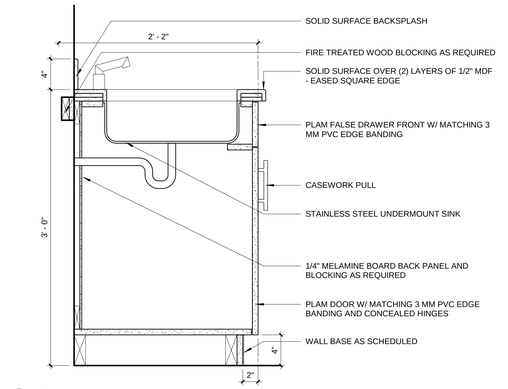

1 Casework - 1
1 1/2" = 1'-0"

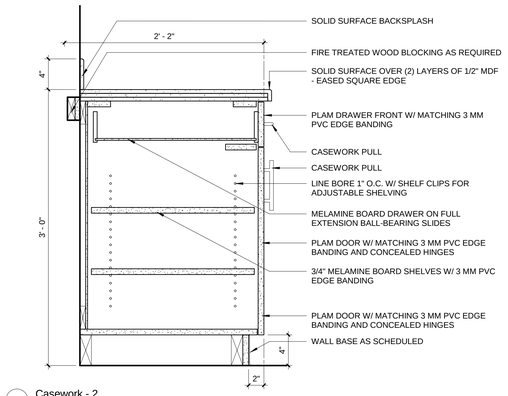

2 Casework - 2
1 1/2" = 1'-0"

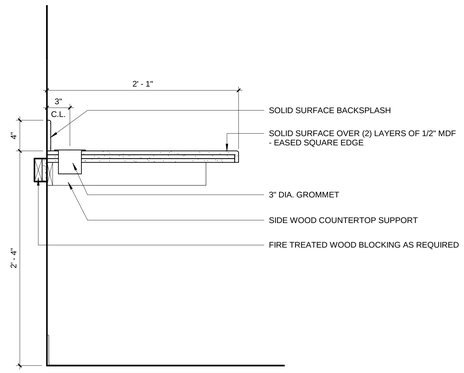

3 Casework - 3
1 1/2" = 1'-0"

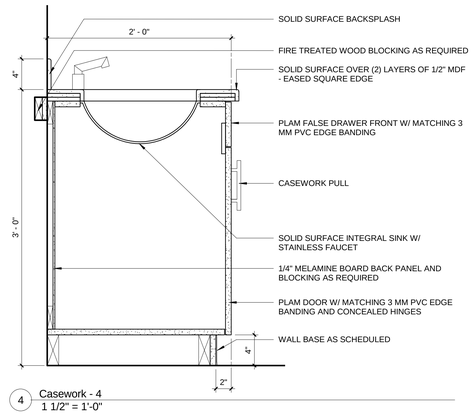

4 Casework - 4
1 1/2" = 1'-0"

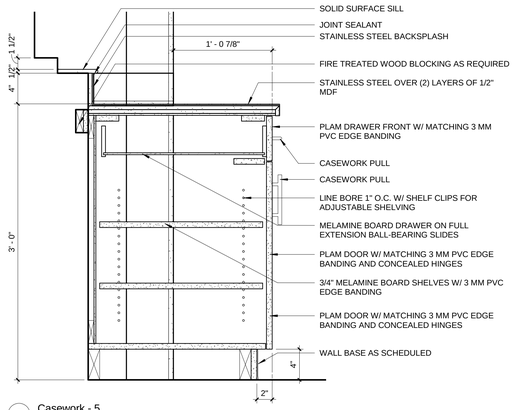

5 Casework - 5
1 1/2" = 1'-0"

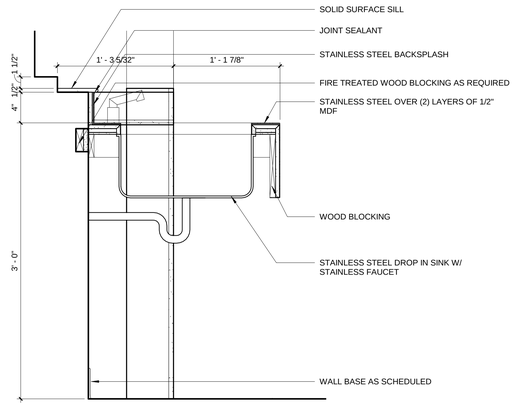

6 Casework - 6
1 1/2" = 1'-0"

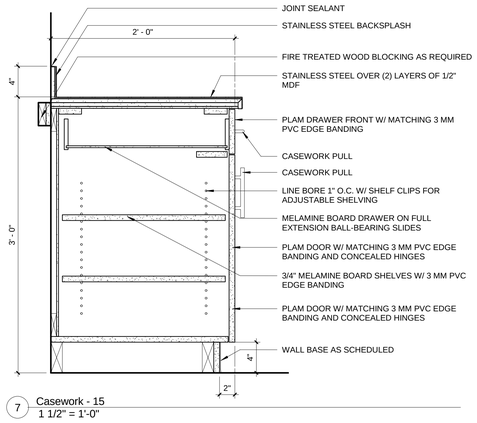

7 Casework - 15
1 1/2" = 1'-0"

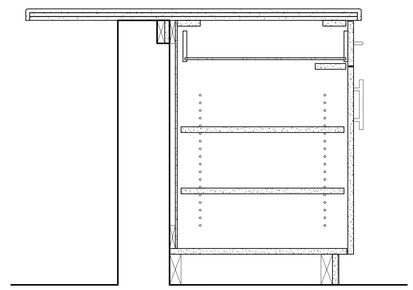

8 Casework - 7
1 1/2" = 1'-0"

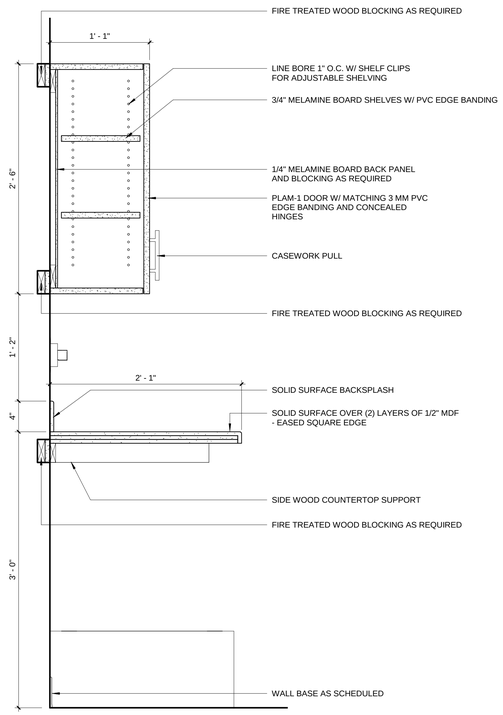

9 Casework - 8
1 1/2" = 1'-0"

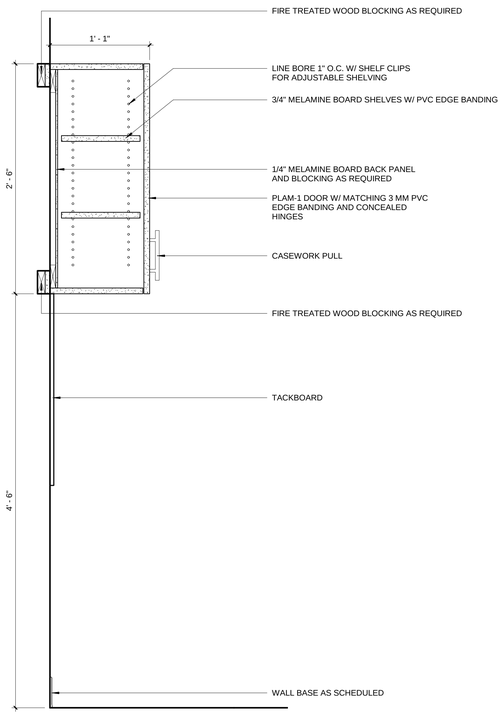

10 Casework - 9
1 1/2" = 1'-0"

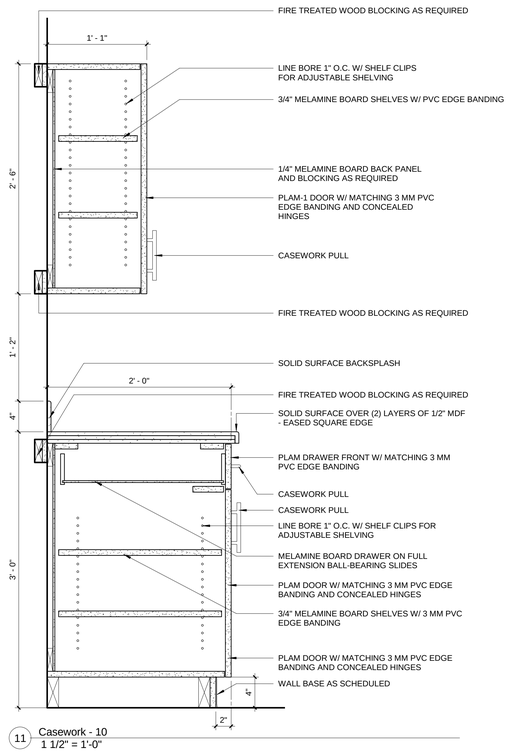

11 Casework - 10
1 1/2" = 1'-0"

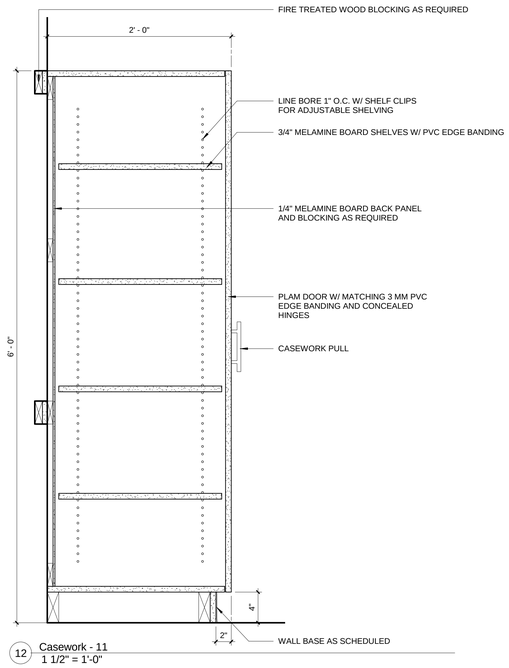

12 Casework - 11
1 1/2" = 1'-0"

OPN ARCHITECTS

301 N BROOM STREET #100
MADISON, WI 53703
608-819-0260 PHONE
www.opnarchitects.com
opn@opnarchitects.com

All reports, plans, specifications, computer files, field data, notes and other documents and instruments prepared by OPN Architects, Inc. as instruments of service shall remain the property of OPN Architects, Inc. OPN Architects, Inc. shall retain all common law, statutory and other reserved rights, including the copyright thereto.

© 2017 OPN Architects, Inc.

Owner

City of Madison Fire Department

314 W. Dayton St.
Madison, WI 53703

Project

Madison Fire Station 14

3201 Dairy Drive
Madison, WI 53718

Civil Engineer

Snyder & Associates, Inc

5010 Voges Rd
Madison WI, 53718
P. 608-838-0444

Structural Engineer

IMEG

1800 Deming Way #200
Middleton, WI 53562
P. 608-223-0444

Mechanical Engineer

IMEG

1800 Deming Way #200
Middleton, WI 53562
P. 608-223-0444

Electrical Engineer

IMEG

1800 Deming Way #200
Middleton, WI 53562
P. 608-223-0444

Key Plan

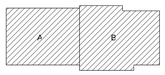

Sheet Issue Date	
BID DOCUMENTS	11/03/17

Revison	Date

BID DOCUMENTS

Drawing

CASEWORK DETAILS

City of Madison Contract No. **8027**
OPN Project No. **17207000**

A701

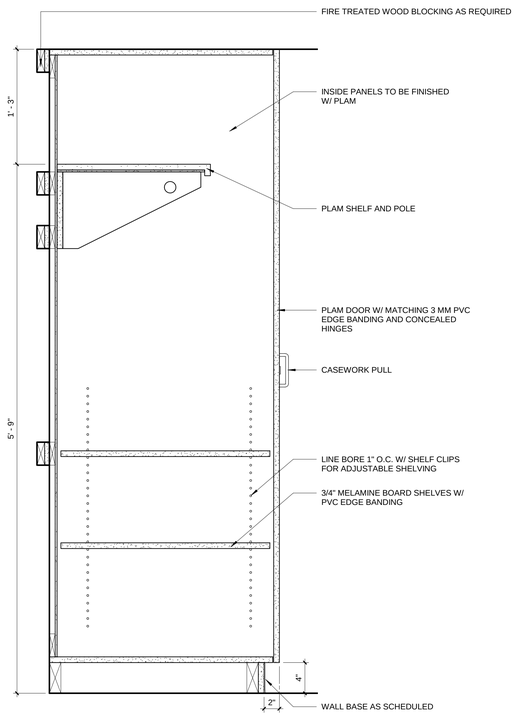

1 Casework - 12
1 1/2" = 1'-0"

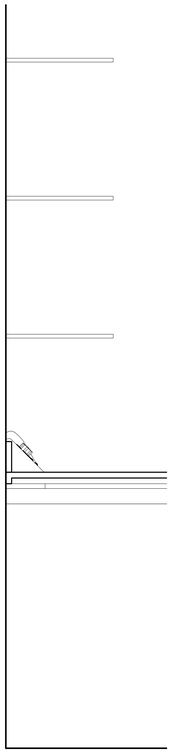

2 Casework - 13
1 1/2" = 1'-0"

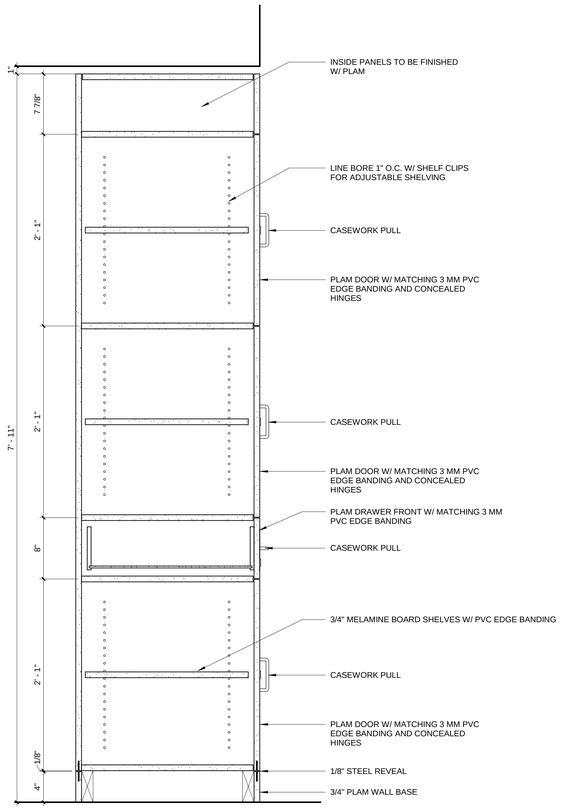

3 Casework - 14
1 1/2" = 1'-0"

OPN ARCHITECTS

301 N BROOM STREET #100
MADISON, WI 53703
608-819-0260 PHONE
www.opnarchitects.com
opn@opnarchitects.com

All reports, plans, specifications, computer files, field data, notes and other documents and instruments prepared by OPN Architects, Inc. as instruments of service shall remain the property of OPN Architects, Inc. OPN Architects, Inc. shall retain all common law, statutory and other reserved rights, including the copyright thereto.

© 2017 OPN Architects, Inc.

Owner

City of Madison Fire Department

314 W. Dayton St.
Madison, WI 53703

Project

Madison Fire Station 14

3201 Dairy Drive
Madison, WI 53718

Civil Engineer

Snyder & Associates, Inc

5010 Voges Rd
Madison WI, 53718
P. 608-838-0444

Structural Engineer

IMEG

1800 Deming Way #200
Middleton, WI 53562
P. 608-223-0444

Mechanical Engineer

IMEG

1800 Deming Way #200
Middleton, WI 53562
P. 608-223-0444

Electrical Engineer

IMEG

1800 Deming Way #200
Middleton, WI 53562
P. 608-223-0444

Key Plan

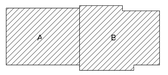

Sheet Issue Date

BID DOCUMENTS 11/03/17

Revision Date

BID DOCUMENTS

Drawing

CASEWORK DETAILS

City of Madison Contract No. **8027**
OPN Project No. **17207000**

A702

OVERHEAD DOOR SCHEDULE

DOOR NUMBER	PANEL TYPE	WIDTH	HEIGHT	PANEL MATERIAL	PANEL FINISH	REMARKS
OH-01	FF	13' - 8"	14' - 0"	ISTL	PT	6
OH-02	FF	13' - 8"	14' - 0"	ISTL	PT	6
OH-03	FF	13' - 8"	14' - 0"	ISTL	PT	6
OH-04	FF	13' - 8"	14' - 0"	ISTL	PT	6
OH-05	COH	12' - 0"	12' - 0"	ISTL	PT	--
OH-06	COH	6' - 8"	8' - 0"	STL	PT	--
OH-07	FF	13' - 8"	14' - 0"	ISTL	PT	6
OH-08	FF	13' - 8"	14' - 0"	ISTL	PT	6
OH-09	FF	13' - 8"	14' - 0"	ISTL	PT	6
OH-10	FF	13' - 8"	14' - 0"	ISTL	PT	6

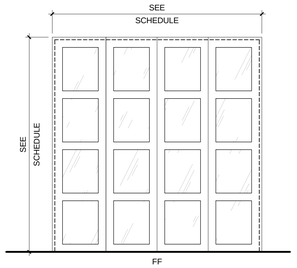

DOOR PANEL TYPES - ALTERNATE

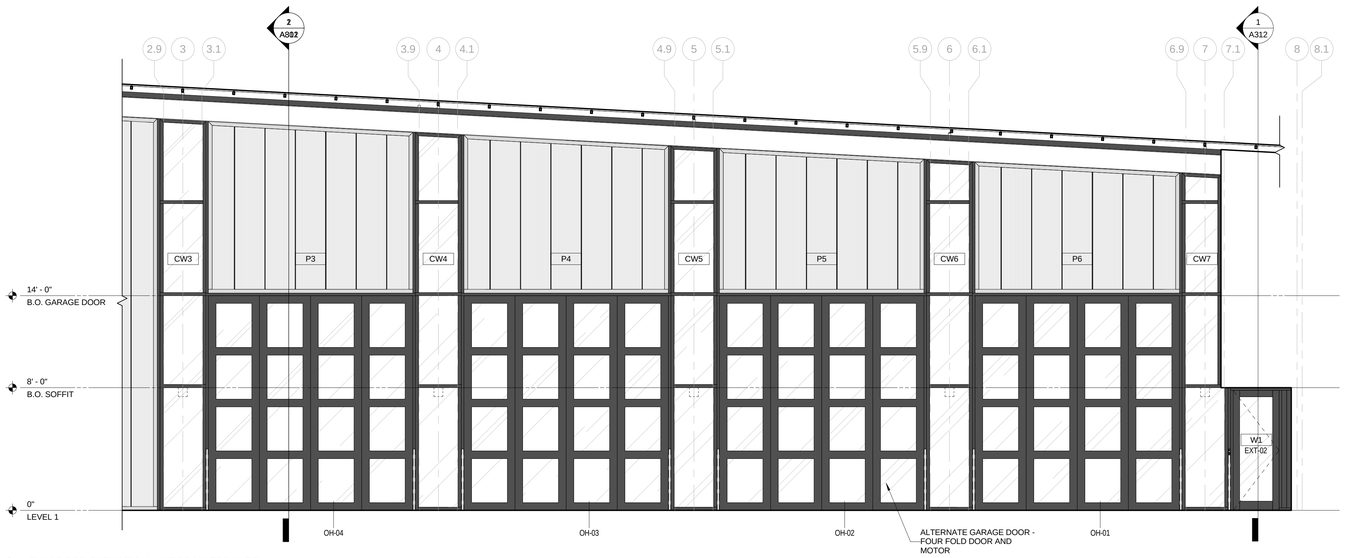

3 ENLARGED ELEVATION - WEST (ALTERNATE)
1/4" = 1'-0"

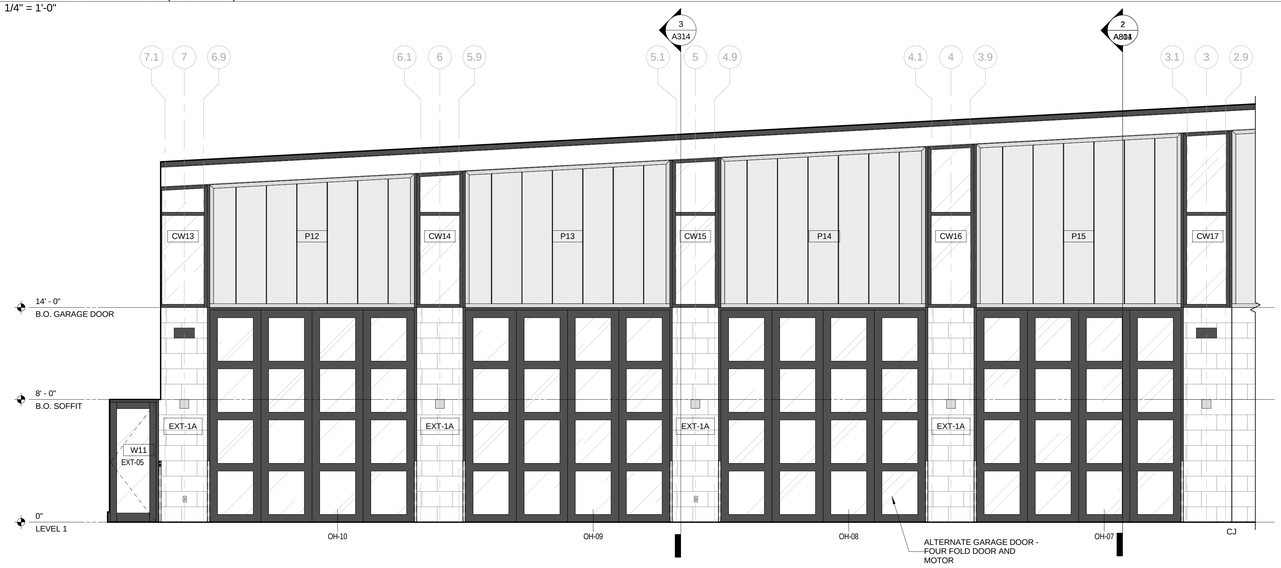

4 ENLARGED ELEVATION - EAST (ALTERNATE)
1/4" = 1'-0"

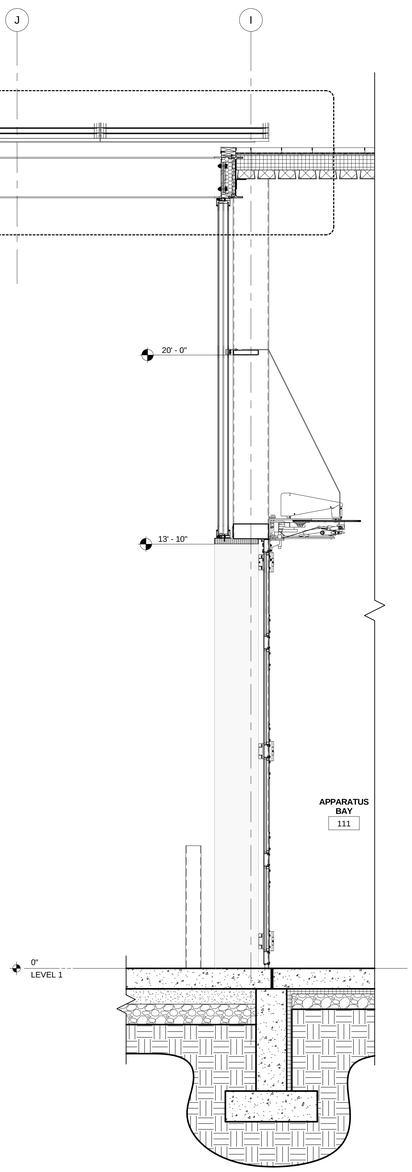

1 WALL SECTION
1/2" = 1'-0"

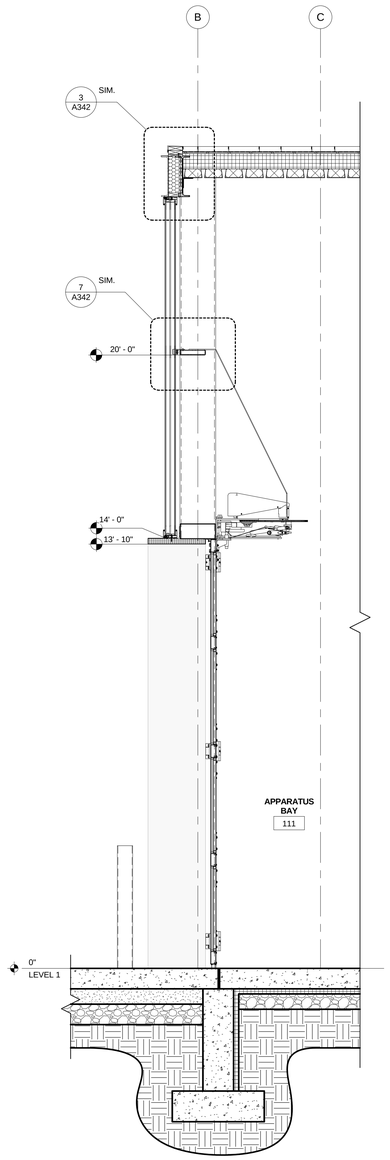

2 WALL SECTION
1/2" = 1'-0"

OPN ARCHITECTS

301 N BROOM STREET #100
MADISON, WI 53703
608-819-0260 PHONE
www.opnarchitects.com
opn@opnarchitects.com

All reports, plans, specifications, computer files, field data, notes and other documents and instruments prepared by OPN Architects, Inc. as instruments of service shall remain the property of OPN Architects, Inc. OPN Architects, Inc. shall retain all common law, statutory and other reserved rights, including the copyright thereto.

© 2017 OPN Architects, Inc.

Owner

City of Madison Fire Department

314 W. Dayton St.
Madison, WI 53703

Project

Madison Fire Station 14

3201 Dairy Drive
Madison, WI 53718

Civil Engineer

Snyder & Associates, Inc

5010 Voges Rd
Madison WI, 53718
P. 608-838-0444

Structural Engineer

IMEG

1800 Deming Way #200
Middleton, WI 53562
P. 608-223-0444

Mechanical Engineer

IMEG

1800 Deming Way #200
Middleton, WI 53562
P. 608-223-0444

Electrical Engineer

IMEG

1800 Deming Way #200
Middleton, WI 53562
P. 608-223-0444

Key Plan

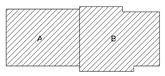

Sheet Issue Date

BID DOCUMENTS 11/03/17

Revison Date

BID DOCUMENTS

Drawing

ALTERNATE #1

City of Madison Contract No. **8027**
OPN Project No. **17207000**

A801

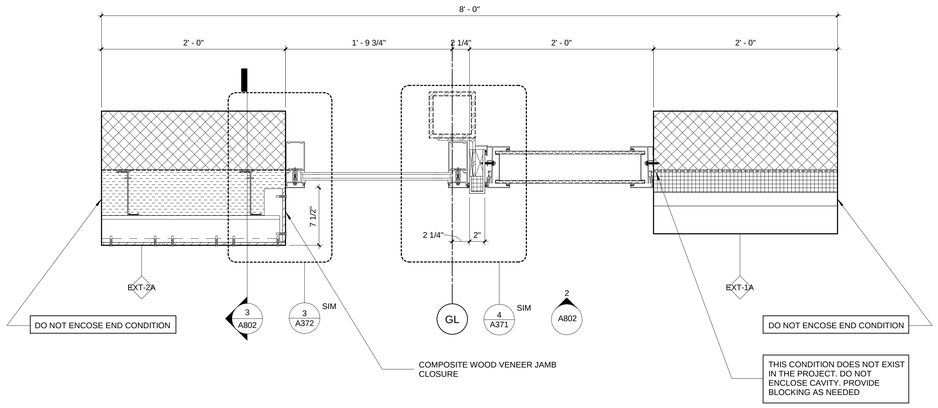

1 MOCK-UP PLAN
1 1/2" = 1'-0"

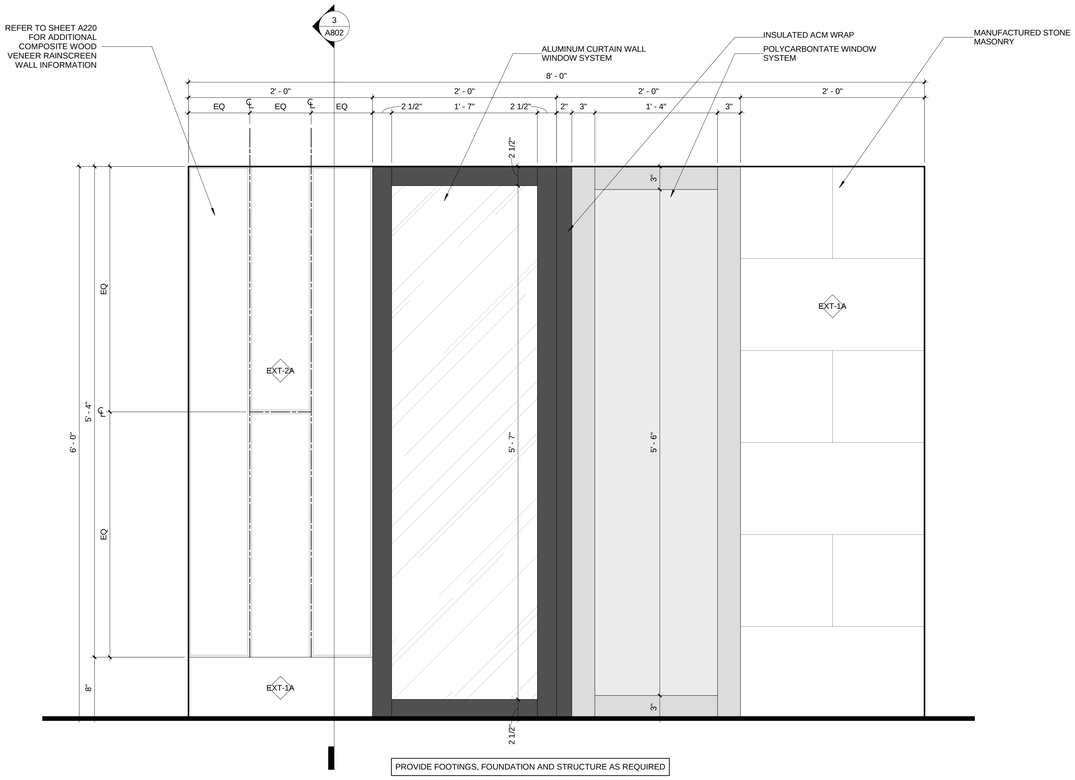

2 MOCK-UP ELEVATION
1 1/2" = 1'-0"

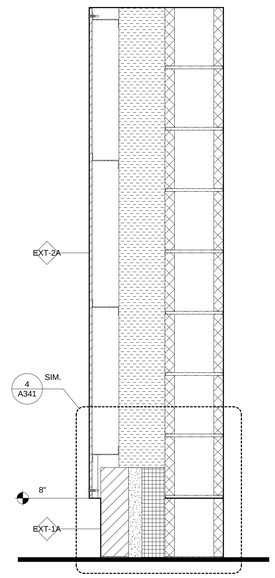

3 MOCK-UP SECTION
1 1/2" = 1'-0"

OPN ARCHITECTS

301 N BROOM STREET #100
MADISON, WI 53703
608-819-0260 PHONE
www.opnarchitects.com
opn@opnarchitects.com

All reports, plans, specifications, computer files, field data, notes and other documents and instruments prepared by OPN Architects, Inc. as instruments of service shall remain the property of OPN Architects, Inc. OPN Architects, Inc. shall retain all common law, statutory and other reserved rights, including the copyright thereto.

© 2017 OPN Architects, Inc.

Owner
City of Madison Fire Department
314 W. Dayton St.
Madison, WI 53703

Project
Madison Fire Station 14
3201 Dairy Drive
Madison, WI 53718

Civil Engineer
Snyder & Associates, Inc
5010 Voges Rd
Madison WI, 53718
P. 608-838-0444

Structural Engineer
IMEG
1800 Deming Way #200
Middleton, WI 53562
P. 608-223-0444

Mechanical Engineer
IMEG
1800 Deming Way #200
Middleton, WI 53562
P. 608-223-0444

Electrical Engineer
IMEG
1800 Deming Way #200
Middleton, WI 53562
P. 608-223-0444

Key Plan

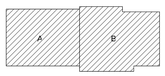

Sheet Issue Date
BID DOCUMENTS 11/03/17

Revision Date

BID DOCUMENTS

Drawing
MOCK-UP

City of Madison Contract No. **8027**
OPN Project No. **17207000**

A802

PRINTED: 10/26/2017 4:45:08 PM

DESIGN CRITERIA

1. CODES:
INTERNATIONAL BUILDING CODE (IBC) 2015
AMERICAN CONCRETE INSTITUTE BUILDING CODE REQUIREMENTS FOR STRUCTURAL CONCRETE (ACI 318-14)
AMERICAN CONCRETE INSTITUTE BUILDING CODE REQUIREMENTS FOR MASONRY STRUCTURES (ACI 530-13)
AMERICAN INSTITUTE OF STEEL CONSTRUCTION (AISC) SPECIFICATION FOR STRUCTURAL STEEL BUILDINGS
ALLOWABLE STRENGTH DESIGN (ASD)(AISC 360-10) FOURTEENTH EDITION, 2010
AMERICAN WELDING SOCIETY D1.1
NORTH AMERICAN SPECIFICATION FOR THE DESIGN OF COLD-FORMED STEEL STRUCTURAL MEMBERS (AISI S100-12)

2. DESIGN LOADS:

RISK CATEGORY	IV
SEISMIC	
SOIL CLASSIFICATION	D
SPECTRAL RESPONSE ACCELERATION, Ss	0.11 g
SPECTRAL RESPONSE ACCELERATION, S1	0.04 g
SHORT PERIOD DESIGN ACCELERATION, Sds	0.12 g
LONG PERIOD DESIGN ACCELERATION, Sd1	0.06 g
IMPORTANCE FACTOR	1.5
SEISMIC DESIGN CATEGORY	A
SEISMIC FORCE RESISTING SYSTEM	ORDINARY REINFORCED MASONRY SHEAR WALLS
ANALYSIS PROCEDURE	ASCE 7-10 SECTION 1.4
DESIGN BASE SHEAR, V	0.01 x W
WIND - PARAMETERS	
BASIC WIND SPEED	120 MPH
EXPOSURE CLASS	C
WIND - MAIN WIND FORCE RESISTING SYSTEM PRESSURES	
DESIGN PRESSURE	33 PSF
ROOF UPLIFT PRESSURE	25 PSF (GROSS) [LC: 1.0WL]
ROOF UPLIFT PRESSURE	10 PSF (NET) [LC: 0.9DL + 1.0 WL]
WIND - ELEMENTS AND COMPONENTS	
PER APPLICABLE BUILDING CODE	
LIVE LOADS	
CORRIDOR AND PUBLIC SPACE	100 PSF UNREDUCIBLE
MECHANICAL	125 PSF UNREDUCIBLE
STAIRS	100 PSF UNREDUCIBLE
STORAGE	125 PSF UNREDUCIBLE
PHOTOVOLTAIC PANELS	10 PSF UNREDUCIBLE
SNOW LOADS	
GROUND SNOW LOAD	30 PSF
SNOW EXPOSURE FACTOR	1.0
THERMAL FACTOR	1.0
IMPORTANCE FACTOR	1.2
FLAT-ROOF SNOW LOAD	24 PSF
DESIGN LOAD	25 PSF

3. NET ALLOWABLE SOIL BEARING PRESSURES WITH AGGREGATE PIERS
SPREAD FOOTINGS 4000 PSF
CONTINUOUS FOOTINGS 4000 PSF

4. MINIMUM FROST PROTECTION DEPTH FROM ADJACENT GRADE:
EXTERIOR FOOTING ADJACENT TO HEATED AREA -4'-0"
EXTERIOR FOOTINGS IN UNHEATED AREA -4'-0"

5. SPECIFIED 28-DAY CONCRETE COMPRESSIVE STRENGTHS (f'c)
FOOTINGS 3000 PSI
FOUNDATION WALLS 4000 PSI
SLABS ON GRADE 4000 PSI
TYPICAL - UNLESS NOTED OTHERWISE 4000 PSI

6. CONCRETE REINFORCING STEEL SHALL BE HIGH STRENGTH NEW BILLET STEEL CONFORMING TO THE FOLLOWING STANDARDS:

DEFORMED BARS	ASTM A615, GRADE 60	Fy = 60 KSI
WELDED WIRE REINFORCING	ASTM A185	Fy = 65 KSI
PRESTRESSING STRAND, 1/2"Ø 7-WIRE LOW-RELAXATION	ASTM S416, GRADE 270	Fy = 270 KSI

7. MATERIALS FOR CONCRETE UNIT MASONRY SHALL CONFORM TO THE FOLLOWING STANDARDS:

CONCRETE MASONRY UNITS	ASTM C90
MORTAR MATERIALS	ASTM C270, TYPE S
GROUT FOR MASONRY	ASTM C476
REINFORCING STEEL FOR MASONRY	ASTM A615, GRADE 60 (UNO)
PLATE AND BENT BAR ANCHORS	ASTM A36
SHEET METAL ANCHORS AND TIES	ASTM A1008
WIRE MESH TIES	ASTM A185
WIRE TIES AND ANCHORS	ASTM A951
ANCHOR BOLTS FOR MASONRY	ASTM A307, GRADE A

8. MINIMUM 28 DAY COMPRESSIVE STRENGTHS FOR MASONRY (f'm):

DESIGN ASSEMBLY STRENGTH, f'm	2000 PSI
INDIVIDUAL CONCRETE MASONRY UNITS	2800 PSI
MORTAR FOR MASONRY (TYPE S REQUIRED)	1800 PSI
GROUT FOR MASONRY	2000 PSI

9. STRUCTURAL STEEL SHALL CONFORM TO THE FOLLOWING STANDARDS:

WIDE FLANGE SECTIONS	ASTM A992	Fy = 50 KSI
OTHER ROLLED SECTIONS	ASTM A36	Fy = 36 KSI
SQUARE AND RECTANGULAR HSS	ASTM A500, GR B	Fy = 46 KSI
CAP AND BASE PLATES	ASTM A36	Fy = 36 KSI
CONNECTION MATERIAL	ASTM A36	Fy = 36 KSI
STIFFENER PLATES	ASTM A36	Fy = 36 KSI
ANCHOR RODS	ASTM F1554, GR 36	Fy = 36 KSI
HIGH STRENGTH BOLTS	ASTM F3125, GRADE A325	120 KSI
HEAVY HEX NUTS	ASTM A563	
WASHERS	ASTM F436	
HEADED WELDED STEEL STUDS	ASTM A108, TYPE B	
ELECTRODES FOR ARC WELDING	AWS 5.1, E70XX	

10. STEEL DECK AND ALL ACCESSORIES SHALL BE FORMED FROM STEEL SHEETS CONFORMING TO THE FOLLOWING STANDARDS:
GALVANIZED STEEL ROOF DECK ASTM A653, GR 33 Fy = 33 KSI

12. STRUCTURAL THERMAL BREAK MATERIAL, BUSHINGS AND WASHERS SHALL CONFORM TO THE FOLLOWING MINIMUM STANDARDS:

COMPRESSIVE STRENGTH	ASTM D638	38,900 PSI
COMPRESSIVE MODULUS	ASTM D695	291,194 PSI
SHEAR STRENGTH	ASTM D732	15,000 PSI
THERMAL CONDUCTIVITY	ASTM C518	1.8 BTU IN/HR SF° F
COEFFICIENT OF THERMAL EXPANSION	ASTM E831	2.2 x 10E-6 IN/IN/°F
THERMAL RESISTANCE (R VALUE)	ASTM C518	0.95 HR SF °F/BTU
ACCEPTABLE MANUFACTURERS	ARMATHERM, FABREEKA OR OTHER PRE-APPROVED MANUFACTURER	

GENERAL NOTES

1. NEITHER THE PROFESSIONAL ACTIVITIES OF THE ENGINEER, NOR THE PRESENCE OF THE ENGINEER OR HIS OR HER EMPLOYEES AND SUBCONSULTANTS AT THE CONSTRUCTION SITE, SHALL RELIEVE THE CONTRACTOR AND ANY OTHER ENTITY OF THEIR OBLIGATIONS, DUTIES, AND RESPONSIBILITIES INCLUDING, BUT NOT LIMITED TO, CONSTRUCTION MEANS, METHODS, SEQUENCE, TECHNIQUES, OR PROCEDURES NECESSARY FOR PERFORMING, SUPERINTENDING, OR COORDINATING ALL PORTIONS OF THE WORK OF CONSTRUCTION IN ACCORDANCE WITH THE CONTRACT DOCUMENTS AND ANY HEALTH OR SAFETY PRECAUTIONS REQUIRED BY ANY REGULATORY AGENCIES. THE ENGINEER AND HIS OR HER PERSONNEL HAVE NO AUTHORITY TO EXERCISE ANY CONTROL OVER ANY CONSTRUCTION CONTRACTOR OR OTHER ENTITY OR THEIR EMPLOYEES IN CONNECTION WITH THEIR WORK OR ANY HEALTH OR SAFETY PRECAUTIONS. THE CONTRACTOR IS SOLELY RESPONSIBLE FOR THE JOBSITE SAFETY. THE ENGINEER AND THE ENGINEER'S CONSULTANTS SHALL BE MADE ADDITIONAL INSUREDS UNDER THE CONTRACTOR'S GENERAL LIABILITY INSURANCE POLICY.

2. STRUCTURAL DRAWINGS INCLUDE DESIGN REQUIREMENTS AND DIMENSIONS FOR STRUCTURAL INTEGRITY BUT DO NOT SHOW ALL DETAIL DIMENSIONS TO FIT INTRICATE ARCHITECTURAL AND MECHANICAL DETAILS. CONTRACTOR SHALL SO CONSTRUCT THE WORK SO THAT IT WILL CONFORM TO THE CLEARANCES REQUIRED BY ARCHITECTURAL, MECHANICAL AND ELECTRICAL DESIGN.

3. THE CONTRACT STRUCTURAL DRAWINGS AND SPECIFICATIONS REPRESENT THE FINISHED STRUCTURE. UNLESS NOTED OTHERWISE, THEY DO NOT INDICATE THE MEANS OR METHODS OF CONSTRUCTION.

4. DETAILS AND NOTES ON THE STRUCTURAL DRAWINGS ARE INTENDED TO BE TYPICAL FOR SIMILAR SITUATIONS ELSEWHERE.

5. ESTABLISH AND VERIFY ALL OPENINGS AND INSERTS FOR MECHANICAL, ELECTRICAL, AND PLUMBING WITH APPROPRIATE TRADE CONTRACTORS. OPENING SIZES AND LOCATIONS SHOWN FOR DUCTS, PIPES, INSERTS AND OTHER PENETRATIONS WHEN SHOWN ARE FOR GENERAL INFORMATION ONLY AND SHALL BE VERIFIED PRIOR TO FORMING.

6. DIMENSIONS, NOTES, AND DETAILS ON DRAWINGS SHALL TAKE PRECEDENCE OVER GENERAL NOTES AND TYPICAL DETAILS.

7. REFER TO ARCHITECTURAL DRAWINGS FOR THE FOLLOWING:
   A. SIZE AND LOCATION OF ALL DOOR AND WINDOW OPENINGS, UNLESS NOTED OTHERWISE.
   B. SIZE AND LOCATIONS OF ALL INTERIOR AND EXTERIOR MASONRY WALLS.
   C. SIZE AND LOCATION OF ALL CONCRETE CURBS, FLOOR DRAINS, SLOPES, DEPRESSED AREAS, CHANGES IN LEVEL, CHAMFERS, GROOVES, INSERTS, ETC.
   D. SIZE AND LOCATION OF ALL FLOOR AND ROOF OPENINGS UNLESS NOTED OTHERWISE.
   E. FLOOR, WALL AND ROOF FINISHES.
   F. STAIR FRAMING AND DETAILS. ALSO REFER TO STAIR MANUFACTURER'S APPROVED SHOP DRAWINGS.
   G. DIMENSIONS NOT SHOWN ON STRUCTURAL DRAWINGS.
   H. FIRE PROTECTION REQUIREMENTS.

8. REFER TO MECHANICAL, PLUMBING AND ELECTRICAL DRAWINGS FOR THE FOLLOWING:
   A. PIPE RUNS, SLEEVES, HANGERS, TRENCHES, WALL AND SLAB OPENINGS, ETC., EXCEPT AS SHOWN.
   B. ELECTRICAL CONDUIT RUNS, BOXES, OUTLETS IN WALLS AND SLABS.
   C. CONCRETE INSERTS FOR ELECTRICAL, MECHANICAL OR PLUMBING FIXTURES.
   D. SIZE AND LOCATION OF MACHINE OR EQUIPMENT BASES OR CURBS AND ANCHOR BOLTS FOR MOTOR MOUNTS.

10. BEFORE SUBMITTING A PROPOSAL FOR THIS WORK, EACH BIDDER SHALL VISIT THE PREMISES AND BECOME FULLY ACQUAINTED WITH THE EXISTING CONDITIONS, TEMPORARY CONSTRUCTION REQUIRED, QUANTITIES AND TYPES OF EQUIPMENT, ETC. THE BID SHALL INCLUDE ALL SUMS REQUIRED TO DO THE WORK WITHIN THE EXISTING CONDITIONS. DISRUPTION OF NORMAL ACTIVITIES IN THE WORK AREA SHALL BE KEPT TO A MINIMUM.

11. SHOP DRAWINGS PREPARED BY SUPPLIERS, SUBCONTRACTORS, AND OTHERS SHALL BE REVIEWED AND COORDINATED PRIOR TO SUBMITTING TO THE ARCHITECT. EACH SHOP DRAWING SUBMITTED SHALL BE STAMPED, INITIALED AND DATED INDICATING REVIEW BY THE CONSTRUCTION MANAGER/GENERAL CONTRACTOR.

12. SHOP DRAWINGS PREPARED BY THE SUBCONTRACTORS, SUPPLIERS, AND OTHERS SHALL BE REVIEWED BY THE ARCHITECT ONLY FOR GENERAL CONFORMANCE WITH DESIGN CONCEPT ONLY. REVIEW BY THE ARCHITECT SHALL NOT BEGIN WITHOUT THE PRIOR COORDINATION AND REVIEW BY THE GENERAL CONTRACTOR. WORK SHALL NOT BEGIN WITHOUT REVIEW BY THE ARCHITECT. NOTATIONS MADE BY THE ARCHITECT ON THE SHOP DRAWINGS DO NOT RELIEVE THE CONTRACTOR FROM COMPLYING WITH THE REQUIREMENTS OF THE DRAWINGS AND SPECIFICATIONS.

13. OPTIONS ARE FOR THE CONTRACTOR'S CONVENIENCE. CONTRACTOR SHALL BE RESPONSIBLE FOR ALL NECESSARY CHANGES RESULTING FROM CHOOSING AN OPTION AND SHALL COORDINATE ALL DETAILS. THE COST OF ADDITIONAL DESIGN WORK NECESSITATED BY SELECTION OF AN OPTION SHALL BE BORNE BY THE CONTRACTOR.

14. THE COST OF ADDITIONAL DESIGN WORK DUE TO ERRORS OR OMISSIONS BY THE CONTRACTOR IN CONSTRUCTION SHALL BE BORNE BY THE CONTRACTOR.

15. ANY ENGINEERING DESIGN PROVIDED BY OTHERS AND SUBMITTED FOR REVIEW OR RECORD SHALL BEAR THE STAMP AND SIGNATURE OF A PROFESSIONAL STRUCTURAL ENGINEER REGISTERED IN THE STATE OF WISCONSIN.

16. ELEVATIONS ARE BASED ON THE FIRST FLOOR ELEVATION OF (+ 0' - 0") WHICH IS EQUAL TO CIVIL ELEVATION OF (866.25').

FOUNDATIONS/SLAB-ON-GRADE

1. CROSS REFERENCE ARCHITECTURAL AND STRUCTURAL DRAWINGS TO ASSURE PROPER DIMENSIONS AND PLACEMENT OF ALL ANCHOR BOLTS, INSERTS, NOTCHES, EDGES IN GRADE BEAMS, FOUNDATION WALLS AND PIERS.

2. FOUNDATION DESIGN BASED ON GEOTECHNICAL ENGINEERING REPORT DATED JULY 13, 2017 AND SUPPLEMENTAL GEOTECHNICAL ENGINEERING REPORT DATED SEPTEMBER 26, 2017 BY CGC, INC. REPORTS ARE ON FILE WITH THE ARCHITECT.

3. ALL EXCAVATIONS SHALL BE PROPERLY AND SAFELY BACKFILLED. DO NOT PLACE BACKFILL BEHIND RETAINING WALLS BEFORE CONCRETE HAS ATTAINED SPECIFIED COMPRESSIVE STRENGTH. CONTRACTOR SHALL BRACE OR PROTECT ALL WALLS BELOW GRADE FROM LATERAL LOADS UNTIL SUPPORTING FLOOR IS COMPLETELY IN PLACE AND HAS ATTAINED FULL STRENGTH. CONTRACTOR SHALL PROVIDE FOR DESIGN, PERMITS, AND INSTALLATION OF SHORING AND/OR SHEETING. BACKFILLING IS NOT PERMITTED FOR FOUNDATION WALLS UNTIL SUPPORTED SLAB ABOVE IS IN PLACE OR THE WALL IS ADEQUATELY BRACED TO RESIST LATERAL LOADS.

4. UNLESS NOTED OTHERWISE, ALL FOOTINGS SHALL BE CENTERED UNDER WALLS, PIERS OR COLUMNS.

5. PROVIDE SAW CUT CONTROL JOINTS IN ALL SLABS-ON-GRADE. LOCATE JOINTS ALONG COLUMN LINES WITH INTERMEDIATE JOINTS SPACED PER THE TABLE BELOW, UNLESS NOTED OTHERWISE. CONTROL JOINTS SHALL BE CONTINUOUS, NOT STAGGERED OR OFFSET. SLAB PANELS SHALL HAVE A MAXIMUM LENGTH TO WIDTH RATIO OF 1.5 TO 1. PROVIDE ADDITIONAL CONTROL JOINTS AT ALL RE-ENTRANT CORNERS FORMED IN SLAB ON GRADE.

SLAB ON GRADE THICKNESS	MAX JOINT SPACING
4"	12'-0"
5"	15'-0"
6"	18'-0"
8"	24'-0"

STRUCTURAL STEEL

1. REFER TO DRAWINGS FOR DETAIL OF DECK OPENINGS. REFER TO ARCHITECTURAL MECHANICAL, ELECTRICAL DRAWINGS, ETC., FOR EXACT SIZE, LOCATION, AND COUNT OF REQUIRED OPENINGS.

2. UNLESS NOTED OTHERWISE ALL WELDS SHALL BE CONTINUOUS 1/4" FILLET WELDS.

3. HIGH STRENGTH BOLTS SHALL BE INSTALLED IN ACCORDANCE WITH AISC "SPECIFICATIONS FOR STRUCTURAL JOINTS USING HIGH-STRENGTH BOLTS." SEE DESIGN CRITERIA FOR BOLT SIZE AND MATERIAL ASTM DESIGNATION.

4. BOLTS IN SLOTTED HOLES SHALL BE LOCATED IN THE CENTER OF THE HOLE AFTER FIELD ASSEMBLY IS COMPLETE, UNLESS DETAILED OTHERWISE.

5. USE BACKING FOR ALL FULL PENETRATION WELDS. ALL FULL AND/OR PARTIAL PENETRATION WELDS SHALL BE FULLY DETAILED ON THE SHOP DRAWINGS.

6. ALL LATERAL LOAD RESISTANCE AND STABILITY OF THE BUILDING IN THE COMPLETED STRUCTURE IS PROVIDED BY REINFORCED MASONRY SHEAR WALLS (SEE PLAN SHEETS FOR LOCATIONS). THESE PROVIDE ALL LATERAL LOAD RESISTANCE IN EACH ORTHOGONAL BUILDING DIRECTION. THE STEEL DECK AND HOLLOW CORE SLABS SERVE AS HORIZONTAL DIAPHRAGMS THAT DISTRIBUTE THE LATERAL WIND AND SEISMIC FORCES HORIZONTALLY TO THE VERTICAL LATERAL SHEAR WALLS. THE MASONRY SHEAR WALLS CARRY THE APPLIED LATERAL LOADS TO THE BUILDING FOUNDATION.

STEEL JOISTS

1. DESIGN, FABRICATION AND ERECTION SHALL BE IN ACCORDANCE WITH THE LATEST EDITION OF THE STEEL JOIST INSTITUTE (SJI) SPECIFICATION BY A MEMBER OF THE SJI APPROVED FOR THE TYPE OF JOIST BEING USED.

2. PROVIDE BRIDGING PER SJI SPECIFICATIONS. DESIGN AND PROVIDE UPLIFT BRIDGING TO WITHSTAND A NET UPLIFT PRESSURE AS INDICATED WITHIN DESIGN CRITERIA. WHERE BRIDGING INTERFERES WITH MECHANICAL OR OTHER TRADES INSTALLATIONS, THE FABRICATOR SHALL REMOVE THE BRIDGING AFTER THE METAL DECK IS IN PLACE AND REPLACE AS DIRECTED BY THE STRUCTURAL ENGINEER THROUGH THE ARCHITECT.

3. ERECTOR SHALL FOLLOW MANUFACTURER'S AND STEEL JOIST INSTITUTES GUIDELINES FOR ERECTIONS STABILITY AND HANDLING.

4. ATTACH STEEL JOIST TO SUPPORT PER THE FOLLOWING SCHEDULE. WHERE WELDS ARE INDICATED ON THE DETAILS, WELD TO BE INSTALLED ON BOTH SIDES OF JOIST SEAT.

	DETAILS WITH WELD INFORMATION		DETAILS WITH BOLT INFORMATION		MINIMUM END BEARING	
JOIST SERIES	WELD SIZE	WELD LENGTH	BOLT DIAMETER	BOLT MATERIAL	STEEL	MASONRY
K	1/8"	2"	1/2"	A307	2 1/2"	4"
DLHSP	1/4"	4"	3/4"	A325	6"	6"

REINFORCING STEEL

1. FOR CAST-IN-PLACE CONCRETE THE FOLLOWING MINIMUM CONCRETE COVER SHALL BE PROVIDED FOR REINFORCEMENT UNLESS NOTED OTHERWISE:

CONCRETE CAST AGAINST AND PERMANENTLY EXPOSED TO EARTH 3 INCHES

CONCRETE EXPOSED TO EARTH OR WEATHER
NO. 6 BARS OR LARGER 2 INCHES
NO. 5 BARS OR SMALLER 1 1/2 INCHES

2. DIMENSIONS OF CONCRETE COVER FOR REINFORCEMENT INDICATED ON DRAWINGS ARE TO OUTERMOST REINFORCING BARS. FOR BEAMS OR COLUMNS WITH STIRRUPS OR TIES, CLEAR COVER INDICATED IS TO STIRRUPS OR TIES.

3. BAR SPLICES: SPLICE REINFORCING WHERE INDICATED ON THE DRAWINGS. ALL SPLICES SHALL BE CLASS 'B' AS DEFINED IN ACI 318. IF SPLICE LENGTH IS NOT GIVEN ON THE DRAWINGS, PROVIDE LAP LENGTHS (IN INCHES) AS FOLLOWS:

	3000 PSI CONCRETE		4000 PSI CONCRETE	
BAR SIZE	OTHER	TOP	OTHER	TOP
#3	22	28	19	25
#4	29	38	25	33
#5	36	47	31	41
#6	43	56	37	49
#7	63	81	54	71
#8	72	93	62	81
#9	81	105	70	91
#10	91	118	79	102
#11	101	131	87	114

LAP LENGTHS ASSUME CLEAR SPACING BETWEEN BARS OF 2 BAR DIAMETERS, AND A MINIMUM COVER OF 1 BAR DIAMETER. FOR DEVELOPMENT LENGTHS, DIVIDE BY 1.3. TOP BARS ARE DEFINED AS HORIZONTAL BARS WITH MORE THAN 1'-0" OF FRESH CONCRETE BELOW.

AGGREGATE PIERS

1. THE AGGREAGATE PIER (AP) SYSTEM SUPPLIED SHOULD BE DESIGNED FOR THE BEARING CAPACITY INDICATED BASED ON SITE CONDITIONS.

2. THE (AP) FOUNDATION SYSTEM DESIGN SHALL BE STAMPED AND SEALED BY A PROFESSIONAL ENGINEER LICENSED IN THE STATE OF WISCONSIN.

3. AGGREGATE PIERS REFERENCED IN THESE DRAWINGS REFER TO BOTH RAMMED PIERS AND VIBRO STONE COLUMNS.

STEEL DECK

1. DECK SIZE AND GAGE INDICATED IN THE DRAWINGS ARE BASED ON THE FOLLOWING:
   A. VULCRAFT 2008 CATALOG FOR GRAVITY DESIGN LOADS AND UNSHORED CONSTRUCTION SPANS.
   B. STEEL DECK INSTITUTE (SDI) DIAPHRAGM DESIGN MANUAL 3RD EDITION FOR DIAPHRAGM LOADS.
   C. EPICORE CATALOG FOR GRAVITY DESIGN LOADS AND UNSHORED CONSTRUCTION SPANS.
   D. EPIC METAL CORPORATION 2009 MANUAL FOR DIAPHRAGM LOADS.

2. STEEL ROOF DECK GALVANIZING SHALL CONFORM TO ASTM A653 WITH A MINIMUM COATING OF G60.

3. UNLESS NOTED OTHERWISE, DECK SHALL BE FASTENED WITH 5/8" DIAMETER PUDDLE WELDS AT 12" OC AT ALL SUPPORTS AND EDGES. SIDE LAPS SHALL BE FASTENED WITH #10 TEK SCREWS, MINIMUM ONE AT EACH MIDSPAN. OPENING EDGES SHALL RECEIVE THE SAME WELDING AS REQUIRED AT DECK ENDS. ALL WELDING SHALL BE PERFORMED BY CERTIFIED WELDERS EXPERIENCED IN COLD-FORMED STEEL DECK WORK.

4. PROVIDE 16 GAGE WELD WASHERS AT PUDDLE WELD CONNECTIONS TO 24 GAGE AND LIGHTER STEEL DECKS.

5. DO NOT EXCEED 25 LBS PER HANGER AND A MINIMUM SPACING OF 2'-0" ON CENTER WHEN ATTACHING TO STEEL ROOF DECKING (LIMITATION NOT REQUIRED WITH CONCRETE ON STEEL DECK). THIS 25 LBS LOAD AND 2'-0" SPACING INCLUDES ADJACENT MECHANICAL, ELECTRICAL, AND ARCHITECTURAL ITEMS HANGING FROM DECK. IF THE HANGER RESTRICTIONS CANNOT BE ACHIEVED, SUPPLEMENTAL FRAMING SUPPORTED OFF STEEL FRAMING WILL NEED TO BE ADDED. THE GENERAL CONTRACTOR IS RESPONSIBLE FOR COORDINATING LOCATION AND WEIGHT OF ALL THE ELEMENTS BEING HUNG.

6. USE SUMP PANS AT ALL ROOF DRAINS. MINIMUM THICKNESS FOR SUMP PANS SHALL BE 14 GAGE.

MASONRY (CONCRETE MASONRY UNITS)

1. MORTAR SHALL CONFORM TO AMERICAN SOCIETY FOR TESTING AND MATERIALS (ASTM) DESIGNATION CITED UNDER DESIGN CRITERIA, AND PROJECT SPECIFICATIONS. REFER TO DESIGN CRITERIA FOR MINIMUM COMPRESSIVE STRENGTH OF MORTAR.

2. REFER TO ARCHITECTURAL DRAWINGS FOR SURFACE AND HEIGHT OF UNITS, LAYING PATTERN AND JOINT TYPE. ALL BLOCK SHALL BE RUNNING BOND UNLESS NOTED OTHERWISE.

3. THE LOAD BEARING CONCRETE MASONRY WALLS FOR THIS PROJECT WERE DESIGNED TO SPAN VERTICALLY AND BE BRACED BY THE ROOF AND FLOOR FRAMING ELEMENTS OF THE STRUCTURE. DURING CONSTRUCTION THE MASONRY CONTRACTOR SHALL PROVIDE LATERAL BRACING UNTIL THE ROOF STRUCTURE IS INSTALLED AS RECOMMENDED BY ACI 530 AND THE LATEST REVISION OF "STANDARD PRACTICE FOR BRACING MASONRY WALLS UNDER CONSTRUCTION", PREPARED BY THE COUNCIL FOR MASONRY WALL BRACING. THIS BRACING IS TO PREVENT UNNECESSARY STRESS OR DAMAGE TO THE MASONRY WALLS FROM WIND LOADS, WHICH CAN OCCUR WHILE THE WALLS ARE NOT PROPERLY BRACED BY THE ROOF AND FLOOR STRUCTURE.

4. BAR SPLICES. SPLICE REINFORCING WHERE INDICATED ON THE DRAWINGS. IF SPLICE LENGTH IS NOT GIVEN ON THE DRAWINGS PROVIDE LAP LENGTHS (IN INCHES) AS FOLLOWS. BARS LARGER THAN #9 ARE TO BE MECHANICALLY SPLICED.

MINIMUM LAP SPLICE LENGTH	
BAR SIZE	LAP LENGTH
#3	27
#4	36
#5	45
#6	54
#7	63
#8	72
#9	82

LINTELS

1. PROVIDE LINTELS OVER ALL OPENINGS AND RECESSES IN MASONRY CONSTRUCTION.

2. THE STRUCTURAL DOCUMENTS REFLECT THE BEST ATTEMPT TO IDENTIFY ALL WALL PENETRATIONS IN THE NEW CONSTRUCTION. PENETRATIONS NOT IDENTIFIED ON THE DOCUMENTS ARE TO BE TREATED IN A MANNER SIMILAR TO THE IDENTIFIED LOCATIONS. LINTELS IN NON-BEARING MASONRY WALL OPENINGS CAN BE SIZED IN ACCORDANCE WITH THE NOTE BELOW. BOTTOM PLATE SIZE SHALL BE A MINIMUM OF 3/8" THICK. THE WIDTH OF THE PLATE SHALL BE 3/4" LESS THAN THE FIELD VERIFIED WALL THICKNESS. THE PLATE SHALL BE THE FULL LENGTH OF THE LINTEL MEMBER. LINTELS ARE NOT REQUIRED OVER OPENINGS THAT ARE 12" WIDE OR LESS AND AT LEAST 1 COURSE BELOW THE TOP OF THE WALL.

3. ALL LINTELS SHALL HAVE A MINIMUM OF 8" END BEARING.

4. ALL LINTELS IN EXTERIOR WALL CONSTRUCTION SHALL BE HOT-DIP GALVANIZED, UNO.

5. FOR ALL OPENINGS NOT OTHERWISE DETAILED OR SCHEDULED, MINIMUM LINTELS SHALL BE:

SPAN	STEEL OPTION (FOR EACH 4-INCH OF MASONRY WIDTH)	MASONRY OPTION		
		6" CMU	8" CMU	12" CMU
0 TO 2'-0"	5/16" PLATE (3/4" LESS THAN WALL WIDTH)	8" DEEP BOND BEAM WITH (1) #4	8" DEEP BOND BEAM WITH (1) #4	8" DEEP BOND BEAM WITH (2) #5
2'-0" TO 4'-0"	L3 1/2x3 1/2x1/4	8" DEEP BOND BEAM WITH (1) #4	8" DEEP BOND BEAM WITH (1) #4	8" DEEP BOND BEAM WITH (2) #5
4'-0" TO 6'-0"	L4x3 1/2x5/16 (LLV)	12" DEEP BOND BEAM WITH (1) #4	12" DEEP BOND BEAM WITH (1) #5	12" DEEP BOND BEAM WITH (2) #5
6'-0" TO 8'-0"	L5x3 1/2x5/16 (LLV)	12" DEEP BOND BEAM WITH (1) #5	12" DEEP BOND BEAM WITH (2) #5	12" DEEP BOND BEAM WITH (2) #5
8'-0" TO 10'-0"	L6x3 1/2x3/8 (LLV)	16" DEEP BOND BEAM WITH (1) #5	16" DEEP BOND BEAM WITH (2) #5	16" DEEP BOND BEAM WITH (2) #5

ALL ANGLES THAT ARE BACK TO BACK SHALL BE WELDED TOP AND BOTTOM 3" AT 12" MINIMUM.

6. BEARING PLATES NOT REQUIRED FOR LINTELS UNLESS NOTED OTHERWISE.

POST INSTALLED ANCHORS

1. POST INSTALLED EXPANSION ANCHORS SERVING AS THE BASIS OF DESIGN ARE SHOWN ON THE DRAWINGS. ACCEPTABLE ALTERNATE ANCHORS MAY BE SUPPLIED PROVIDED THAT THE QUANTITY AND CONFIGURATION MATCHES THE CAPACITY OF THE DESIGN ANCHOR QUANTITY AND CONFIGURATION. ANY ACCEPTABLE ALTERNATES ARE TO BE SUBMITTED TO THE STRUCTURAL ENGINEER FOR REVIEW. INSTALL IN ACCORDANCE WITH MANUFACTURER'S WRITTEN INSTRUCTIONS. THE FOLLOWING TABLE SUMMARIZES THE EXPANSION ANCHORS USED ON THE PROJECT:

ANCHORED INTO:	BASIS OF DESIGN	ACCEPTABLE ALTERNATES AT CONTRACTOR'S OPTION
GROUTED MASONRY	HILTI KWIK BOLT 3	DEWALT/POWERS POWER STUD+ SD1 SIMPSON WEDGE-ALL
CONCRETE	HILTI KWIK BOLT 3	DEWALT/POWERS POWER STUD+ SD2 ITW/RED HEAD TRUBOLT+ SIMPSON STRONG BOLT 2

2. POST INSTALLED THREADED ANCHORS SERVING AS THE BASIS OF DESIGN ARE SHOWN ON THE DRAWINGS. ACCEPTABLE ALTERNATE ANCHORS MAY BE SUPPLIED PROVIDED THAT THE QUANTITY AND CONFIGURATION MATCHES THE CAPACITY OF THE DESIGN ANCHOR QUANTITY AND CONFIGURATION. ANY ACCEPTABLE ALTERNATES ARE TO BE SUBMITTED TO THE STRUCTURAL ENGINEER FOR REVIEW. INSTALL IN ACCORDANCE WITH MANUFACTURER'S WRITTEN INSTRUCTIONS. THE FOLLOWING TABLE SUMMARIZES THE THREADED ANCHORS USED ON THE PROJECT:

ANCHORED INTO:	BASIS OF DESIGN	ACCEPTABLE ALTERNATES AT CONTRACTOR'S OPTION
GROUTED MASONRY	HILTI KWIK HUS	DEWALT/POWERS SCREW-BOLT+ SIMPSON TITEN HD
CONCRETE	HILTI KWIK HUS	DEWALT/POWERS SCREW-BOLT+ SIMPSON TITEN HD

3. ADHESIVE ANCHOR SYSTEMS FOR ATTACHMENT INTO CONCRETE SHALL CONSIST OF DEFORMED REINFORCING BARS OR ASTM A193 GRADE B7 RODS, HEAVY DUTY NUTS AND WASHERS, AND A TWO COMPONENT STRUCTURAL ADHESIVE. ADHESIVE ANCHORING SYSTEMS SERVING AS THE BASIS OF DESIGN ARE SHOWN ON THE DRAWINGS. ACCEPTABLE ALTERNATE ANCHORS MAY BE SUPPLIED PROVIDED THAT THE QUANTITY AND CONFIGURATION MATCHES THE CAPACITY OF THE DESIGN ANCHOR QUANTITY AND CONFIGURATION. ANY ACCEPTABLE ALTERNATES ARE TO BE SUBMITTED TO THE STRUCTURAL ENGINEER FOR REVIEW. INSTALL IN ACCORDANCE WITH MANUFACTURER'S WRITTEN INSTRUCTIONS. ANCHORING SYSTEMS INTO HOLLOW CMU SHALL INCLUDE A SCREEN TUBE. THE FOLLOWING TABLE SUMMARIZES THE ADHESIVE ANCHORS USED ON THE PROJECT:

ANCHORED INTO:	BASIS OF DESIGN	ACCEPTABLE ALTERNATES AT CONTRACTOR'S OPTION
HOLLOW MASONRY	HILTI HIT-HY 70	DEWALT/POWERS AC 100+ GOLD ITW A7 ACRYLIC
GROUTED MASONRY	HILTI HIT-HY 70	DEWALT/POWERS AC 100+ GOLD ITW A7 ACRYLIC SIMPSON SET
CONCRETE	HILTI HIT-HY 200	DEWALT/POWERS AC 200+ SIMPSON SET XP

PRESTRESSED /PRECAST CONCRETE

1. PRECAST MEMBERS SHALL BE DESIGNED FOR ALL LOADING CONDITIONS REQUIRED BY THE GOVERNING BUILDING CODES IN ADDITION TO ANY SPECIFIC LOADINGS SHOWN ON THE DRAWINGS.

2. ALL TOPPING SLABS SHALL NOT BE COMPOSITE WITH HOLLOW CORE SLABS, UNLESS NOTED OTHERWISE.

STEEL HELICAL PILES

1. STEEL HELICAL PILES SHALL BE ACCURATELY CENTERED AT THE PROPER LOCATIONS AND INSTALLED PLUMB. INSTALL TO THE FOLLOWING TOLERANCES: PILE CENTER WITHIN 3" LATERALLY AND 1/2" VERTICALLY FROM SPECIFIED LOCATION AND ELEVATION, AND SHAFT ALIGNMENT WITHIN 1 DEGREE OF SPECIFIED ANGLE.

2. INSPECTION AGENCY SHALL KEEP A RECORD OR LOG OF EACH PILE AS INSTALLED SHOWING LOCATION, TOP AND BOTTOM ELEVATIONS, DIAMETERS, DATE INSTALLED, TYPE OF STRATA ENCOUNTERED AND ANY OTHER PERTINENT INFORMATION.

3. PILE DESIGN SHALL BE DESIGNED TO MEET THE SPECIFIED LOADING AS SHOWN ON PLAN AND THE DEFLECTION CRITERIA OF 1/2" DIFFERENTIAL AND 1" TOTAL SETTLEMENTS.

4. HELICAL PILE CONTRACTOR SHALL SUBMIT DESIGN CALCULATIONS AND SHOP DRAWINGS STAMPED AND CERTIFIED BY A LICENSED ENGINEER IN THE STATE WHERE THE PROJECT IS LOCATED. SHOP DRAWINGS SHALL BE SUBMITTED FOR REVIEW BY THE ARCHITECT/ENGINEER AND SHALL INCLUDE HELICAL PILE COMPONENTS, CORROSION PROTECTION SYSTEM, PILE TOP ATTACHMENT AND HELIX DETAILS.

STRUCTURAL ABBREVIATIONS LIST

#	NUMBER
@	AT
°	DEGREES
Ø	DIAMETER
AHU	AIR-HANDLING UNIT
APPROX	APPROXIMATE, -LY
ARCH	ARCHITECT, -URE, -LY
B.O.	BOTTOM OF
bf	BEAM FLANGE WIDTH
BM	BEAM
BP	BASE PLATE
BRG	BEARING
CFSF	COLD FORM STEEL FRAMING
CJ	CONTROL JOINT
CL	CLEAR
CMU	CONCRETE MASONRY UNIT
CONC	CONCRETE
CONST	CONSTRUCTION
CONT	CONTINUOUS
D	DEPTH
DBL	DOUBLE
DEG	DEGREE
DIM	DIMENSION
DL	DEAD LOAD
DTL	DETAIL
DWG	DRAWING
EA	EACH
EF	EACH FACE
EJ	EXPANSION JOINT
EL	ELEVATION
ELEC	ELECTRICAL
EMBED	EMBEDDED
EOD	EDGE OF DECK
EOS	EDGE OF SLAB
EQ	EQUAL
EQUIP	EQUIPMENT
EW	EACH WAY
EXIST, (E)	EXISTING
EXP	EXPANSION
EXT	EXTERIOR
f'c	CONCRETE COMPRESSIVE STRENGTH
FDN	FOUNDATION
FIN	FINISHED
FL	FLOOR
FT	FOOT
FTG	FOOTING
Fy	YIELD STRESS
GA	GAGE OR GAUGE
GALV	GALVANIZED
GB	GRADE BEAM
GC	GENERAL CONTRACTOR
GYP	GYPSUM
HDG	HOT-DIPPED GALVANIZED
HORIZ	HORIZONTAL
HVAC	HEATING, VENTILATION, AIR CONDITIONING
HWS	HEADED, WELDED STUD
IN	INCH
INT	INTERIOR
JST	JOIST
JT	JOINT
K, KIP	KILOPOUND (1,000 POUNDS)
KO	KNOCK-OUT
KSF	KIPS PER SQUARE FOOT
L	LENGTH
LB	POUND
LF	LINEAR FOOT
LL	LIVE LOAD
LLH	LONG LEG HORIZONTAL
LLV	LONG LEG VERTICAL
LSH	LONG SIDE HORIZONTAL
LSV	LONG SIDE VERTICAL
LONG	LONGITUDINAL
M/E	MECHANICAL/ELECTICAL
MAX	MAXIMUM
MECH	MECHANICAL
MEZZ	MEZZANINE
MIN	MINIMUM
MISC	MISCELLANEOUS
MK	MARK
N	NORTH
N	LENGTH (AS PLATES)
NIC	NOT IN CONTRACT
NO	NUMBER
NTS	NOT TO SCALE
OC	ON CENTER
OPNG	OPENING
OPP	OPPOSITE
PAF	POWER ACTUATED FASTENER
PC	PRECAST
PCF	POUNDS PER CUBIC FOOT
PL	PLATE
PSF	POUNDS PER SQARE FOOT
PSI	POUNDS PER SQUARE INCH
PVC	POLYVINYL CHLORIDE
R	RADIUS
RD	ROOF DRAIN
REINF	REINFORCING, -MENT, -ED
REQ'D	REQUIRED
REF	REFERENCE, REFER TO
RTU	ROOF-TOP UNIT
SC	TC WITH CLASS A FAYING SURFACE
SCHED	SCHEDULE
SIM	SIMILAR
SL	SNOW LOAD
SP	SPACE(S)
SPEC	SPECIFICATION(S)
SPEC'D	SPECIFIED
SQ	SQUARE
STD	STANDARD
STIFF	STIFFENER
T.O.	TOP OF
TC	PRE-TENSIONED BOLT
TEMP	TEMPERATURE
tf	BEAM FLANGE THICKNESS
TRANS	TRANSVERSE
TYP	TYPICAL
UNO	UNLESS NOTED OTHERWISE
VERT	VERTICAL
VIF	VERIFY IN FIELD
VWA	VERIFY WITH ARCHITECTURAL DRAWINGS
WP	WORKING POINT
WT	WEIGHT
WWR	WELDED WIRE REINFORCING
YD	YARD

STRUCTURAL DRAWING SYMBOLS

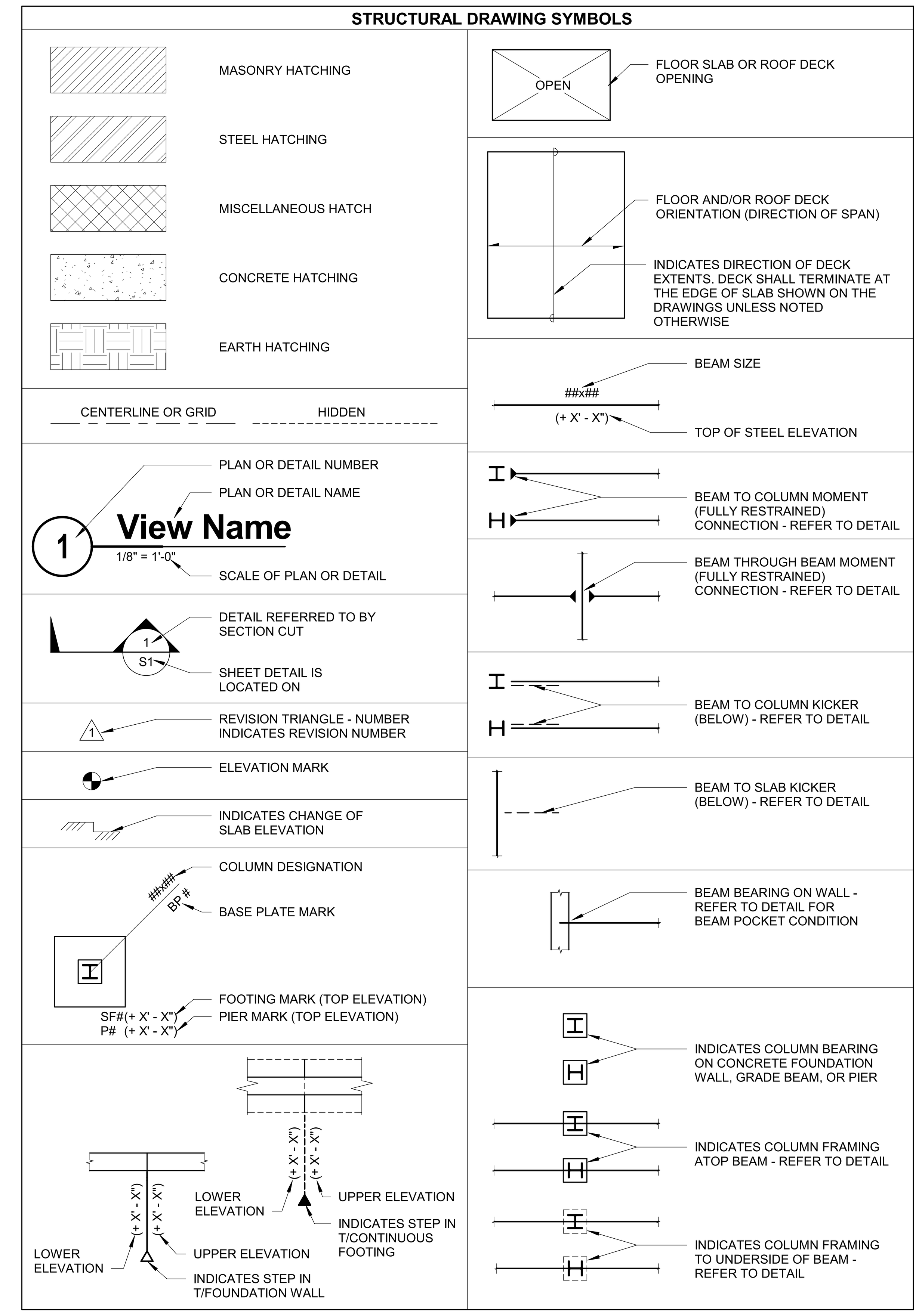

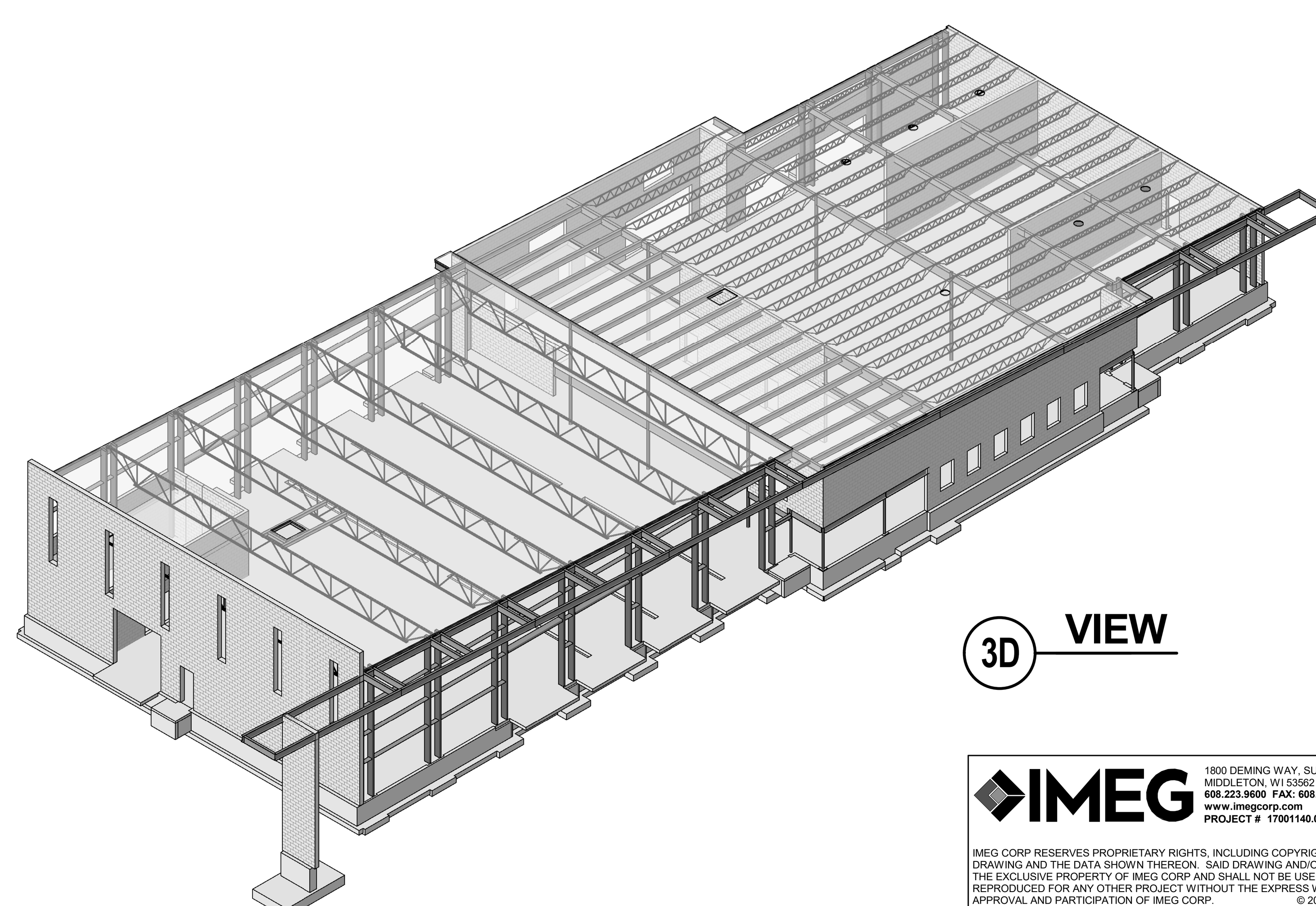

3D VIEW

IMEG
1800 DEMING WAY, SUITE 200
MIDDLETON, WI 53562
608.223.9600 FAX: 608.836.0415
www.imegcorp.com
PROJECT # 17001140.00

IMEG CORP RESERVES PROPRIETARY RIGHTS, INCLUDING COPYRIGHTS, TO THIS DRAWING AND THE DATA SHOWN THEREON. SAID DRAWING AND/OR DATA ARE THE EXCLUSIVE PROPERTY OF IMEG CORP AND SHALL NOT BE USED OR REPRODUCED FOR ANY OTHER PROJECT WITHOUT THE EXPRESS WRITTEN APPROVAL AND PARTICIPATION OF IMEG CORP. © 2017 IMEG CORP.

REFERENCE SCALE IN INCHES
0 1 2 3

OPN ARCHITECTS
301 N BROOM STREET #100
MADISON, WI 53703
608-819-0260 PHONE
www.opnarchitects.com
opn@opnarchitects.com

All reports, plans, specifications, computer files, field data, notes and other documents and instruments prepared by OPN Architects, Inc. as instruments of service shall remain the property of OPN Architects, Inc. OPN Architects, Inc. shall retain all common law, statutory and other reserved rights, including the copyright thereto.

© 2017 OPN Architects, Inc.

Owner
City of Madison Fire Department
314 W. Dayton St.
Madison, WI 53703

Project
Madison Fire Station 14
3201 Dairy Drive
Madison, WI 53718

Civil Engineer
Snyder & Associates, Inc
5010 Voges Rd
Madison WI, 53718
P. 608-838-0444

Structural Engineer
IMEG
1800 Deming Way #200
Middleton, WI 53562
P. 608-223-9600

Mechanical Engineer
IMEG
1800 Deming Way #200
Middleton, WI 53562
P. 608-223-9600

Electrical Engineer
IMEG
1800 Deming Way #200
Middleton, WI 53562
P. 608-223-9600

Key Plan

Sheet Issue Date
BID DOCUMENTS 11/03/17

Revision Date

BID DOCUMENTS

Drawing
GENERAL NOTES

City of Madison Contract No. 8027
OPN Project No. 17207000

S001

PRINTED: 10/26/2017 4:45:10 PM

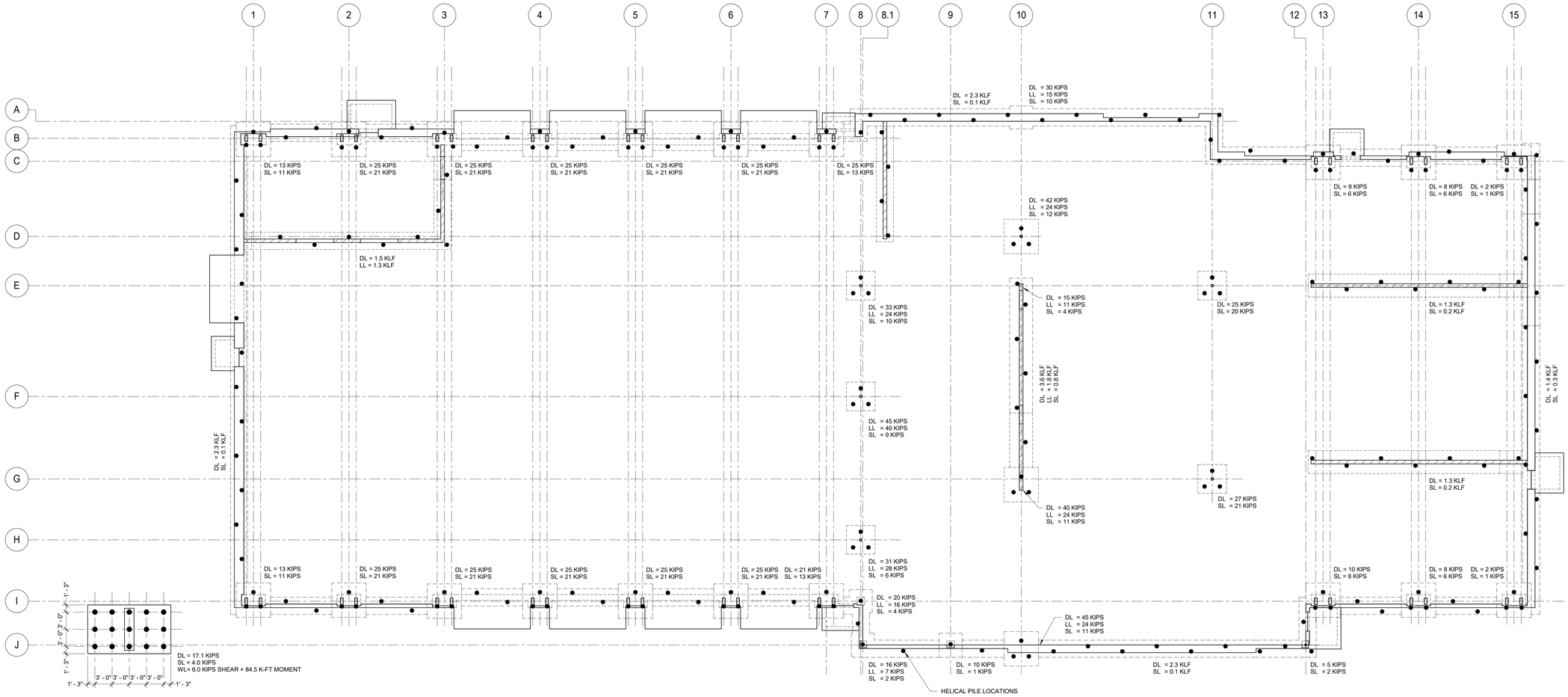

1 FOUNDATION LOADS AND HELICAL PILE LAYOUT

1/8" = 1'-0"

NOTES:

1. FOUNDATIONS TO BE SUPPORTED BY EITHER AGGREGATE PIERS OR STEEL HELICAL PILES. GIVEN LOADS ARE UNFACTORED VERTICAL LOADS, UNO.
2. AGGREGATE PIERS:
   AGGREGATE PIER (AP) SIZE, QUANTITY, SPACING, AND DEPTH TO BE DETERMINED BY AP DESIGNER TO MEET FOUNDATION BEARING CAPACITIES SHOWN IN GENERAL NOTES. CONTACT A/E IF MODIFICATIONS TO FOOTING SIZES ARE REQUIRED. TOP OF AP EQUAL TO BOTTOM OF FOOTING. REFER TO DETAIL 2/S002.
3. HELICAL PILES:
   HELICAL PILE (HP) DESIGN SHALL MEET THE SPECIFIED LOADING AS SHOWN ON PLAN. FOR BIDDING PURPOSES, HP QUANTITY SHALL BE AS SHOWN ON PLAN AND DEPTH SHALL BE 50-FEET BELOW THE BOTTOM OF FOUNDATION ELEVATION. REFER TO DETAILS 3 AND 4/S002 FOR FOUNDATION DESIGN PARAMETERS. CONTINUOUS FOOTINGS DESIGNED FOR MAX HP SPACING OF 6'-0" OC, STAGGERED ALONG LENGTH OF FOOTING. CONTACT A/E IF MODIFICATIONS TO FOOTING SIZES ARE REQUIRED.

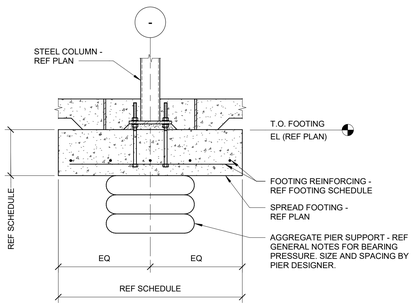

2 AGGREGATE PIER DETAIL

3/4" = 1'-0"

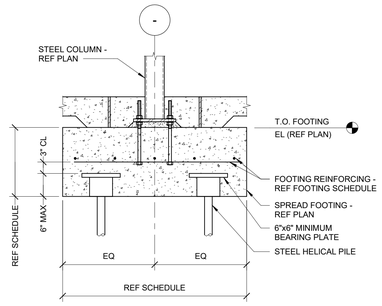

3 HELICAL PILE DETAIL

3/4" = 1'-0"

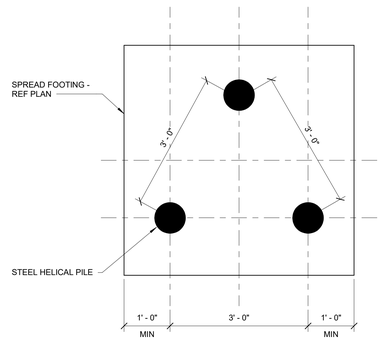

4 HELICAL PILE DETAIL

3/4" = 1'-0"

OPN ARCHITECTS

All reports, plans, specifications, computer files, field data, notes and other documents and instruments prepared by OPN Architects, Inc. as instruments of service shall remain the property of OPN Architects, Inc. OPN Architects, Inc. shall retain all common law, statutory and other reserved rights, including the copyright thereto.

© 2017 OPN Architects, Inc.

Owner

City of Madison Fire Department
314 W. Dayton St.
Madison, WI 53703

Project

Madison Fire Station 14
3201 Dairy Drive
Madison, WI 53718

Civil Engineer

Snyder & Associates, Inc
5010 Voges Rd
Madison WI, 53718
P. 608-838-0444

Structural Engineer

IMEG
1800 Deming Way #200
Middleton, WI 53562
P. 608-223-9600

Mechanical Engineer

IMEG
1800 Deming Way #200
Middleton, WI 53562
P. 608-223-9600

Electrical Engineer

IMEG
1800 Deming Way #200
Middleton, WI 53562
P. 608-223-9600

Key Plan

Sheet Issue Date	
BID DOCUMENTS	11/03/17

Revision	Date

BID DOCUMENTS

Drawing

FOUNDATION LOAD PLAN

City of Madison Contract No. **8027**
OPN Project No. **17207000**

S002

IMEG
1800 DEMING WAY, SUITE 200
MIDDLETON, WI 53562
608.223.9600 FAX: 608.836.0415
www.imegcorp.com
PROJECT # 170011400.00

IMEG CORP RESERVES PROPRIETARY RIGHTS, INCLUDING COPYRIGHTS, TO THIS DRAWING AND THE DATA SHOWN THEREON. SAID DRAWING AND/OR DATA ARE THE EXCLUSIVE PROPERTY OF IMEG CORP AND SHALL NOT BE USED OR REPRODUCED FOR ANY OTHER PURPOSE WITHOUT THE EXPRESS WRITTEN APPROVAL AND PARTICIPATION OF IMEG CORP. © 2017 IMEG CORP.

REFERENCE SCALE IN INCHES
0 1 2 3

PRINTED: 10/26/2017 4:45:12 PM

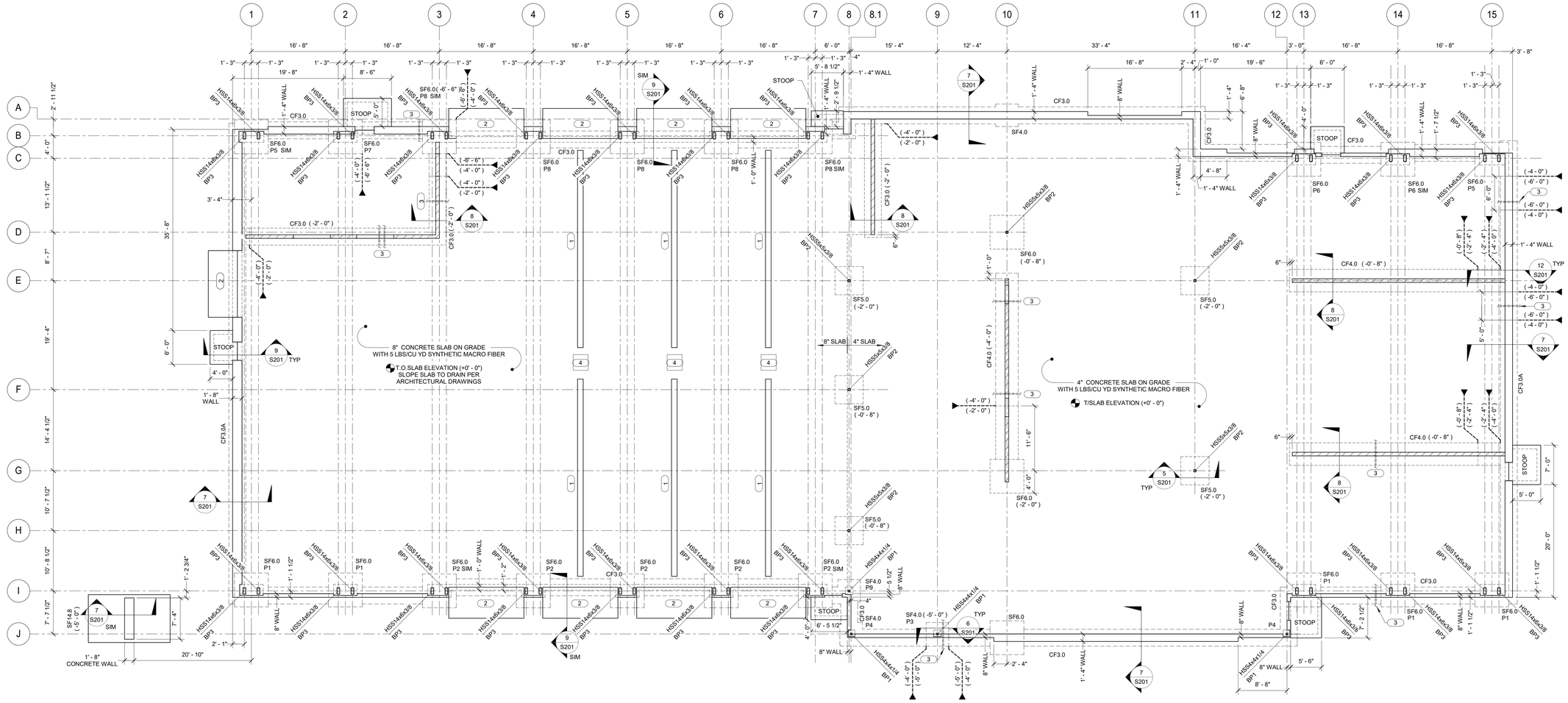

CONTINUOUS FOOTING SCHEDULE					
		THICKNESS		REINFORCING	
MARK	WIDTH	AGGREGATE PIERS	HELICAL PILES	LONG DIRECTION	SHORT DIRECTION
CF3.0	3' - 0"	1' - 0"		(3) #5	WALL DOWELS
CF3.0A	3' - 0"	1' - 0"	1' - 9"	(4) #5 AT BOTTOM & (3) #5 AT TOP	#5 @ 12" OC, BOTTOM
CF4.0	4' - 0"	1' - 0"	1' - 9"	(4) #5 TOP AND BOTTOM	#5 @12" OC, BOTTOM

SPREAD FOOTING SCHEDULE						
			THICKNESS		REINFORCING	
MARK	LENGTH	WIDTH	AGGREGATE PIERS	HELICAL PILES	LONG DIRECTION	SHORT DIRECTION
SF4.0	4' - 0"	4' - 0"	1' - 0"	1' - 9"	(4) #5	(4) #5
SF5.0	5' - 0"	5' - 0"	1' - 3"	1' - 9"	(6) #5	(6) #5
SF6.0	6' - 0"	6' - 0"	1' - 3"	1' - 9"	(6) #6	(6) #6
SF14.8	14' - 6"	8' - 6"	2' - 0"	2' - 9"	(8) #8 TOP AND BOTTOM	(14) #8

NOTES:

1. MAINTAIN MINIMUM DEPTH OF 4' - 0" FROM FINISH GRADE TO BOTTOM OF FOUNDATION WALL ELEVATION. STEP BOTTOM AS REQUIRED.

FOUNDATION WALL REINFORCING SCHEDULE				
WALL THICKNESS	VERTICALS		HORIZONTALS	
	INTERIOR FACE	EXTERIOR FACE	INTERIOR FACE	EXTERIOR FACE
8"	#4 @16" OC		#4 @12" OC	
1' - 0" TO 1' - 4"	#4 @16" OC	#4 @16" OC	#4 @12" OC	#4 @12" OC
1' - 8"	#4 @16" OC	#4 @16" OC	#5 @12" OC	#5 @12" OC

1 FOUNDATION PLAN

1/8" = 1'-0"

NOTES:

1. SF# AND CF# INDICATES SPREAD AND CONTINUOUS FOOTINGS. REFER TO THIS SHEET FOR SCHEDULES. TOP OF FOOTING ELEVATION (-4' - 0") UNO.
2. TOP OF FOUNDATION WALL ELEVATION (+0' - 0") UNO. REFER TO SCHEDULE THIS SHEET FOR REINFORCING.
3. P# INDICATES CONCRETE PIER. REFER TO S202 FOR DETAILS. TOP OF PIER ELEVATION (-0' - 8") UNO.
4. BP# INDICATES BASE PLATE. REFER TO S501 FOR ANCHOR ROD AND BASE PLATE DETAILS.
5. REFER TO 1, 2 AND 3/S201 FOR TYPICAL SLAB ON GRADE CONSTRUCTION DETAILS.
6. PROVIDE 2' - 6" x 2' - 6" CORNER BARS FOR FOOTING AND WALL INTERSECTIONS. BAR SIZE AND QUANTITY TO MATCH LONGITUDINAL AND HORIZONTAL BARS.
7. PROVIDE THICKENED SLAB AT ALL NON-STRUCTURAL MASONRY WALLS PER 11/S201.
8. ▶---- INDICATES FOOTING STEP. REFER TO 12 AND 13/S201 FOR FOOTING STEP DETAILS.

KEYNOTES:

1. TRENCH DRAIN. COORDINATE LOCATION AND SIZE WITH PLUMBING AND ARCHITECTURAL DRAWINGS. REFER TO 4/S201 FOR TRENCH DRAIN DETAIL.
2. SITE PAVING AT O.H. DOORS, REFER CIVIL DRAWINGS.
3. SLEEVE UTILITIES THROUGH FOUNDATION PER 10/S201. COORDINATE SIZE AND LOCATION WITH MECHANICAL AND PLUMBING CONTRACTORS.
4. IN-FLOOR CATCH BASIN. REFER TO PLUMBING DRAWINGS FOR ADDITIONAL INFORMATION.

OPN ARCHITECTS
301 N BROOM STREET #100
MADISON, WI 53703
608-819-0260 PHONE
www.opnarchitects.com
opn@opnarchitects.com

All reports, plans, specifications, computer files, field data, notes and other documents and instruments prepared by OPN Architects, Inc. as instruments of service shall remain the property of OPN Architects, Inc. OPN Architects, Inc. shall retain all common law, statutory and other reserved rights, including the copyright thereto.

© 2017 OPN Architects, Inc.

Owner
City of Madison Fire Department
314 W. Dayton St.
Madison, WI 53703

Project
Madison Fire Station 14
3201 Dairy Drive
Madison, WI 53718

Civil Engineer
Snyder & Associates, Inc
5010 Voges Rd
Madison WI, 53718
P. 608-838-0444

Structural Engineer
IMEG
1800 Deming Way #200
Middleton, WI 53562
P. 608-223-9600

Mechanical Engineer
IMEG
1800 Deming Way #200
Middleton, WI 53562
P. 608-223-9600

Electrical Engineer
IMEG
1800 Deming Way #200
Middleton, WI 53562
P. 608-223-9600

Key Plan

Sheet Issue Date
BID DOCUMENTS 11/03/17

Revision Date

BID DOCUMENTS

Drawing
FOUNDATION PLAN

City of Madison Contract No. **8027**
OPN Project No. **17207000**

S101

IMEG
1800 DEMING WAY, SUITE 200
MIDDLETON, WI 53562
608.223.9600 FAX: 608.836.0415
www.imegcorp.com
PROJECT # 170014I.00

IMEG CORP RESERVES PROPRIETARY RIGHTS, INCLUDING COPYRIGHTS, TO THIS DRAWING AND THE DATA SHOWN THEREON. SAID DRAWING AND/OR DATA ARE THE EXCLUSIVE PROPERTY OF IMEG CORP AND SHALL NOT BE USED OR REPRODUCED FOR ANY OTHER PROJECT WITHOUT THE EXPRESS WRITTEN APPROVAL AND PARTICIPATION OF IMEG CORP. © 2017 IMEG CORP.

REFERENCE SCALE IN INCHES
0 1 2 3

PRINTED: 10/26/2017 4:45:14 PM

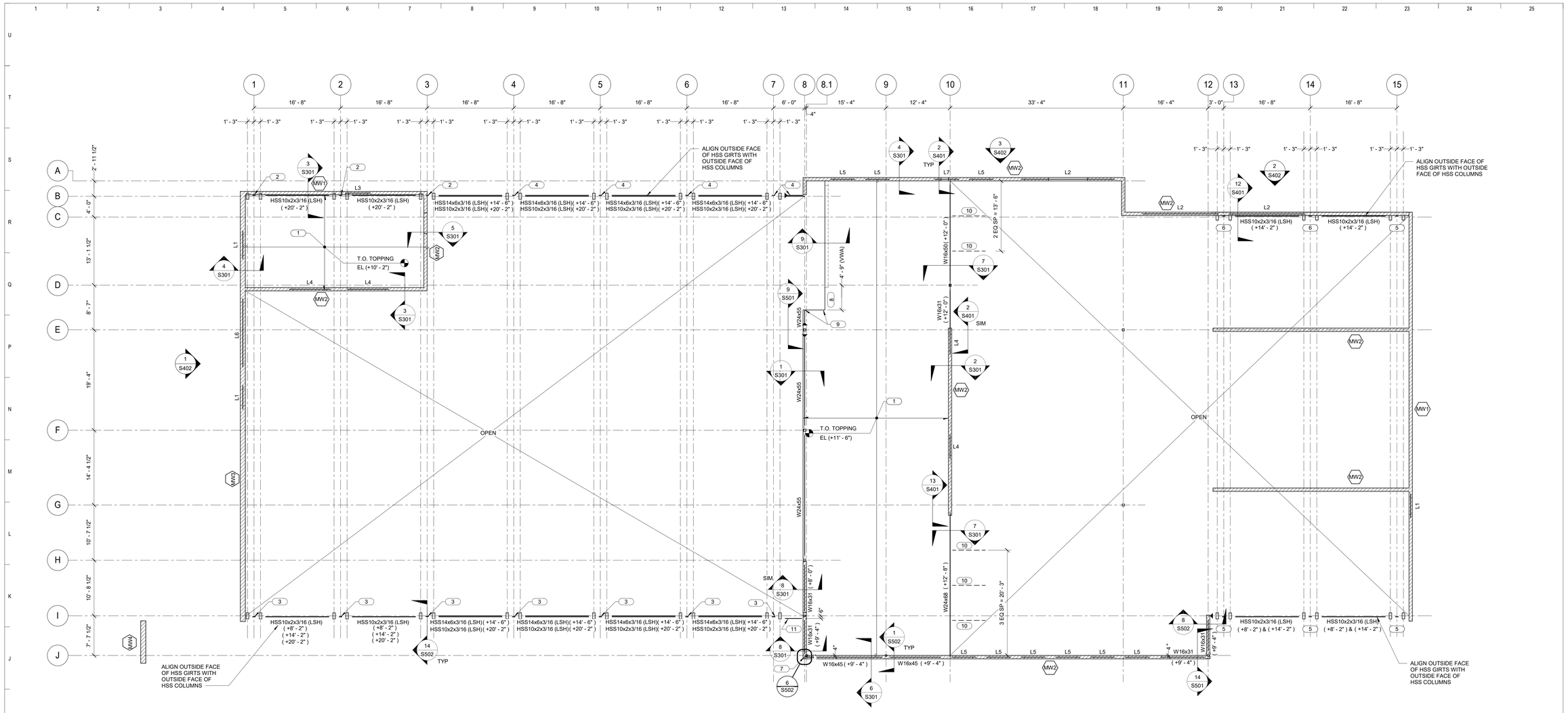

1 MEZZANINE FLOOR FRAMING PLAN - OVERALL

1/8" = 1'-0"

NOTES:

1. REFER TO 4 AND 5/S501 FOR TYPICAL SHEAR CONNECTION.
2. ▶ INDICATES MOMENT CONNECTION .
3. L# INDICATES LINTEL IN STRUCTURAL MASONRY WALL - REFER TO THIS SHEET FOR SCHEDULE.
4. FOR LINTEL IN NON-STRUCTURAL WALLS. REFER TO GENERAL NOTES FOR SCHEDULE.
5. PROVIDE BRACING BRACING OF NON-STRUCTURAL MASONRY PARTITION PER 5/S401.
6. (MW#) INDICATES MASONRY WALL - REFER TO THIS SHEET FOR SCHEDULE.

KEYNOTES:

1. 8" HOLLOW CORE SLAB WITH 2" NON-COMPOSITE TOPPING WITH 3 LBS/CU YD SYNTHETIC MACRO FIBER. REFER TO PLAN FOR TOP OF TOPPING ELEVATION. PRECASTER TO DESIGN FOR THE FOLLOWING LOADS: DL = 10 PSF (EXCLUDING TOPPING SELF-WEIGHT) AND LL = 125 PSF.
2. HSS10x2x3/16 (LSH) AT (+20' - 2").
3. HSS10x2x3/16 (LSH) AT (+8' - 2"), (+14' - 2") AND (+20' - 2").
4. HSS10x2x3/16 (LSH) AT (+14' - 2") AND (+20' - 2").
5. HSS10x2x3/16 (LSH) AT (+8' - 2") AND (+14' - 2").
6. HSS10x2x3/16 (LSH) AT (+14' - 2").
7. PROVIDE PLATE AT CORNER TO SUPPORT MASONRY WALL CONSTRUCTION. REFER TO DETAIL 9/S502.
8. HEADER FRAMING AT STAIR BY PRECAST SUPPLIER.
9. PRECASTER TO DESIGN FOR STAIR STRINGER LOADS: DL = 660 LBS, LL = 2,200 LBS.
10. L4x4x1/4 KICKER.
11. W8x24 (+8' - 8") WITH 1/2"Ø x 6" LONG HEADED WELDED STUDS @ 16" OC ON TOP FLANGE.

MASONRY LINTEL SCHEDULE

MARK	MEMBER BEARING, EACH END	MEMBER SIZE	REFERENCE DETAIL	NOTES
L1	0' - 8"	8" DEEP BOND BEAM WITH (2) #5 BARS	8/S401	-
L2	0' - 8"	W16x31 WITH 3/8" PLATE	10/S401	-
L3	0' - 8"	16" DEEP BOND BEAM WITH (2) #5 BARS	8/S401	-
L4	0' - 8"	16" DEEP BOND BEAM WITH (2) #5 BARS	9/S401	-
L5	0' - 8"	8" DEEP BOND BEAM WITH (2) #5 BARS	9/S401	-
L6	0' - 8"	24" DEEP BOND BEAM WITH (2) #5 BARS WITH L5x5x3/8	11/S401	-
L7	0' - 8"	W8x28	15/S401	-

MASONRY WALL REINFORCING SCHEDULE

MARK	WALL THICKNESS	VERTICAL WALL REINFORCING SIZE AND SPACING	HORIZONTAL WALL REINFORCING SIZE AND SPACING
MW1	8"	#5 @ 24" OC	TYPICAL @ 16" OC
MW2	8"	#5 @ 32" OC	TYPICAL @ 16" OC
MW3	12"	(2) #5 @ 24" OC	TYPICAL @ 16" OC
MW4	12"	(2) #8 @ 8" OC	TYPICAL @ 16" OC

NOTES:

1. TYPICAL HORIZONTAL REINFORCING IS AS PER SPECIFICATIONS. IT IS INTENDED TO BE A 'DUROWAL - TRUSS TYPE' OR EQUIVALENT.
2. REINFORCED CORES ARE ALWAYS GROUTED.
3. REFER TO 6/S401 FOR TYPICAL MASONRY OPENING DETAIL.
4. PROVIDE 2'-0" x 2'-0" CORNER BARS AT WALL INTERSECTIONS. BAR SIZE AND QUANTITY TO MATCH HORIZONTAL BOND BEAM BARS.

OPN ARCHITECTS
301 N BROOM STREET #100
MADISON, WI 53703
608-819-0260 PHONE
www.opnarchitects.com
opn@opnarchitects.com

All reports, plans, specifications, computer files, field data, notes and other documents and instruments prepared by OPN Architects, Inc. as instruments of service shall remain the property of OPN Architects, Inc. OPN Architects, Inc. shall retain all common law, statutory and other reserved rights, including the copyright thereto.

© 2017 OPN Architects, Inc.

Owner
City of Madison Fire Department
314 W. Dayton St.
Madison, WI 53703

Project
Madison Fire Station 14
3201 Dairy Drive
Madison, WI 53718

Civil Engineer
Snyder & Associates, Inc
5010 Voges Rd
Madison WI, 53718
P. 608-838-0444

Structural Engineer
IMEG
1800 Deming Way #200
Middleton, WI 53562
P. 608-223-9600

Mechanical Engineer
IMEG
1800 Deming Way #200
Middleton, WI 53562
P. 608-223-9600

Electrical Engineer
IMEG
1800 Deming Way #200
Middleton, WI 53562
P. 608-223-9600

Key Plan

Sheet Issue Date	
BID DOCUMENTS	11/03/17

Revision	Date

BID DOCUMENTS

Drawing
MEZZANINE FRAMING PLANS - AREA A AND B

City of Madison Contract No. **8027**
OPN Project No. **17207000**

S102

IMEG
1800 DEMING WAY, SUITE 200
MIDDLETON, WI 53562
608.223.9600 FAX: 608.836.0415
www.imegcorp.com
PROJECT # 170011640.00

IMEG CORP RESERVES PROPRIETARY RIGHTS, INCLUDING COPYRIGHTS, TO THIS DRAWING AND THE DATA SHOWN THEREON. SAID DRAWING AND/OR DATA ARE THE EXCLUSIVE PROPERTY OF IMEG CORP AND SHALL NOT BE USED OR REPRODUCED FOR ANY OTHER PROJECT WITHOUT THE EXPRESS WRITTEN APPROVAL AND PARTICIPATION OF IMEG CORP. © 2017 IMEG CORP.

REFERENCE SCALE IN INCHES
0 1 2 3

PRINTED: 10/26/2017 4:45:15 PM

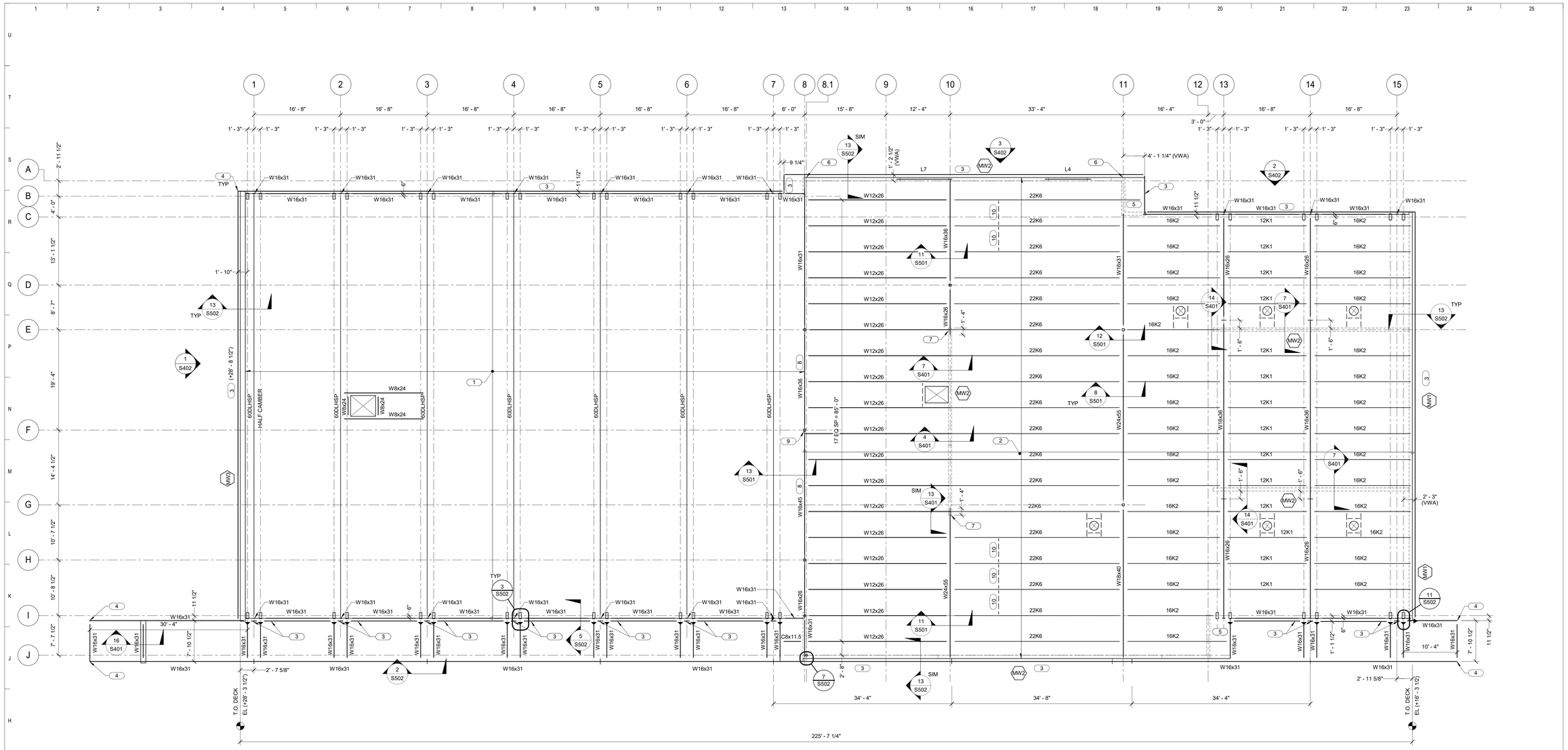

1 ROOF FRAMING PLAN

1/8" = 1'-0"

NOTES:

1. REFER TO 4 AND 5/S501 FOR TYPICAL SHEAR CONNECTION.
2. ▶ INDICATES MOMENT CONNECTION.
3. PROVIDE BRACING OF NON-STRUCTURAL MASONRY PARTITION PER 5/S401.
4. L# INDICATES LINTEL IN STRUCTURAL MASONRY WALL - REFER TO S102 FOR SCHEDULE.
5. FOR LINTEL IN NON-STRUCTURAL WALLS. REFER TO GENERAL NOTES FOR SCHEDULE.
6. PROVIDE ANGLE FRAMING AROUND OPENING PER 6/S501.
7. REFER TO 10/S501 FOR JOIST MODIFICATION DETAIL.
8. (MW#) INDICATES MASONRY WALL. REFER TO S102 FOR SCHEDULE
9. 60DLHSP JOISTS: JOIST SUPPLIER TO DESIGN FOR UNIFORM DL = 585 PLF AND SL = 420 PLF.

KEYNOTES:

1. EPICORE ER3.5A (16 GA) STEEL ROOF DECK, 2 SPAN MINIMUM. FASTENING = 24/3 PATTERN WITH 3/4" PUDDLE WELDS AND #12 SIDELAP SCREWS @ 24" OC.
2. 1 1/2" (20 GA) STEEL ROOF DECK, 2 SPAN MINIMUM. FASTENING = 36/4 (2) WITH 5/8" PUDDLE WELDS AND #10 SIDELAP SCREWS.
3. CONTRACTOR OPTION: W16x31 BEAM WITH FLANGES CUT OFF AND GRIND SMOOTH OR 7/16" BENT PLATE TO MATCH W16x31 DIMENSIONS.
4. PROVIDE FULLY WELDED, MITERED CORNER CONNECTION.
5. PROVIDE TYPE S10 JOIST EXTENSION.
6. BEAM OR BENT PLATE PER KEYNOTE 3 TO CANTILEVER PAST CORNER OF MASONRY WALL TO SUPPORT ROOF. REFER TO DETAIL 13/S502 @ CANTILEVER CONDITION FOR DETAIL.
7. PROVIDE 16" BEAM BEARING. REFER 4/S501 FOR BEAM TO BEAM SHEAR CONNECTION.
8. FRAMING DESIGNED FOR SAFETY TIE-OFF POINT AT THIRD POINTS ALONG BEAM.
9. COLUMN DESIGNED FOR SAFETY TIE-OFF POINT AT TOP OF COLUMN.
10. L5x5x3/8 ANGLE FRAMING.

IMEG
1800 DEMING WAY, SUITE 200
MIDDLETON, WI 53562
608.223.9600 FAX: 608.836.0415
www.imegcorp.com
PROJECT # 170011A0.00

IMEG CORP RESERVES PROPRIETARY RIGHTS, INCLUDING COPYRIGHTS, TO THIS DRAWING AND THE DATA SHOWN THEREON. SAID DRAWING AND/OR DATA ARE THE EXCLUSIVE PROPERTY OF IMEG CORP AND SHALL NOT BE USED OR REPRODUCED FOR ANY OTHER PROJECT WITHOUT THE EXPRESS WRITTEN APPROVAL AND PARTICIPATION OF IMEG CORP. © 2017 IMEG CORP.

REFERENCE SCALE IN INCHES
0 1 2 3

OPN ARCHITECTS
301 N BROOM STREET #100
MADISON, WI 53703
608-819-0260 PHONE
www.opnarchitects.com
opn@opnarchitects.com

All reports, plans, specifications, computer files, field data, notes and other documents and instruments prepared by OPN Architects, Inc. as instruments of service shall remain the property of OPN Architects, Inc. OPN Architects, Inc. shall retain all common law, statutory and other reserved rights, including the copyright thereto.

© 2017 OPN Architects, Inc.

Owner
City of Madison Fire Department
314 W. Dayton St.
Madison, WI 53703

Project
Madison Fire Station 14
3201 Dairy Drive
Madison, WI 53718

Civil Engineer
Snyder & Associates, Inc
5010 Voges Rd
Madison WI, 53718
P. 608-838-0444

Structural Engineer
IMEG
1800 Deming Way #200
Middleton, WI 53562
P. 608-223-9600

Mechanical Engineer
IMEG
1800 Deming Way #200
Middleton, WI 53562
P. 608-223-9600

Electrical Engineer
IMEG
1800 Deming Way #200
Middleton, WI 53562
P. 608-223-9600

Key Plan

Sheet Issue Date	
BID DOCUMENTS	11/03/17

Revision	Date

BID DOCUMENTS

Drawing
ROOF FRAMING PLAN

City of Madison Contract No. **8027**
OPN Project No. **17207000**

S103

PRINTED: 10/26/2017 4:45:16 PM

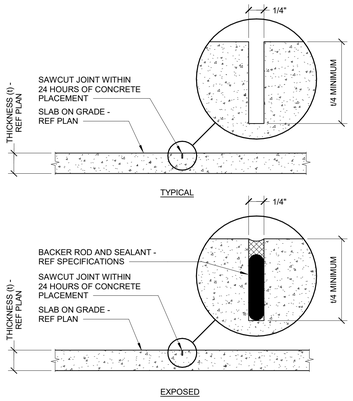

1 TYPICAL SLAB ON GRADE CONTROL JOINT

1" = 1'-0"

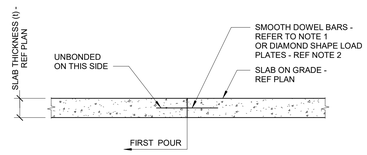

2 TYPICAL SLAB CONSTRUCTION JOINT

3/4" = 1'-0"

NOTES:

1. WHEN 'T' IS 4" USE 1/2"Ø x 1'-4" SMOOTH DOWEL BARS AT 18" OC.
   WHEN 'T' IS 8" USE 3/4"Ø x 1'-2" SMOOTH DOWEL BARS AT 12" OC.
2. WHEN 'T' IS 4" USE 1/4"x4 1/2"x4 1/2" DIAMOND LOAD PLATES AT 18" OC.
   WHEN 'T' IS 8" USE 3/8"x4 1/2"x4 1/2" DIAMOND LOAD PLATES AT 18" OC.

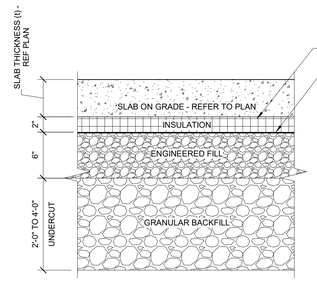

3 TYPICAL SLAB ON GRADE SECTION

1 1/2" = 1'-0"

NOTES:

1. REFERENCE SPECIFICATIONS FOR MATERIAL AND COMPACTION REQUIREMENTS.

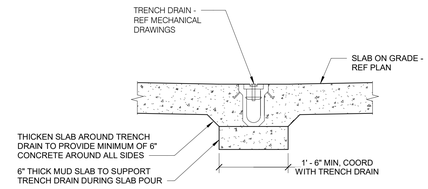

4 TRENCH DRAIN DETAIL

3/4" = 1'-0"

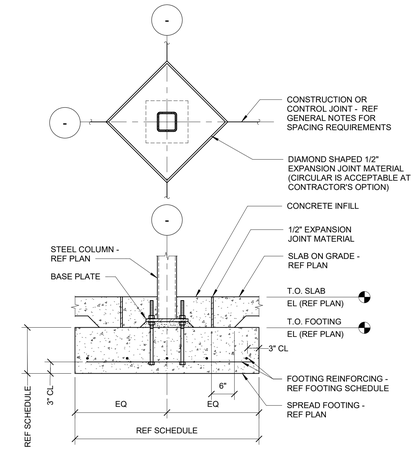

5 TYPICAL SPREAD FOOTING

3/4" = 1'-0"

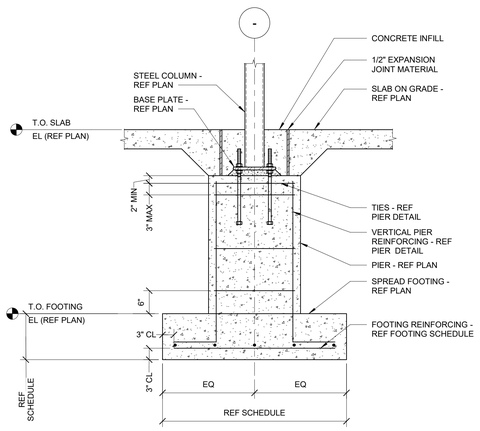

6 TYPICAL SPREAD FOOTING WITH PIER

3/4" = 1'-0"

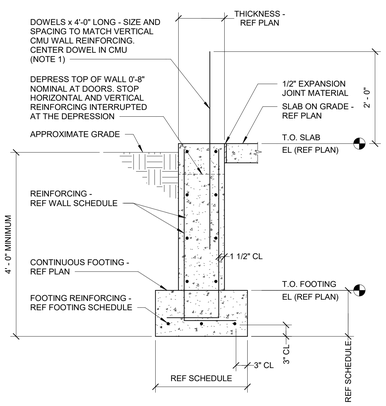

7 TYPICAL FOUNDATION WALL

3/4" = 1'-0"

NOTES:

1. REFER TO PLAN FOR LOCATIONS OF MASONRY WALLS. DOWELS NOT REQUIRED WHERE THERE IS NO MASONRY WALL ABOVE.
2. AT SIM; NO SLAB ON GRADE

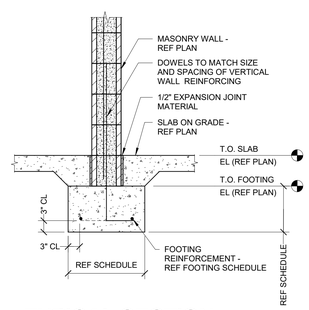

8 TYPICAL SECTION AT MASONRY WALL FOOTING

3/4" = 1'-0"

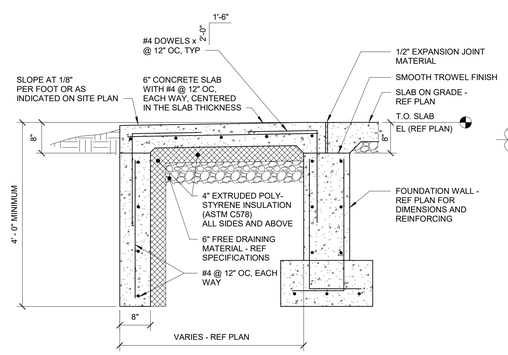

9 TYPICAL STOOP SECTION

3/4" = 1'-0"

NOTES:

1. AT SIM: REFER TO DETAIL FOR DOWEL CONNECTION BETWEEN FOUNDATION WALL AND EXTERIOR SITE PAVING. REFER TO CIVIL DRAWINGS FOR SITE PAVING THICKNESS AND REINFORCING.
2. REFER TO TYPICAL FOUNDATION WALL DETAIL FOR INFORMATION NOT SHOWN.

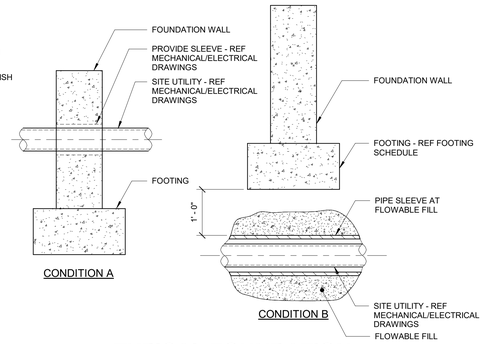

10 TYPICAL FOUNDATION DETAILS AT SITE UTILITIES

3/4" = 1'-0"

NOTES:

1. REFERENCE MECHANICAL AND ELECTRICAL DRAWINGS FOR ALL LOCATIONS, ELEVATIONS, ETC., OF SITE UTILITIES.
2. DETAIL REQUIRED AT ALL UTILITIES HAVING A PLAN WIDTH UP TO 3'-0". FOR WIDTHS GREATER THAN 3'-0", REFERENCE PLAN FOR REQUIRED DETAIL.
3. CONDITION B DOES NOT APPLY AT SPREAD FOOTING SITUATIONS AND SHALL NOT EXTEND THROUGH RAMMED AGGREGATE PIERS. GENERAL CONTRACTOR SHALL NOTIFY ENGINEER SHOULD SUCH A CONDITION ARISE AND AWAIT FURTHER INSTRUCTIONS.

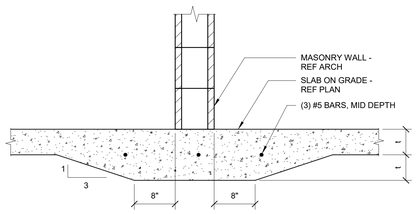

11 NON-BEARING WALL DETAIL

1" = 1'-0"

NOTES:

1. TO BE USED AT INTERIOR, NON-STRUCTURAL WALLS BRACED AT TOP OF THE WALL.

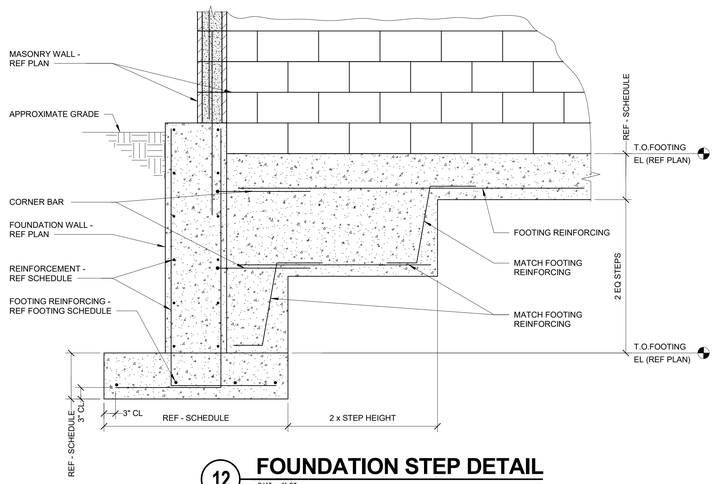

12 FOUNDATION STEP DETAIL

3/4" = 1'-0"

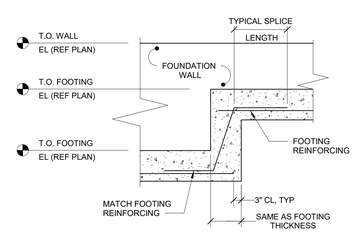

13 TYPICAL FOOTING STEP

1/2" = 1'-0"

OPN ARCHITECTS
301 N BROOM STREET #100
MADISON, WI 53703
608-819-0260 PHONE
www.opnarchitects.com
opn@opnarchitects.com

All reports, plans, specifications, computer files, field data, notes and other documents and instruments prepared by OPN Architects, Inc. as instruments of service shall remain the property of OPN Architects, Inc. OPN Architects, Inc. shall retain all common law, statutory and other reserved rights, including the copyright thereto.

© 2017 OPN Architects, Inc.

Owner
City of Madison Fire Department
314 W. Dayton St.
Madison, WI 53703

Project
Madison Fire Station 14
3201 Dairy Drive
Madison, WI 53718

Civil Engineer
Snyder & Associates, Inc
5010 Voges Rd
Madison WI, 53718
P. 608-838-0444

Structural Engineer
IMEG
1800 Deming Way #200
Middleton, WI 53562
P. 608-223-9600

Mechanical Engineer
IMEG
1800 Deming Way #200
Middleton, WI 53562
P. 608-223-9600

Electrical Engineer
IMEG
1800 Deming Way #200
Middleton, WI 53562
P. 608-223-9600

Key Plan

Sheet Issue Date	
BID DOCUMENTS	11/03/17

Revision	Date

BID DOCUMENTS

Drawing
FOUNDATION DETAILS

City of Madison Contract No. **8027**
OPN Project No. **17207000**

S201

IMEG
1800 DEMING WAY, SUITE 200
MIDDLETON, WI 53562
608.223.9600 FAX: 608.836.0415
www.imegcorp.com
PROJECT # 17001140.00

IMEG CORP RESERVES PROPRIETARY RIGHTS, INCLUDING COPYRIGHTS, TO THIS DRAWING AND THE DATA SHOWN THEREON. SAID DRAWING AND/OR DATA ARE THE EXCLUSIVE PROPERTY OF IMEG CORP AND SHALL NOT BE USED OR REPRODUCED FOR ANY OTHER PROJECT WITHOUT THE EXPRESS WRITTEN APPROVAL AND PARTICIPATION OF IMEG CORP. © 2017 IMEG CORP.

REFERENCE SCALE IN INCHES
0 1 2 3

PRINTED: 10/26/2017 4:45:17 PM

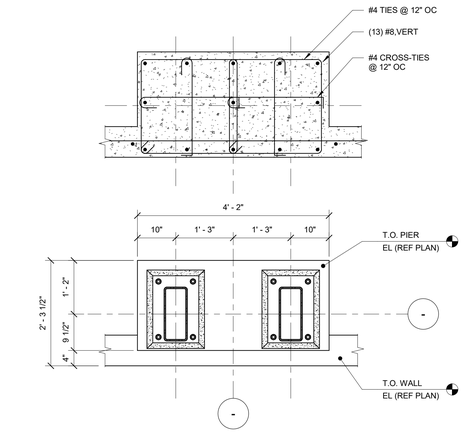

1 PIER (P1) DETAIL

3/4" = 1'-0"

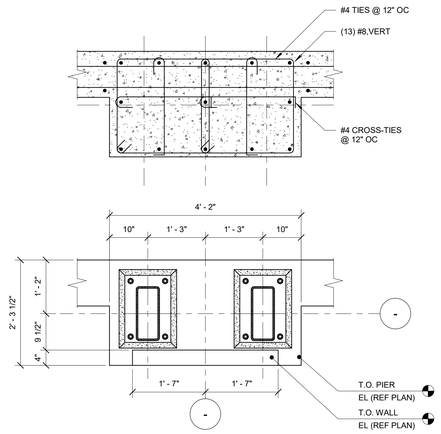

2 PIER (P2) DETAIL

3/4" = 1'-0"

NOTES:

1. AT SIM: REFER TO PLAN AND P1 DETAIL FOR FOUNDATION WALL LAYOUT.

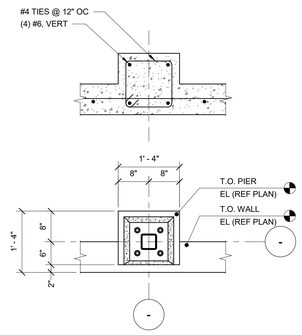

3 PIER (P3) DETAIL

3/4" = 1'-0"

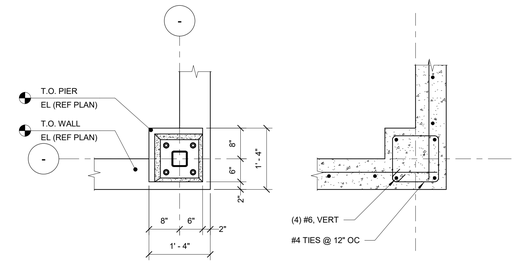

4 PIER (P4) DETAIL

3/4" = 1'-0"

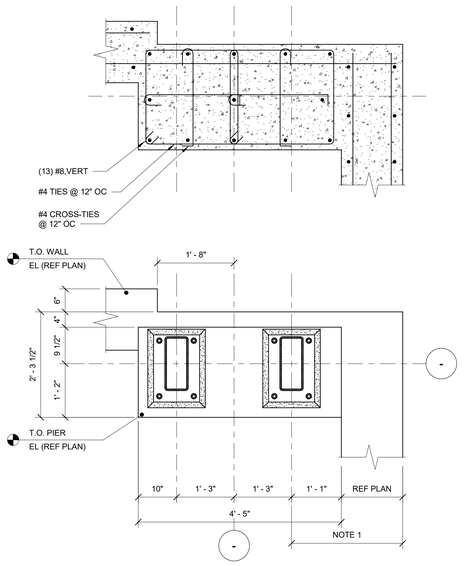

5 PIER (P5) DETAIL

3/4" = 1'-0"

NOTES:

1. AT SIM: REFER TO PLAN FOR DIMENSION.

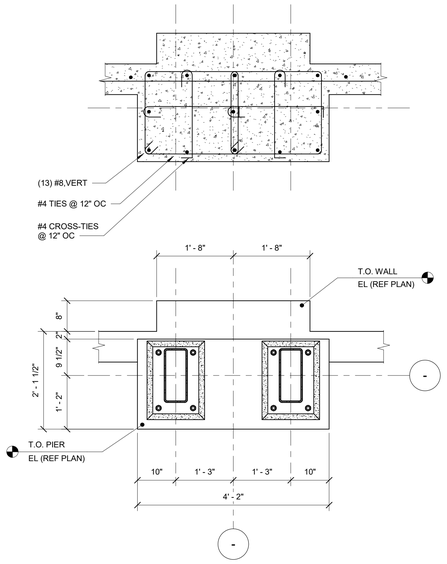

6 PIER (P6) DETAIL

3/4" = 1'-0"

NOTES:

1. AT SIM: REFER TO PLAN FOR FOUNDATION WALL LAYOUT.

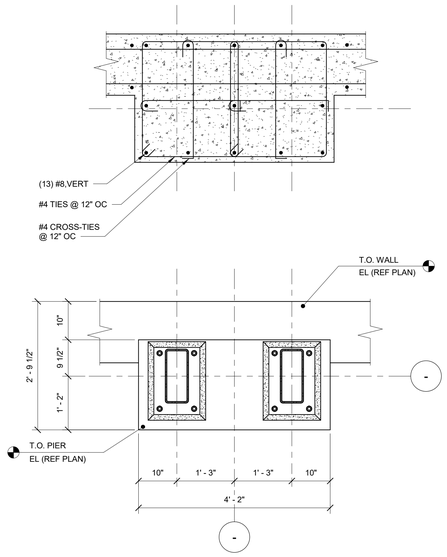

7 PIER (P7) DETAIL

3/4" = 1'-0"

NOTES:

1. AT SIM: REFER TO PLAN FOR FOUNDATION WALL LAYOUT.

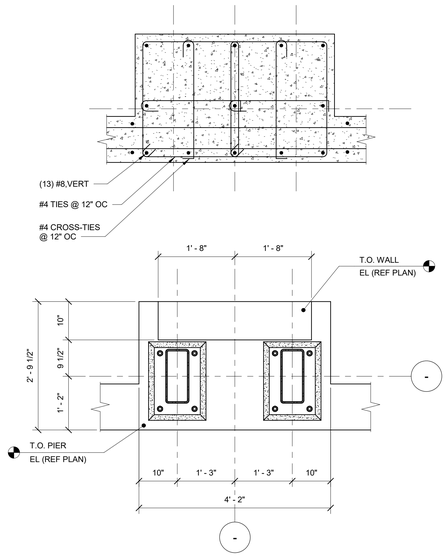

8 PIER (P8) DETAIL

3/4" = 1'-0"

NOTES:

1. AT SIM: REFER TO PLAN AND P7 DETAIL FOR FOUNDATION WALL LAYOUT.

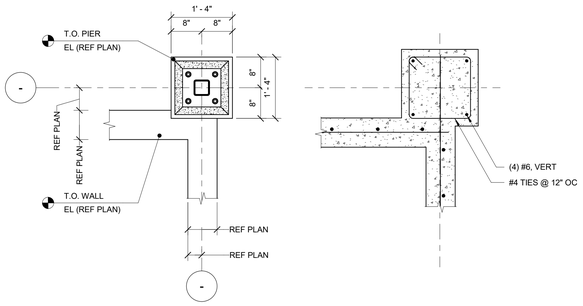

9 PIER (P9) DETAIL

3/4" = 1'-0"

OPN ARCHITECTS

301 N BROOM STREET #100
MADISON, WI 53703
608-819-0260 PHONE
www.opnarchitects.com
opn@opnarchitects.com

All reports, plans, specifications, computer files, field data, notes and other documents and instruments prepared by OPN Architects, Inc. as instruments of service shall remain the property of OPN Architects, Inc. OPN Architects, Inc. shall retain all common law, statutory and other reserved rights, including the copyright thereto.

© 2017 OPN Architects, Inc.

Owner

City of Madison Fire Department
314 W. Dayton St.
Madison, WI 53703

Project

Madison Fire Station 14
3201 Dairy Drive
Madison, WI 53718

Civil Engineer

Snyder & Associates, Inc
5010 Voges Rd
Madison WI, 53718
P. 608-838-0444

Structural Engineer

IMEG
1800 Deming Way #200
Middleton, WI 53562
P. 608-223-9600

Mechanical Engineer

IMEG
1800 Deming Way #200
Middleton, WI 53562
P. 608-223-9600

Electrical Engineer

IMEG
1800 Deming Way #200
Middleton, WI 53562
P. 608-223-9600

Key Plan

Sheet Issue Date	
BID DOCUMENTS	11/03/17

Revision	Date

BID DOCUMENTS

Drawing

FOUNDATION DETAILS

City of Madison Contract No. **8027**
OPN Project No. **17207000**

S202

IMEG
1800 DEMING WAY, SUITE 200
MIDDLETON, WI 53562
608.223.9600 FAX: 608.836.0415
www.imegcorp.com
PROJECT # 170014I.00

IMEG CORP RESERVES PROPRIETARY RIGHTS, INCLUDING COPYRIGHTS, TO THIS DRAWING AND THE DATA SHOWN THEREON. SAID DRAWING AND/OR DATA ARE THE EXCLUSIVE PROPERTY OF IMEG CORP AND SHALL NOT BE USED OR REPRODUCED FOR ANY OTHER PROJECT WITHOUT THE EXPRESS WRITTEN APPROVAL AND PARTICIPATION OF IMEG CORP. © 2017 IMEG CORP.

REFERENCE SCALE IN INCHES

0 1 2 3

PRINTED: 10/26/2017 4:45:18 PM

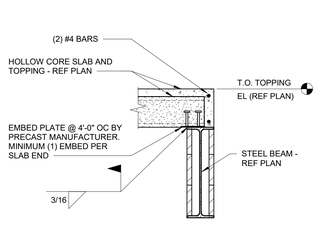

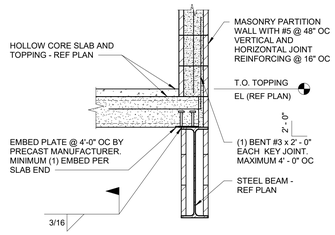

1 TYPICAL HOLLOW CORE SLAB BEARING AT STEEL BEAM

3/4" = 1'-0"

NOTES:

1. REFER TO ARCHITECTURAL DRAWINGS FOR WALL EXTENTS ABOVE HOLLOW CORE FLOOR.

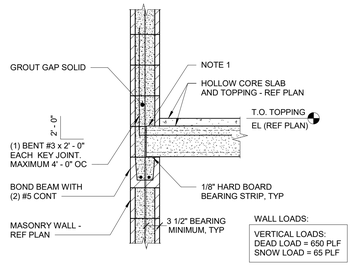

2 HOLLOW CORE SLAB BEARING AT INTERIOR WALL

3/4" = 1'-0"

NOTES:

1. PRECAST MANUFACTURER TO DETERMINE IF ENDS OF HOLLOW CORE SLABS REQUIRE SOLID ENDS DUE TO WALL LOADS.

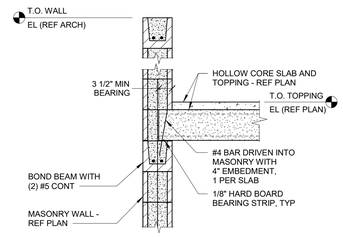

3 HOLLOW CORE SLAB BEARING AT CMU WALL

3/4" = 1'-0"

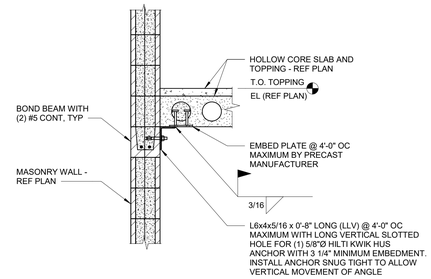

4 HOLLOW CORE SLAB PARALLEL TO EXTERIOR WALL

3/4" = 1'-0"

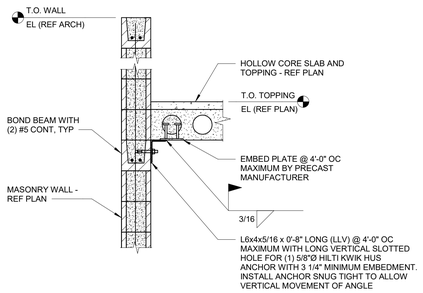

5 HOLLOW CORE SLAB PARALLEL TO CMU WALL

3/4" = 1'-0"

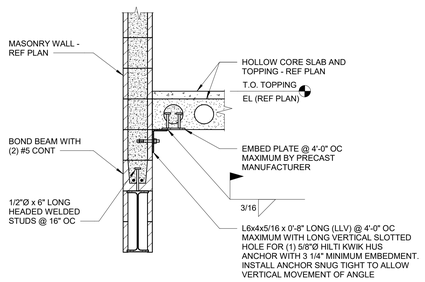

6 FLOOR EDGE DETAIL

3/4" = 1'-0"

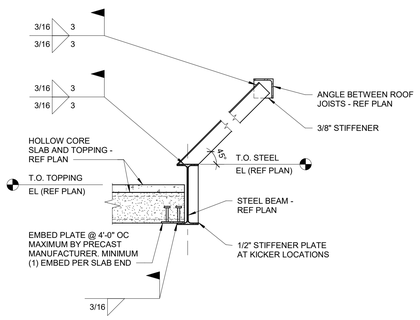

7 FLOOR EDGE DETAIL

3/4" = 1'-0"

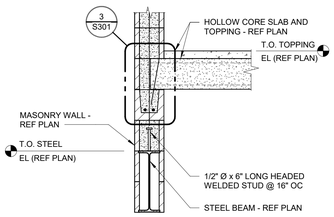

8 HOLLOW CORE SLAB BEARING AT CMU WALL

3/4" = 1'-0"

NOTES:

1. AT SIM: REFER TO ARCHITECTURAL DRAWINGS FOR WALL EXTENTS ABOVE HOLLOW CORE FLOOR.

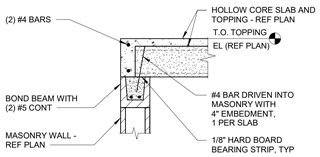

9 HOLLOW CORE SLAB BEARING AT CMU WALL

3/4" = 1'-0"

OPN ARCHITECTS
301 N BROOM STREET #100
MADISON, WI 53703
608-819-0260 PHONE
www.opnarchitects.com
opn@opnarchitects.com

All reports, plans, specifications, computer files, field data, notes and other documents and instruments prepared by OPN Architects, Inc. as instruments of service shall remain the property of OPN Architects, Inc. OPN Architects, Inc. shall retain all common law, statutory and other reserved rights, including the copyright thereto.

© 2017 OPN Architects, Inc.

Owner
City of Madison Fire Department
314 W. Dayton St.
Madison, WI 53703

Project
Madison Fire Station 14
3201 Dairy Drive
Madison, WI 53718

Civil Engineer
Snyder & Associates, Inc
5010 Voges Rd
Madison WI, 53718
P. 608-838-0444

Structural Engineer
IMEG
1800 Deming Way #200
Middleton, WI 53562
P. 608-223-9600

Mechanical Engineer
IMEG
1800 Deming Way #200
Middleton, WI 53562
P. 608-223-9600

Electrical Engineer
IMEG
1800 Deming Way #200
Middleton, WI 53562
P. 608-223-9600

Key Plan

Sheet Issue Date
BID DOCUMENTS 11/03/17

Revision	Date

IMEG
1800 DEMING WAY, SUITE 200
MIDDLETON, WI 53562
608.223.9600 FAX: 608.836.0415
www.imegcorp.com
PROJECT # 17001140.00

IMEG CORP RESERVES PROPRIETARY RIGHTS, INCLUDING COPYRIGHTS, TO THIS DRAWING AND THE DATA SHOWN THEREON. SAID DRAWING AND/OR DATA ARE THE EXCLUSIVE PROPERTY OF IMEG CORP AND SHALL NOT BE USED OR REPRODUCED FOR ANY OTHER PROJECT WITHOUT THE EXPRESS WRITTEN APPROVAL AND PARTICIPATION OF IMEG CORP. © 2017 IMEG CORP.

REFERENCE SCALE IN INCHES
0 1 2 3

BID DOCUMENTS

Drawing
PRECAST DETAILS

City of Madison Contract No. **8027**
OPN Project No. **17207000**

S301

PRINTED: 10/26/2017 4:45:20 PM

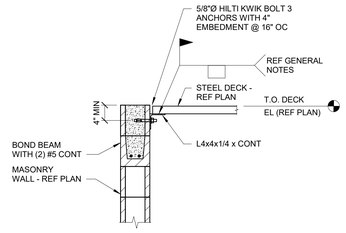

1 ROOF DECK SUPPORT AT MASONRY

3/4" = 1'-0"

NOTES:

1. REFER TO ARCHITECTURAL DRAWINGS FOR T.O. WALL ELEVATION. ROTATE ANGLE LEG UP WHERE MASONRY HEIGHT ALLOWS.

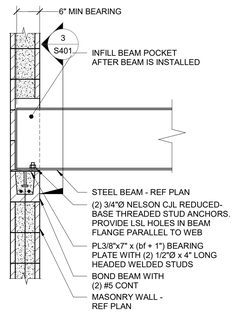

2 TYPICAL BEAM BEARING ON MASONRY

3/4" = 1'-0"

NOTES:

1. SIM CONDITION AT BEAM BEARING PARALLEL TO THE MASONRY WALL UNO.

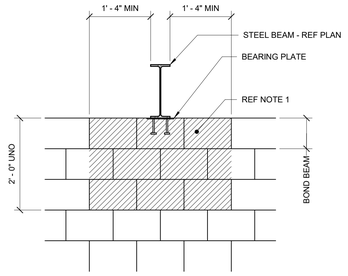

3 TYPICAL BEAM BEARING ON MASONRY

3/4" = 1'-0"

NOTES:

1. IN SHADED AREA, FILL ALL CORES IN WALL WITH GROUT MINIMUM AT CORNER CONDITION: 1'-4", EACH WAY.

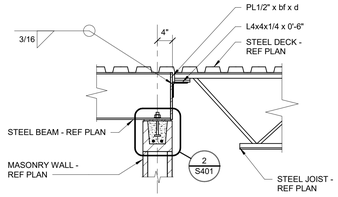

4 FRAMING DETAILS

3/4" = 1'-0"

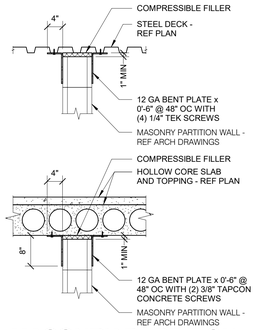

5 MASONRY PARTITION WALL AT STEEL DECK

3/4" = 1'-0"

NOTES:

1. PROVIDE THE BENT PLATE CLIP ANGLES ON ALL INTERIOR NON-LOAD BEARING MASONRY PARTITION WALLS. REFERENCE ARCHITECTURAL DRAWINGS FOR LOCATION OF ALL MASONRY PARTITION WALLS.
2. BENT PLATE CLIPS MAY BE ELIMINATED IF ALL THE FOLLOWING CONDITIONS ARE MET.
   A. LENGTH OF WALL BETWEEN PERPENDICULAR INTERSECTING WALLS IS LESS THAN THE FOLLOWING:
      a. 15'-0" FOR 6" CMU
      b. 20'-0" FOR 8" CMU
      c. 22'-0" FOR 10" CMU
      d. 25'-0" FOR 12" CMU
   B. WALL AND INTERSECTION HAVE PROPERLY INSTALLED (9 GA) TRUSS TYPE HORIZONTAL JOINT REINFORCING @ 16" OC.

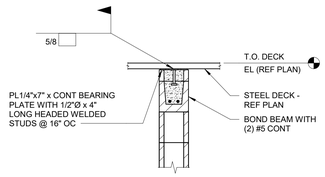

7 SHEAR WALL CONNECTION DETAIL

3/4" = 1'-0"

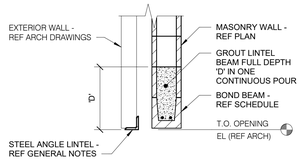

8 LINTEL DETAIL

3/4" = 1'-0"

NOTES:

1. REFERENCE ARCHITECTURAL DRAWINGS FOR INSULATION, THROUGH-WALL FLASHING, AND WEEP HOLES.
2. SHORE MASONRY UNTIL GROUT FOR LINTEL HAS REACHED ITS SPECIFIED STRENGTH.

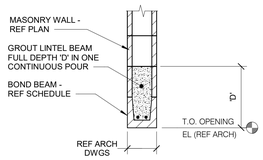

9 LINTEL DETAIL

3/4" = 1'-0"

NOTES:

1. SHORE MASONRY UNTIL GROUT FOR LINTEL HAS REACHED ITS SPECIFIED STRENGTH.

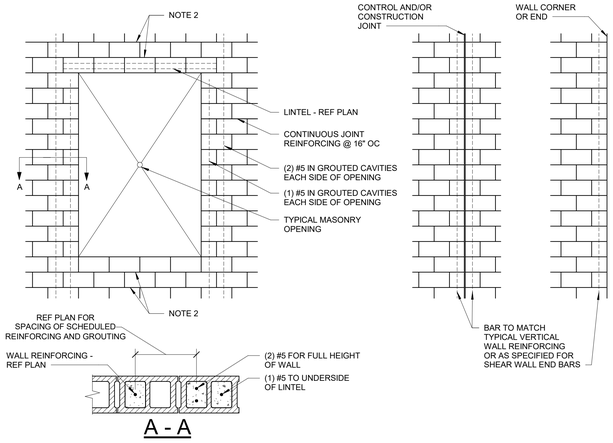

6 TYPICAL MASONRY WALL DETAIL

3/4" = 1'-0"

NOTES:

1. REFER TO ARCHITECTURAL ELEVATIONS FOR MASONRY CONTROL JOINT LOCATIONS.
2. TWO COURSES OF JOINT REINFORCING ARE REQUIRED ABOVE THE LINTEL AND BELOW THE SILL AND SHALL EXTEND A MINIMUM OF 24 INCHES PAST THE OPENING.

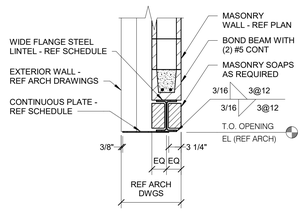

10 LINTEL DETAIL

3/4" = 1'-0"

NOTES:

1. REFERENCE ARCHITECTURAL DRAWINGS FOR INSULATION, THROUGH-WALL FLASHING, AND WEEP HOLES.

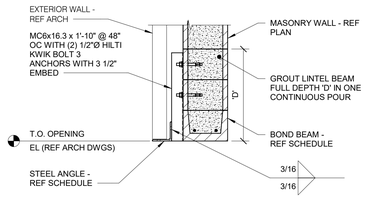

11 LINTEL DETAIL

3/4" = 1'-0"

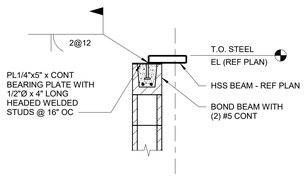

12 WALL SUPPORT DETAIL

3/4" = 1'-0"

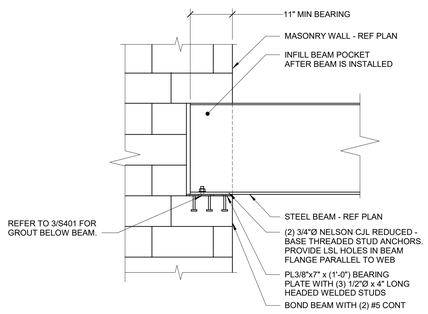

13 BEAM BEARING PARALLEL TO MASONRY

3/4" = 1'-0"

NOTES:

1. AT SIM: REFER TO PLAN FOR BEARING LENGTH. EXTEND BEARING PLATE 1" LONGER THAN BEARING LENGTH.

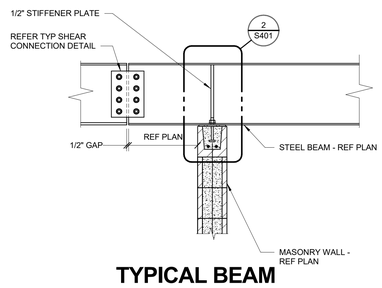

14 TYPICAL BEAM BEARING ON MASONRY

3/4" = 1'-0"

NOTES:

1. EITHER WELDED OR BOLTED CONNECTIONS MAY BE EMPLOYED.

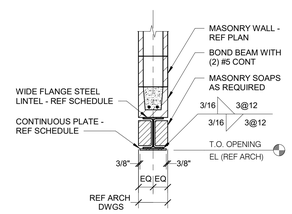

15 LINTEL DETAIL

3/4" = 1'-0"

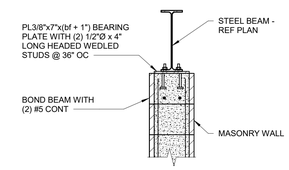

16 BEAM BEARING ON MASONRY WALL

3/4" = 1'-0"

OPN ARCHITECTS
301 N BROOM STREET #100
MADISON, WI 53703
608-819-0260 PHONE
www.opnarchitects.com
opn@opnarchitects.com

All reports, plans, specifications, computer files, field data, notes and other documents and instruments prepared by OPN Architects, Inc. as instruments of service shall remain the property of OPN Architects, Inc. OPN Architects, Inc. shall retain all common law, statutory and other reserved rights, including the copyright thereto.

© 2017 OPN Architects, Inc.

Owner
City of Madison Fire Department
314 W. Dayton St.
Madison, WI 53703

Project
Madison Fire Station 14
3201 Dairy Drive
Madison, WI 53718

Civil Engineer
Snyder & Associates, Inc
5010 Voges Rd
Madison WI, 53718
P. 608-838-0444

Structural Engineer
IMEG
1800 Deming Way #200
Middleton, WI 53562
P. 608-223-9600

Mechanical Engineer
IMEG
1800 Deming Way #200
Middleton, WI 53562
P. 608-223-9600

Electrical Engineer
IMEG
1800 Deming Way #200
Middleton, WI 53562
P. 608-223-9600

Key Plan

Sheet Issue Date	
BID DOCUMENTS	11/03/17

Revision	Date

BID DOCUMENTS

Drawing
MASONRY DETAILS

City of Madison Contract No. **8027**
OPN Project No. **17207000**

IMEG
1800 DEMING WAY, SUITE 200
MIDDLETON, WI 53562
608.223.9600 FAX: 608.836.0415
www.imegcorp.com
PROJECT # 170011440.00

IMEG CORP RESERVES PROPRIETARY RIGHTS, INCLUDING COPYRIGHTS, TO THIS DRAWING AND THE DATA SHOWN THEREON. SAID DRAWING AND/OR DATA ARE THE EXCLUSIVE PROPERTY OF IMEG CORP AND SHALL NOT BE USED OR REPRODUCED FOR ANY OTHER PROJECT WITHOUT THE EXPRESS WRITTEN APPROVAL AND PARTICIPATION OF IMEG CORP. © 2017 IMEG CORP.

REFERENCE SCALE IN INCHES
0 1 2 3

S401

PRINTED: 10/26/2017 4:45:21 PM

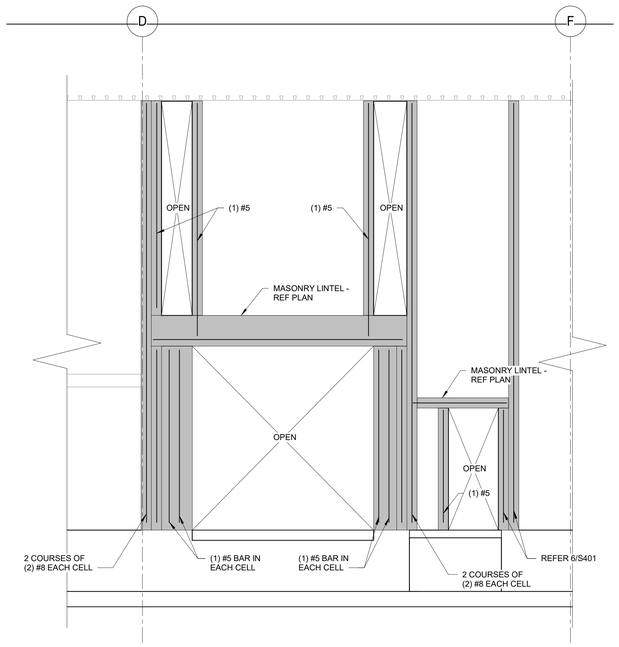

1 NORTH ELEVATION

1/4" = 1'-0"

NOTES:

1. TYPICAL WALL REINFORCEMENT NOT SHOWN FOR CLARITY.

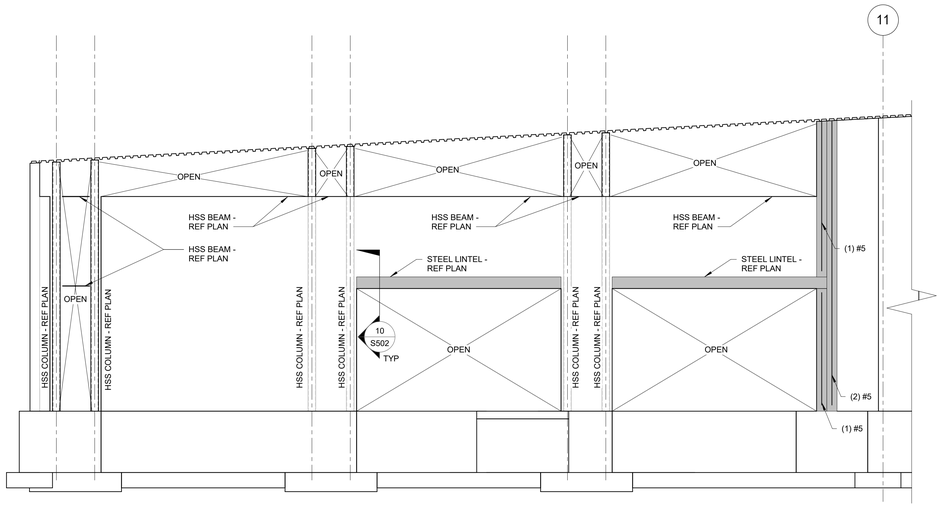

2 EAST ELEVATION

1/4" = 1'-0"

NOTES:

1. TYPICAL WALL REINFORCEMENT NOT SHOWN FOR CLARITY.

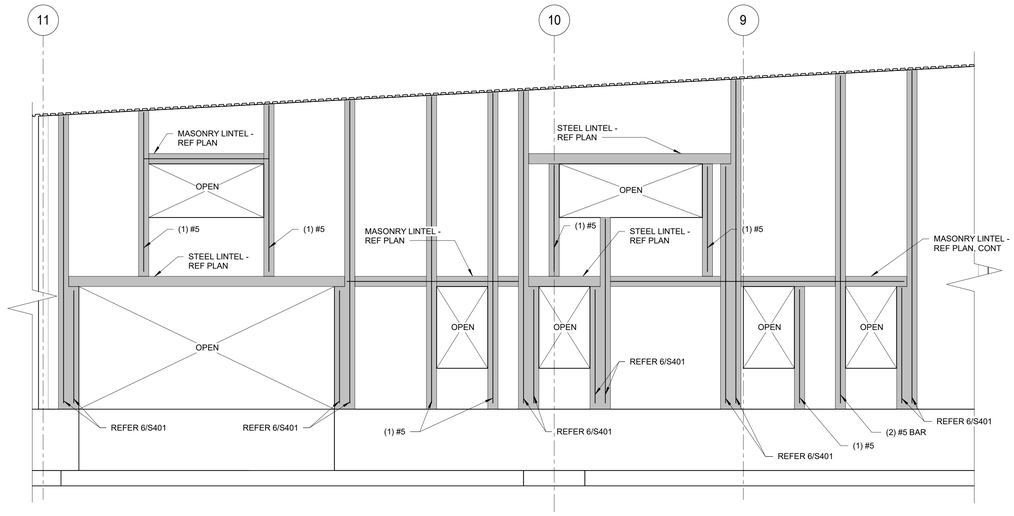

3 EAST ELEVATION

1/4" = 1'-0"

NOTES:

1. TYPICAL WALL REINFORCEMENT NOT SHOWN FOR CLARITY.

OPN ARCHITECTS

All reports, plans, specifications, computer files, field data, notes and other documents and instruments prepared by OPN Architects, Inc. as instruments of service shall remain the property of OPN Architects, Inc. OPN Architects, Inc. shall retain all common law, statutory and other reserved rights, including the copyright thereto.

© 2017 OPN Architects, Inc.

Owner

City of Madison Fire Department
314 W. Dayton St.
Madison, WI 53703

Project

Madison Fire Station 14
3201 Dairy Drive
Madison, WI 53718

Civil Engineer

Snyder & Associates, Inc
5010 Voges Rd
Madison WI, 53718
P. 608-838-0444

Structural Engineer

IMEG
1800 Deming Way #200
Middleton, WI 53562
P. 608-223-9600

Mechanical Engineer

IMEG
1800 Deming Way #200
Middleton, WI 53562
P. 608-223-9600

Electrical Engineer

IMEG
1800 Deming Way #200
Middleton, WI 53562
P. 608-223-9600

Key Plan

Sheet Issue Date	
BID DOCUMENTS	11/03/17

Revision	Date

BID DOCUMENTS

Drawing

MASONRY WALL ELEVATIONS

City of Madison Contract No. **8027**
OPN Project No. **17207000**

S402

IMEG
1800 DEMING WAY, SUITE 200
MIDDLETON, WI 53562
608.223.9600 FAX: 608.836.0415
www.imegcorp.com
PROJECT # 170011400.00

IMEG CORP. RESERVES PROPRIETARY RIGHTS, INCLUDING COPYRIGHTS, TO THIS DRAWING AND THE DATA SHOWN THEREON. SAID DRAWING AND/OR DATA ARE THE EXCLUSIVE PROPERTY OF IMEG CORP. AND SHALL NOT BE USED OR REPRODUCED FOR ANY OTHER PROJECT WITHOUT THE EXPRESS WRITTEN APPROVAL AND PARTICIPATION OF IMEG CORP. © 2017 IMEG CORP.

REFERENCE SCALE IN INCHES

0 1 2 3

PRINTED: 10/26/2017 4:45:23 PM

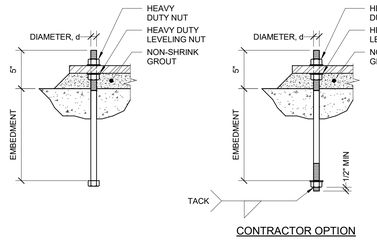

1 TYPICAL ANCHOR ROD

1 1/2" = 1'-0"

NOTES:

1. REFERENCE BASE PLATE DETAILS FOR DIAMETER AND EMBEDMENT.
2. REFERENCE GENERAL NOTES FOR MATERIAL REQUIREMENTS.
3. ANCHOR RODS SHALL BE SET PRIOR TO PLACEMENT OF CONCRETE.
4. PROTECT ANCHOR RODS FROM DAMAGE.
5. ANCHOR SHALL BE SET SO AS NOT TO VARY FROM THE DIMENSIONS SHOWN ON THE ERECTION DRAWINGS BY MORE THAN THE FOLLOWING:
   A. 1/8" CENTER TO CENTER OF ANY TWO RODS WITHIN AN ANCHOR ROD GROUP.
   B. 1/4" CENTER TO CENTER OF ADJACENT ANCHOR ROD GROUPS.
   C. ELEVATION OF THE TOP OF ANCHOR RODS ± 1/2".
   D. MAXIMUM ACCUMULATION OF 1/4" PER HUNDRED FEET ALONG THE ESTABLISHED COLUMN LINE.
   E. 1/4" FROM THE CENTER OF ANY ANCHOR ROD GROUP TO THE ESTABLISHED COLUMN LINE THROUGH THAT GROUP.
   F. REFERENCE AISC CODE OF STANDARD PRACTICE FOR ADDITIONAL INFORMATION.
6. SET ANCHOR RODS PERPENDICULAR TO BEARING SURFACE, UNLESS NOTED OTHERWISE.
7. PROVIDE 1 1/2" NON-SHRINK GROUT AT ALL BASE PLATES.

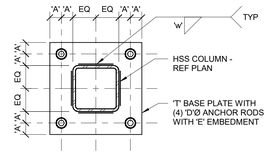

HSS BASE PLATE SCHEDULE							
MARK	COLUMN	'T'	'A'	'D'	'E'	'w'	COMMENTS
BP1	HSS4x4	3/4"	1 1/2"	3/4"	9"	1/4"	-
BP2	HSS5x5	1"	1 1/2"	3/4"	9"	1/4"	-

2 HSS COLUMN BASE PLATE DETAIL

1 1/2" = 1'-0"

NOTES:

1. REFER TO TYPICAL ANCHOR ROD DETAIL FOR ADDITIONAL INFORMATION.
2. NO WELDS REQUIRED AT RADIUSES.

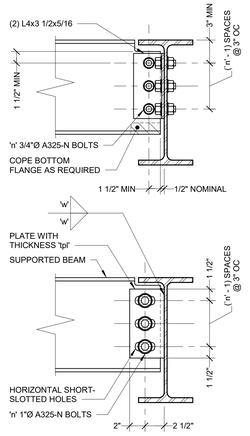

DOUBLE ANGLE CONNECTION TABLE	
SUPPORTED BEAM	'n'
W8, W10	2
W12, W14	3
W16	4
W18	5
W21	6
W24, W27	7

KNIFE PLATE CONNECTION TABLE			
SUPPORTED BEAM	'tpl'	'n'	'w'
W8, W10	1/4"	2	3/16"
W12, W14	5/16"	3	1/4"
W16	5/16"	4	1/4"
W18	5/16"	5	1/4"
W21	5/16"	6	1/4"
W24, W27	3/8"	7	1/4"

4 TYPICAL SHEAR CONNECTION

1 1/2" = 1'-0"

NOTES:

1. BOTH DOUBLE ANGLE AND KNIFE PLATE CONNECTION CONFIGURATIONS ARE ACCEPTABLE, UNLESS NOTED OTHERWISE. FABRICATOR AND DETAILER SHALL SELECT WHICH OPTION IS BEST SUITED FOR THEIR FABRICATION PROCESS AND THE ANTICIPATED ERECTION PROCEDURES.
2. DETAIL TO BE SIMILAR AT CONNECTIONS TO WIDE FLANGE OR HSS COLUMNS.
3. UNLESS NOTED OTHERWISE, PROVIDE SHEAR CONNECTIONS AS INDICATED BY THIS DETAIL.
4. DETAILER IS RESPONSIBLE FOR FULLY DEVELOPING GEOMETRY AND DIMENSIONAL INFORMATION REQUIRED TO FABRICATE.
5. WHERE TYPICAL SHEAR CONNECTION DETAIL IS NOT APPLICABLE, FABRICATOR SHALL SELECT AND DETAIL ALTERNATE CONNECTION CAPABLE OF DEVELOPING EQUAL STRENGTH. ALTERNATE CONNECTION SHALL BE SELECTED IN ACCORDANCE WITH AISC ASD CONNECTION TABLES.

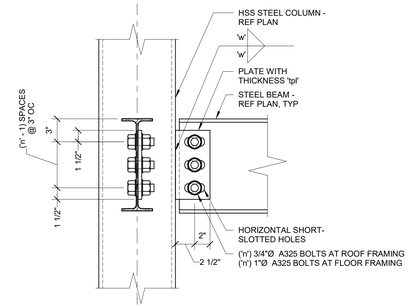

KNIFE PLATE CONNECTION TABLE			
SUPPORTED BEAM	'tpl'	'n'	'w'
W8, W10	1/4"	2	3/16"
W12, W14	5/16"	3	1/4"
W16	3/8"	4	1/4"
W18	1/2"	5	5/16"
W21	1/2"	6	5/16"
W24	1/2"	7	5/16"

5 TYPICAL BEAM TO TUBE COLUMN SHEAR CONNECTION

1 1/2" = 1'-0"

NOTES:

1. WHERE TYPICAL SHEAR CONNECTION DETAIL IS NOT APPLICABLE, FABRICATOR SHALL SELECT AND DETAIL ALTERNATE CONNECTION CAPABLE OF DEVELOPING EQUAL STRENGTH. ALTERNATE CONNECTION SHALL BE SELECTED IN ACCORDANCE WITH AISC ASD CONNECTION TABLES.

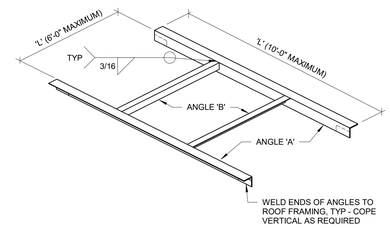

'L'	ANGLE 'A'	ANGLE 'B'
UP TO 1'-0"	NONE - SUMP PAN ONLY	NONE - SUMP PAN ONLY
1'-1" TO 4'-6"	L4x4x1/4	L4x4x1/4
4'-7" TO 6'-0"	L4x4x5/16	L4x4x1/4
6'-1" TO 8'-0"	L4x4x3/8	-
8'-1" TO 10'-0"	L6x4x3/8 (LLV)	-

6 DECK OPENING FRAMING DETAIL

3/4" = 1'-0"

NOTES:

1. USE ABOVE FRAMING AT ALL OPENINGS EXCEEDING 1'-0" UNO.
2. REFERENCE ARCHITECTURAL AND MECHANICAL DRAWINGS FOR SIZE AND LOCATION OF ALL OPENINGS.
3. ROOF OPENING FRAMING NOT REQUIRED AT SIDE DISCHARGE ROOF DRAINS. COORDINATE WITH MECHANICAL CONTRACTOR.

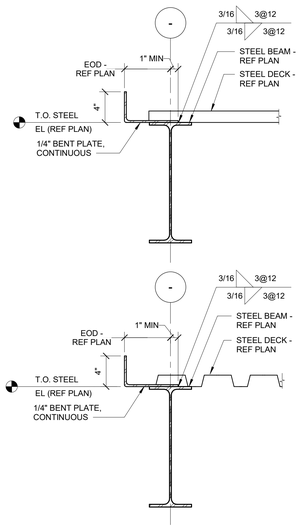

7 TYPICAL CLOSURE PLATE DETAIL

1 1/2" = 1'-0"

NOTES:

1. REFER TO PLAN FOR DECK ORIENTATION.

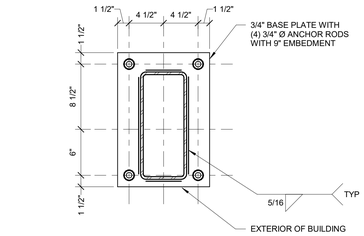

3 BASE PLATE (BP3) DETAIL

1 1/2" = 1'-0"

NOTES:

1. REFER TO TYPICAL ANCHOR ROD DETAIL FOR ADDITIONAL INFORMATION.
2. NO WELDS REQUIRED AT RADIUSES.

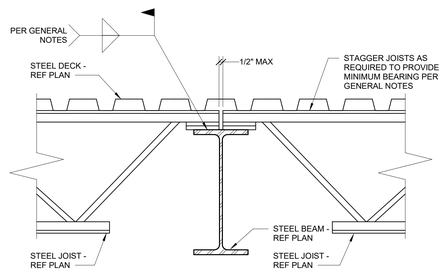

8 TYPICAL JOIST BEARING DETAIL

1 1/2" = 1'-0"

NOTES:

1. JOISTS AT OR IMMEDIATELY ADJACENT TO COLUMNS SHALL BE BOLTED WITH (2) BOLTS ON BEAM GAGE. REFER TO GENERAL NOTES FOR BOLT DIAMETER.

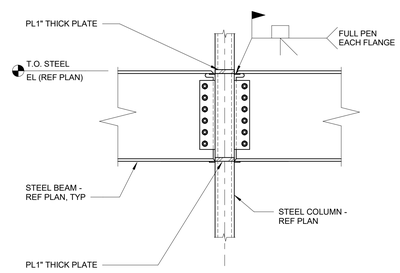

9 MOMENT CONNECTION DETAIL

3/4" = 1'-0"

NOTES:

1. DETAIL SIMILAR FOR MOMENT CONNECTION OF BEAMS IN OPPOSITE DIRECTION.
2. STIFFENER PLATE THICKNESS SHALL MATCH LARGER FLANGE THICKNESS OR CONNECTOR PLATE UNO.

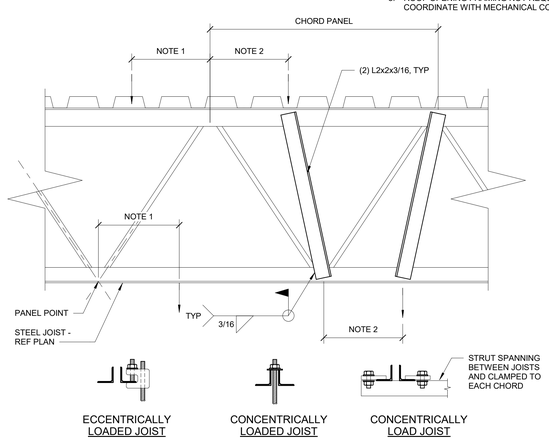

10 JOIST MODIFICATION DETAIL

1 1/2" = 1'-0"

NOTES:

1. FOR ATTACHMENTS TO JOISTS THAT ARE CONCENTRICALLY LOADED ON THE JOIST, A MAXIMUM OF 100 POUNDS MAY BE ATTACHED TO THE JOIST WITHIN A CHORD PANEL WITHOUT AN ADDITIONAL ANGLE. FOR ATTACHMENTS TO JOIST THAT ARE ECCENTRICALLY LOADED, A MAXIMUM OF 25 POUNDS MAY BE ATTACHED TO THE JOIST WITHIN A CHORD PANEL WITHOUT AN ADDITIONAL ANGLE. MULTIPLE ATTACHMENTS ARE ALLOWED IN EACH CHORD PANEL AS LONG AS THE SUM OF THE LOADS DO NOT EXCEED THE MAXIMUM LOAD INDICATED.
2. FOR LOADS BETWEEN 100 POUNDS AND 200 POUNDS, ADDITIONAL ANGLES ARE REQUIRED AND JOIST MUST BE CONCENTRICALLY LOADED.
3. FOR LOADING CONDITIONS IN NOTES 1 AND 2 ABOVE, TOTAL SUM OF LOADS SHALL NOT EXCEED 200 LBS FOR AN 8 FOOT SEGMENT OF JOIST. FOR LOADS GREATER THAN 200 POUNDS AND NOT NOTED ON THE DRAWINGS, CONTACT ENGINEER PRIOR TO INSTALLATION.
4. NO LOADS SHALL BE SUPPORTED FROM JOIST BRIDGING.

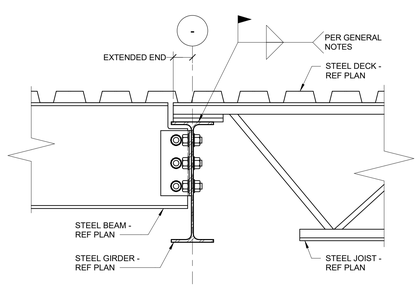

11 SECTION AT ROOF GIRDER

1 1/2" = 1'-0"

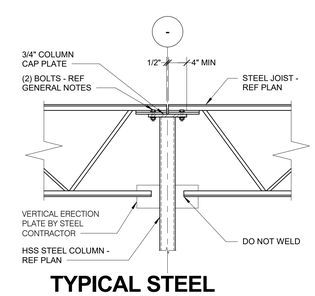

12 TYPICAL STEEL JOIST AT HSS COLUMN

3/4" = 1'-0"

NOTES:

1. GIRDER NOT SHOWN FOR CLARITY.
2. DECK NOT SHOWN FOR CLARITY.
3. CONNECTION SHOWN IS BASED ON STEEL JOIST INSTITUTE REQUIREMENTS FOR K-SERIES BAR JOISTS. CONNECTION DETAIL NOT APPLICABLE FOR LH-SERIES JOISTS OR JOIST GIRDERS.

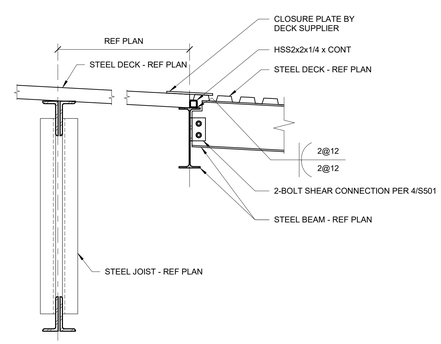

13 DECK DIRECTION CHANGE DETAIL

3/4" = 1'-0"

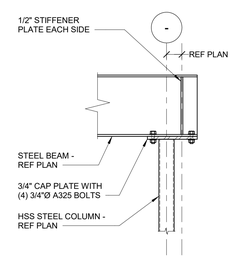

14 BEAM BEARING ON COLUMN

3/4" = 1'-0"

OPN ARCHITECTS
301 N BROOM STREET #100
MADISON, WI 53703
608-819-0260 PHONE
www.opnarchitects.com
opn@opnarchitects.com

All reports, plans, specifications, computer files, field data, notes and other documents and instruments prepared by OPN Architects, Inc. as instruments of service shall remain the property of OPN Architects, Inc. OPN Architects, Inc. shall retain all common law, statutory and other reserved rights, including the copyright thereto.

© 2017 OPN Architects, Inc.

Owner
City of Madison Fire Department
314 W. Dayton St.
Madison, WI 53703

Project
Madison Fire Station 14
3201 Dairy Drive
Madison, WI 53718

Civil Engineer
Snyder & Associates, Inc
5010 Voges Rd
Madison WI, 53718
P. 608-838-0444

Structural Engineer
IMEG
1800 Deming Way #200
Middleton, WI 53562
P. 608-223-9600

Mechanical Engineer
IMEG
1800 Deming Way #200
Middleton, WI 53562
P. 608-223-9600

Electrical Engineer
IMEG
1800 Deming Way #200
Middleton, WI 53562
P. 608-223-9600

Key Plan

Sheet Issue Date	
BID DOCUMENTS	11/03/17

Revision	Date

BID DOCUMENTS

Drawing
STEEL DETAILS

City of Madison Contract No. **8027**
OPN Project No. **17207000**

IMEG
1800 DEMING WAY, SUITE 200
MIDDLETON, WI 53562
608.223.9600 FAX: 608.836.0415
www.imegcorp.com
PROJECT # 170011A0.00

IMEG CORP. RESERVES PROPRIETARY RIGHTS, INCLUDING COPYRIGHTS, TO THIS DRAWING AND THE DATA SHOWN THEREON. SAID DRAWING AND/OR DATA ARE THE EXCLUSIVE PROPERTY OF IMEG CORP AND SHALL NOT BE USED OR REPRODUCED FOR ANY OTHER PROJECT WITHOUT THE EXPRESS WRITTEN APPROVAL AND PARTICIPATION OF IMEG CORP. © 2017 IMEG CORP.

REFERENCE SCALE IN INCHES
0 1 2 3

S501

PRINTED: 10/26/2017 4:45:24 PM

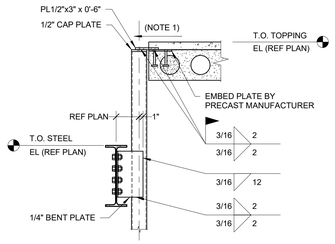

1 FRAMING DETAIL

3/4" = 1'-0"

NOTES:

1. PRECAST MANUFACTURER TO DESIGN EMBED FOR THE FOLLOWING UNFACTORED SERVICE LOADS: DEAD LOAD = 200 LB AND REVERSIBLE WIND LOAD = 1250 LB.
2. MASONRY WALL NOT SHOWN FOR CLARITY.

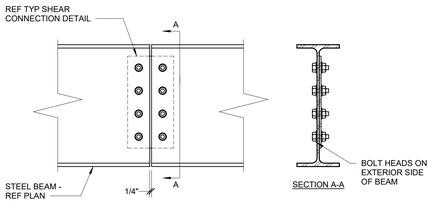

2 SPLICE DETAIL

1 1/2" = 1'-0"

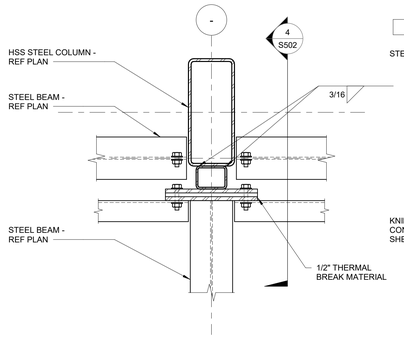

3 OVERHANG CONNECTION DETAIL

1 1/2" = 1'-0"

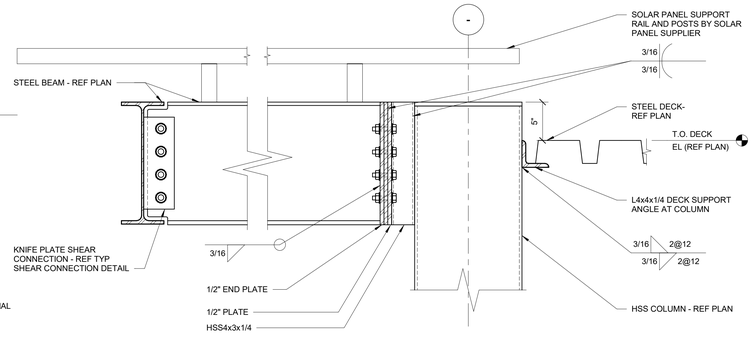

4 OVERHANG CONNECTION DETAIL

1 1/2" = 1'-0"

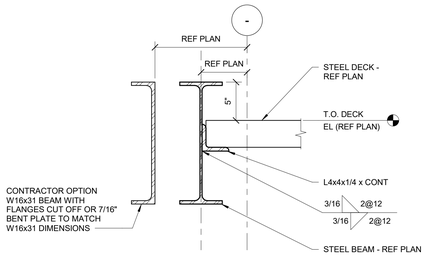

5 OVERHANG CONNECTION DETAIL

1 1/2" = 1'-0"

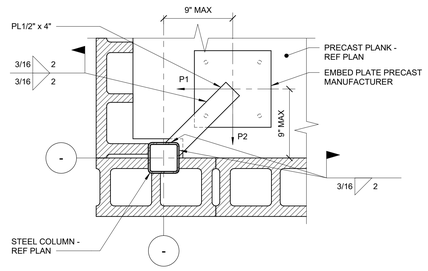

6 FRAMING DETAIL

1 1/2" = 1'-0"

NOTES:

1. P# INDICATES HORIZONTAL LOAD REQUIRED TO BRACE COLUMN. PRECAST MANUFACTURER TO DESIGN EMBED FOR THE FOLLOWING UNFACTORED SERVICE LOADS:

P1 - DEAD LOAD (1.0DL)	=	150 LB
LIVE LOAD (1.0LL)	=	125 LB
REVERSIBLE WIND LOAD (1.0WL)	=	425 LB
P2 - DEAD LOAD (1.0DL)	=	100 LB
REVERSIBLE WIND LOAD (1.0WL)	=	850 LB

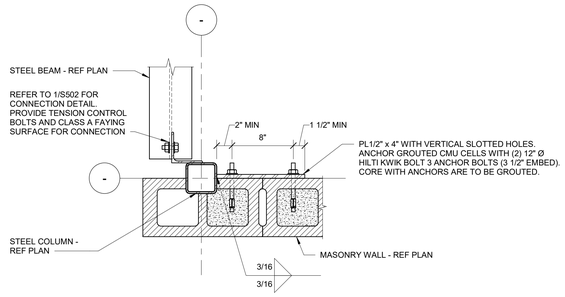

7 FRAMING DETAIL

1 1/2" = 1'-0"

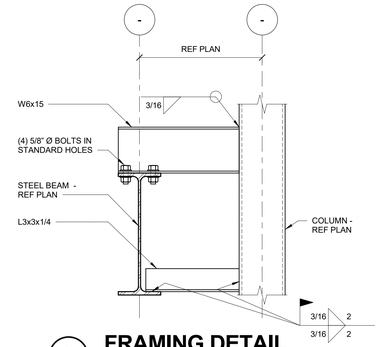

8 FRAMING DETAIL

1 1/2" = 1'-0"

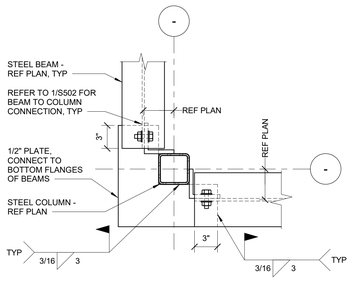

9 FRAMING DETAIL

1 1/2" = 1'-0"

NOTES:

1. MASONRY WALL NOT SHOWN FOR CLARITY.

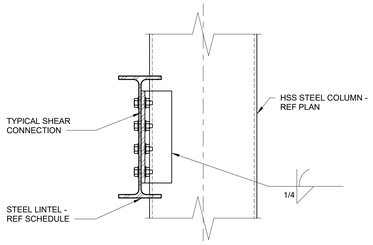

10 STEEL LINTEL CONNECTION DETAIL

1 1/2" = 1'-0"

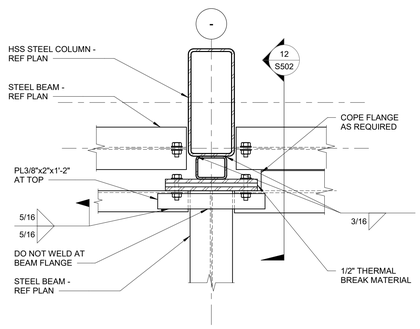

11 OVERHANG CONNECTION DETAIL

1 1/2" = 1'-0"

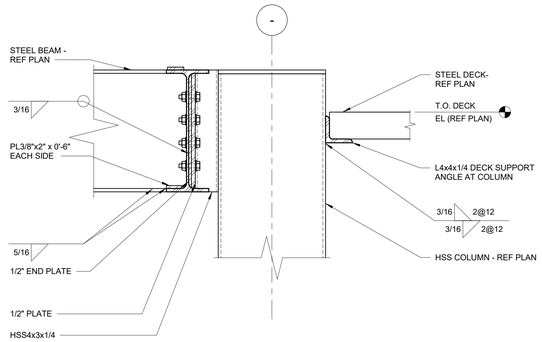

12 OVERHANG CONNECTION DETAIL

1 1/2" = 1'-0"

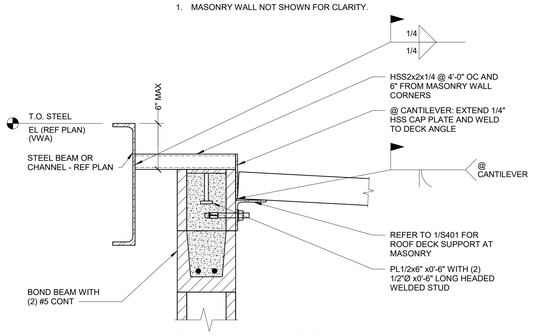

13 FRAMING DETAIL

1 1/2" = 1'-0"

NOTES:

1. AT SIM DECK SPAN IS PARALLEL TO WALL.
2. COORDINATE WITH DETAIL 1/S401 TO PREVENT OVERLAP OF HILTI FASTENERS AND HEADED WELDED STUDS.

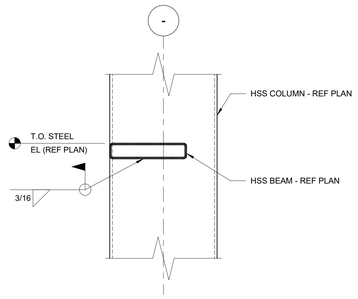

14 FRAMING DETAIL

1 1/2" = 1'-0"

NOTES:

1. ANY TEMPORARY ERECTION SEATS USED TO SUPPORT FRAMING SHALL BE REMOVED.

OPN ARCHITECTS
301 N BROOM STREET #100
MADISON, WI 53703
608-819-0260 PHONE
www.opnarchitects.com
opn@opnarchitects.com

All reports, plans, specifications, computer files, field data, notes and other documents and instruments prepared by OPN Architects, Inc. as instruments of service shall remain the property of OPN Architects, Inc. OPN Architects, Inc. shall retain all common law, statutory and other reserved rights, including the copyright thereto.

© 2017 OPN Architects, Inc.

Owner

City of Madison Fire Department
314 W. Dayton St.
Madison, WI 53703

Project

Madison Fire Station 14
3201 Dairy Drive
Madison, WI 53718

Civil Engineer

Snyder & Associates, Inc
5010 Voges Rd
Madison WI, 53718
P. 608-838-0444

Structural Engineer

IMEG
1800 Deming Way #200
Middleton, WI 53562
P. 608-223-9600

Mechanical Engineer

IMEG
1800 Deming Way #200
Middleton, WI 53562
P. 608-223-9600

Electrical Engineer

IMEG
1800 Deming Way #200
Middleton, WI 53562
P. 608-223-9600

Key Plan

Sheet Issue Date	
BID DOCUMENTS	11/03/17

Revision	Date

BID DOCUMENTS

Drawing

STEEL DETAILS

City of Madison Contract No. **8027**
OPN Project No. **17207000**

S502

IMEG
1800 DEMING WAY, SUITE 200
MIDDLETON, WI 53562
608.223.9600 FAX: 608.836.0415
www.imegcorp.com
PROJECT # 17001140.00

IMEG CORP RESERVES PROPRIETARY RIGHTS, INCLUDING COPYRIGHTS, TO THIS DRAWING AND THE DATA SHOWN THEREON. SAID DRAWING AND/OR DATA ARE THE EXCLUSIVE PROPERTY OF IMEG CORP AND SHALL NOT BE USED OR REPRODUCED FOR ANY OTHER PROJECT WITHOUT THE EXPRESS WRITTEN APPROVAL AND PARTICIPATION OF IMEG CORP. © 2017 IMEG CORP.

REFERENCE SCALE IN INCHES
0 1 2 3

VIEW KEY

NAME — LEVEL NAME
10' - 0" — HEIGHT ABOVE PROJECT 0' - 0"

(1) — INDICATES NOTE USED TO DESCRIBE ADDITIONAL INFORMATION ABOUT WORK REQUIRED, SPECIFIC TO THE SHEET AND/OR DETAIL

NORTH

INDICATES DIRECTION OF TRUE NORTH
PLAN OR DETAIL NUMBER
PLAN OR DETAIL NAME

1 **VIEW NAME**
1/8" = 1'-0"

PLAN OR DETAIL SCALE

SIM
1
M101

INDICATES SIMILAR DETAIL REFERENCED IN MULTIPLE LOCATIONS
DETAIL REFERRED TO BY SECTION CUT
SHEET DETAIL IS LOCATED ON

SIM
4 1 2 3
T101

INDICATES SIMILAR DETAIL REFERENCED IN MULTIPLE LOCATIONS
DETAIL REFERRED TO BY ELEVATION
SHEET DETAIL IS LOCATED ON

LINE TYPE KEY:

NEW WORK BY THIS CONTRACTOR (DARK SOLID LINE)
NEW WORK UNDERFLOOR OR UNDERGROUND BY THIS CONTRACTOR (DARK LONG DASHED LINE)
NEW WORK BY OTHERS (LIGHT SOLID LINE)

FIRE / SMOKE BARRIER DESIGNATIONS

REFER TO ARCHITECTURAL LIFE SAFETY PLANS FOR WALL AND FLOOR RATINGS.

CONTACT PERSONS:

DESCRIPTION:	PERSON:
PROJECT MANAGER	TIM PAAP
MECHANICAL ENGINEER	PAUL HANSEN
ELECTRICAL ENGINEER	TIM PAAP
TECHNOLOGY ENGINEER	GWEN BROMME
STRUCTURAL ENGINEER	ABBY PERTZBORN

CONTRACTOR ABBREVIATION KEY

ABBR:	DESCRIPTION:
T.C.C.	AUTOMATIC TEMPERATURE CONTROL CONTRACTOR
A.V.C.	AUDIO/VISUAL CONTRACTOR
C.C.	CIVIL CONTRACTOR
C.M.	CONSTRUCTION MANAGER
E.C.	ELECTRICAL CONTRACTOR
F.P.C.	FIRE PROTECTION CONTRACTOR
F.S.C.	FOOD SERVICE CONTRACTOR
G.C.	GENERAL CONTRACTOR
H.C.	HEATING CONTRACTOR
M.C.	MECHANICAL CONTRACTOR
P.C.	PLUMBING CONTRACTOR
S.C.	SECURITY CONTRACTOR
T.C.	TECHNOLOGY CONTRACTOR
T.C.C.	TEMPERATURE CONTROLS CONTRACTOR
V.C.	VENTILATION CONTRACTOR

MECHANICAL ABBREVIATION KEY

ABBR:	DESCRIPTION:
AD	ACCESS DOOR
AFF	ABOVE FINISHED FLOOR
C	COMMON
CO	CLEANOUT
CD-E	CEILING DIFFUSER - EXISTING
CFSD	CONTROL/FIRE/SMOKE DAMPER
DPG (0-2")	DIFFERENTIAL PRESSURE GAUGE (RANGE)
DPS	DIFFERENTIAL PRESSURE SWITCH
EA	EXHAUST/RELIEF AIR
FOB	FLAT ON BOTTOM
FOT	FLAT ON TOP
MA	MIXED AIR
MV	MIXING VALVE
NC	NEW CONNECTION
N.C.	NORMALLY CLOSED
NIC	NOT IN CONTRACT
N.O.	NORMALLY OPEN
OA	OUTSIDE AIR
PS	PRESSURE SWITCH
RA	RETURN AIR
SA	SUPPLY AIR
SD	SMOKE DAMPER
TAB	TERMINAL AIR BOX
TD	TRANSFER DUCT
TYP	TYPICAL
UNO	UNLESS NOTED OTHERWISE

MECHANICAL SYMBOL LIST

NOT ALL SYMBOLS MAY APPLY.

SYMBOL:	DESCRIPTION:
GV	GAS REGULATOR VENT
GWR	GEOTHERMAL WATER RETURN
GWS	GEOTHERMAL WATER SUPPLY
HWR	HEATING WATER RETURN
HWS	HEATING WATER SUPPLY
LIQ	REFRIGERANT LIQUID
SUC	REFRIGERANT SUCTION
	PIPE CAP
	PIPE DOWN
	PIPE UP OR UP/DOWN
	PITCH PIPE IN DIRECTION
	DIRECTION OF FLOW IN PIPE
	NEW CONNECTION
	UNION/FLANGE
	SHUTOFF VALVE NORMALLY OPEN
	SHUTOFF VALVE NORMALLY CLOSED
	THROTTLING VALVE
	BALANCING VALVE (NUMBER INDICATES GPM)
	AUTOMATIC BALANCING VALVE
	MIXING VALVE
	CONTROL VALVE (THREE-WAY)
	CONTROL VALVE (TWO-WAY)
S	SOLENOID VALVE
	CHECK VALVE
	SAFETY/RELIEF VALVE
	PRESSURE REDUCING VALVE (LIQUID/GAS)
	PRESSURE REDUCING VALVE (STEAM)
	PUMP
	VACUUM BREAKER
	"WYE" - STRAINER
	"WYE" - STRAINER W/SHUTOFF VALVE AND HOSE CONNECTION WITH CAP
	BASKET STRAINER
	FLEXIBLE CONNECTION
	PRESSURE/TEMPERATURE TEST PLUG
	REDUCER - REFERENCE SPECIFICATION FOR CONCENTRIC/ECCENTRIC AND FOT/FOB
	SUCTION DIFFUSER WITH SUPPORT FOOT
	AUTOMATIC AIR VENT
	MANUAL AIR VENT
	DRAIN VALVE WITH HOSE CONNECTION AND CAP
P	PRESSURE SENSOR (FURNISHED WITH BALL VALVE)
P	PRESSURE GAUGE (FURNISHED WITH BALL VALVE)
	DIFFERENTIAL PRESSURE SENSOR
SP	STATIC SWITCH
FM	FLOW METER
F	FLOW SWITCH
FS	FLOW SENSOR
M	METER

MECHANICAL SYMBOL LIST

NOT ALL SYMBOLS MAY APPLY.

SYMBOL:	DESCRIPTION:
	DIRECTION OF AIR FLOW
	FLEXIBLE DUCT
	MANUAL VOLUME DAMPER
R	RISE IN DIRECTION OF AIR FLOW
D	DROP IN DIRECTION OF AIR FLOW
	DUCT CAP
	DUCT DOWN
	DUCT UP
	SUPPLY/OUTSIDE AIR DUCT SECTION
	RETURN AIR DUCT SECTION
	EXHAUST/RELIEF AIR DUCT SECTION
	4-WAY DIFFUSER WITH BLANKOFF IN ONE DIRECTION
CD-1 6/115	AIR TERMINAL PROPERTIES SYMBOL NECK SIZE/CFM
###	TERMINAL AIR BOX (REFER TO SCHEDULE)
	OPPOSED BLADE DAMPER (REFER TO SCHEDULE)
	PARALLEL BLADE DAMPER (REFER TO SCHEDULE)
	DIFFERENTIAL PRESSURE SENSOR
H	HUMIDISTAT SENSOR
C	CARBON MONOXIDE SENSOR
C_2	CARBON DIOXIDE SENSOR
O	OCCUPANCY SENSOR
P	PRESSURE SENSOR/MONITOR
P	PRESSURE SENSOR (DUCT MOUNTED)
T	THERMOSTAT/SENSOR
T	TEMPERATURE SENSOR
T	THERMOSTAT/SENSOR WITH HEAVY DUTY ENCLOSURE
T	TEMPERATURE SENSOR WITH WELL
T	THERMOMETER WITH WELL (DIAL TYPE)
	THERMOMETER WITH WELL (FILLED TYPE)

PIPING GENERAL NOTES:

1. THE SIZE OF BRANCH PIPING TO TERMINAL HEATING DEVICES AND COILS SHALL BE 3/4" UNLESS NOTED OTHERWISE.
2. PIPE DRAIN LINES FROM EQUIPMENT TO NEAREST FLOOR DRAIN.
3. INSTALL ALL REFRIGERANT LIQUID AND SUCTION PIPING AND SIZE PER EQUIPMENT MANUFACTURER RECOMMENDATIONS.

VENTILATION GENERAL NOTES:

1. THE SIZE OF EACH BRANCH DUCT TO A TERMINAL AIR BOX (TAB) SHALL MATCH THE TAB'S INLET SIZE UNLESS THE BRANCH IS GREATER THAN 6 FEET IN LENGTH, THEN THE BRANCH SHOULD BE INCREASED ONE DUCT SIZE, OR AS OTHERWISE NOTED.
2. ALIGN TEMPERATURE SENSORS WITH LIGHT SWITCHES AND WHEN IN CLOSE PROXIMITY TO EACH OTHER.
3. PROVIDE ACCESS DOORS AT ALL DUCT MOUNTED EQUIPMENT.

MECHANICAL GENERAL NOTES:

THESE NOTES APPLY TO ALL MECHANICAL SHEETS AND TRADES, INCLUDING BUT NOT LIMITED TO, FIRE PROTECTION, PLUMBING, VENTILATION, PIPING AND TEMPERATURE CONTROL.

1. DRAWINGS SHOWING LOCATIONS OF EQUIPMENT, DUCTWORK, PIPING, ETC. ARE DIAGRAMMATIC AND MAY NOT ALWAYS REFLECT EXACT INSTALLATION CONDITIONS. DRAWINGS SHOW THE GENERAL ARRANGEMENT OF DUCTWORK, PIPING, EQUIPMENT, ETC., AND MAY NOT INCLUDE ALL OFFSETS AND FITTINGS REQUIRED FOR COMPLETE INSTALLATION. THE DRAWINGS SHALL BE FOLLOWED AS CLOSELY AS ACTUAL BUILDING CONSTRUCTION AND THE WORK OF OTHERS WILL PERMIT.
2. DO NOT SCALE DRAWINGS. VERIFY ALL DIMENSIONS AND CLEARANCES FROM ARCHITECTURAL, STRUCTURAL, SUBMITTALS, AND OTHER APPROPRIATE DRAWINGS OR PHYSICALLY AT SITE. REVIEW ALL DRAWINGS, INCLUDING THOSE OF OTHER TRADES.
3. COORDINATE ALL WORK WITH ALL OTHER TRADES PRIOR TO INSTALLATION TO PROVIDE CLEARANCES REQUIRED FOR OPERATION, MAINTENANCE, CODE COMPLIANCE, AND TO VERIFY NON-INTERFERENCE WITH OTHER WORK. DO NOT FABRICATE PRIOR TO VERIFICATION OF NECESSARY CLEARANCES FOR ALL TRADES. BRING ANY INTERFERENCES OR CONFLICTS TO THE ATTENTION OF THE ARCHITECT/ENGINEER BEFORE PROCEEDING WITH FABRICATION OR EQUIPMENT ORDERS.
4. REVIEW SPACE REQUIREMENTS OF EQUIPMENT SPECIFIED OR SUBSTITUTED AND MAKE REASONABLE ACCOMMODATIONS IN LAYOUT AND POSITIONING TO PROVIDE PROPER ACCESS.
5. ANY CHANGES REQUIRED TO ELIMINATE CONFLICTS OR THAT RESULT FROM A FAILURE TO COORDINATE SHALL BE MADE BY THE CONTRACTOR WITHOUT ADDITIONAL COST OR EXPENSE TO OTHERS.
6. EACH CONTRACTOR IS RESPONSIBLE FOR ALL COSTS ASSOCIATED WITH ELECTRICAL CHANGES REQUIRED FOR EQUIPMENT PROPOSED THAT DIFFERS FROM THE BASIS OF DESIGN.
7. REFER TO ARCHITECTURAL REFLECTED CEILING PLAN, ELECTRICAL, TECHNOLOGY AUDIO/VISUAL, AND OTHER MECHANICAL PLANS FOR EXACT LOCATIONS OF ALL CEILING MOUNTED DEVICES, OTHER THAN SPRINKLERS.
8. EACH CONTRACTOR IS RESPONSIBLE FOR DAMAGE CAUSED BY THEIR ACTIONS TO WALLS, FLOORS, CEILINGS, AND ROOFS. THE CONTRACTOR WHOSE WORK CAUSES DAMAGE IS RESPONSIBLE FOR PATCHING TO MATCH ORIGINAL CONSTRUCTION, FIRE RATING, AND FINISH.
9. IN AREAS WITH DRYWALL CEILINGS COORDINATE LOCATIONS OF ACCESS PANELS WITH THE GC FOR ACCESS TO VALVES, DUCTWORK ACCESSORIES, DAMPERS, ETC. COORDINATE PANEL TYPE AND COLOR WITH ARCHITECT. NOTIFY THE GC OF THE REQUIRED ACCESS PANELS PRIOR TO BIDDING
10. SEAL ALL FLOOR, WALL, AND ROOF PENETRATIONS AIRTIGHT WHERE CONDUITS, PIPING, AND DUCTS PENETRATE. PENETRATIONS THROUGH EXTERIOR WALLS AND ROOF SHALL BE SEALED AIRTIGHT WITH WATERPROOFING MATERIALS RECOMMENDED BY MANUFACTURER FOR OUTDOOR USE.
11. CAULK ALL PIPE AND DUCT PENETRATIONS OF FULL HEIGHT NON-FIRE RATED WALL, PARTITION, FLOOR, AND ROOF ASSEMBLIES. THIS IS ESSENTIAL TO PREVENT NOISE TRANSMISSION FROM ONE ROOM TO ANOTHER AND TO PROVIDE THE DESIRED NC LEVELS WITHIN ROOMS.
12. WHERE PIPES AND DUCTS ARE SHOWN TO PENETRATE FLOORS, PROVIDE SLEEVED OPENINGS WITH THE TOP EDGE RAISED ABOVE FLOOR SURFACE IN ACCORDANCE WITH ALL RELEVANT SPEC SECTIONS. SEAL SLEEVE PERIMETER TO BE WATERTIGHT.
13. EQUIPMENT SIZES AND SERVICE CLEARANCE REQUIREMENTS VARY BETWEEN DIFFERENT MANUFACTURERS. CONSULT APPROVED SHOP DRAWINGS FOR EQUIPMENT SIZES AND REQUIRED SERVICE CLEARANCES. COORDINATE WITH LAYOUT OF EQUIPMENT PADS, PIPING, DUCTWORK, ETC.
14. DO NOT BLOCK TUBE PULL OR EQUIPMENT SERVICE CLEARANCES.
15. MAINTAIN MINIMUM 3'-6" CLEARANCE IN FRONT OF ALL ELECTRICAL PANELS, MOTOR STARTERS, SWITCHES, AND DISCONNECTS.
16. PROVIDE CONCRETE EQUIPMENT PAD FOR ALL FLOOR MOUNTED EQUIPMENT. PAD SHALL EXTEND MINIMUM 6" BEYOND ALL SIDES OF EQUIPMENT.
17. DO NOT SUPPORT EQUIPMENT, PIPING, OR DUCTWORK FROM METAL DECKING OR OTHER NON-STRUCTURAL BUILDING ELEMENTS. ANCHORS EMBEDDED IN CONCRETE SHALL BE CRACKED CONCRETE APPROVED IN ACCORDANCE WITH SPECIFICATIONS.

MECHANICAL SHEET INDEX

Sheet Number	Sheet Name
M000	COVER SHEET - MECHANICAL
M050	SITE PLAN - MECHANICAL
M101	FLOOR PLAN LEVEL 1 - VENTILATION
M102	MEZZANINE PLAN - VENTILATION
M103	ROOF PLAN - MECHANICAL
M201	FLOOR PLAN LEVEL 1 - PIPING
M202	MEZZANINE PLAN - PIPING
M300	ENLARGED PLANS AND SECTIONS - MECHANICAL
M301	ISOMETRIC VIEW - MECHANICAL
M350	FLOW DIAGRAM - MECHANICAL
M351	FLOW DIAGRAM - MECHANICAL
M400	DETAILS - MECHANICAL
M401	DETAILS - MECHANICAL
M402	DETAILS - MECHANICAL
M403	DETAILS - MECHANICAL
M404	DETAILS - MECHANICAL
M450	CONTROL DIAGRAMS - MECHANICAL
M451	CONTROL DIAGRAMS - MECHANICAL
M452	CONTROL DIAGRAMS - MECHANICAL
M453	CONTROL DIAGRAMS - MECHANICAL
M454	CONTROL DIAGRAMS - MECHANICAL
M500	SCHEDULES - MECHANICAL
M501	SCHEDULES - MECHANICAL

IMEG
1800 DEMING WAY, SUITE 200
MIDDLETON, WI 53562
608.223.9600 FAX: 608.836.0415
www.imegcorp.com
PROJECT # 170011400.00

IMEG CORP RESERVES PROPRIETARY RIGHTS, INCLUDING COPYRIGHTS, TO THIS DRAWING AND THE DATA SHOWN THEREON. SAID DRAWING AND/OR DATA ARE THE EXCLUSIVE PROPERTY OF IMEG CORP AND SHALL NOT BE USED OR REPRODUCED FOR ANY OTHER PROJECT WITHOUT THE EXPRESS WRITTEN APPROVAL AND PARTICIPATION OF IMEG CORP. © 2017 IMEG CORP.

REFERENCE SCALE IN INCHES
0 1 2 3

OPN ARCHITECTS
301 N BROOM STREET #100
MADISON, WI 53703
608-819-0260 PHONE
www.opnarchitects.com
opn@opnarchitects.com

All reports, plans, specifications, computer files, field data, notes and other documents and instruments prepared by OPN Architects, Inc. as instruments of service shall remain the property of OPN Architects, Inc. OPN Architects, Inc. shall retain all common law, statutory and other reserved rights, including the copyright thereto.

© 2017 OPN Architects, Inc.

Owner
City of Madison Fire Department
314 W. Dayton St.
Madison, WI 53703

Project
Madison Fire Station 14
3201 Dairy Drive
Madison, WI 53718

Civil Engineer
Snyder & Associates, Inc
5010 Voges Rd
Madison WI, 53718
P. 608-838-0444

Structural Engineer
IMEG
1800 Deming Way #200
Middleton, WI 53562
P. 608-223-9600

Mechanical Engineer
IMEG
1800 Deming Way #200
Middleton, WI 53562
P. 608-223-9600

Electrical Engineer
IMEG
1800 Deming Way #200
Middleton, WI 53562
P. 608-223-9600

Key Plan

Sheet Issue Date
BID DOCUMENTS 11/03/17

Revision Date

Drawing
COVER SHEET - MECHANICAL

City of Madison Contract No. **8027**
OPN Project No. **17207000**

M000

GENERAL NOTES:

1. ALL EXTERIOR GWS/GWR PIPING SHALL HAVE AT LEAST 6'-0" OF COVER.

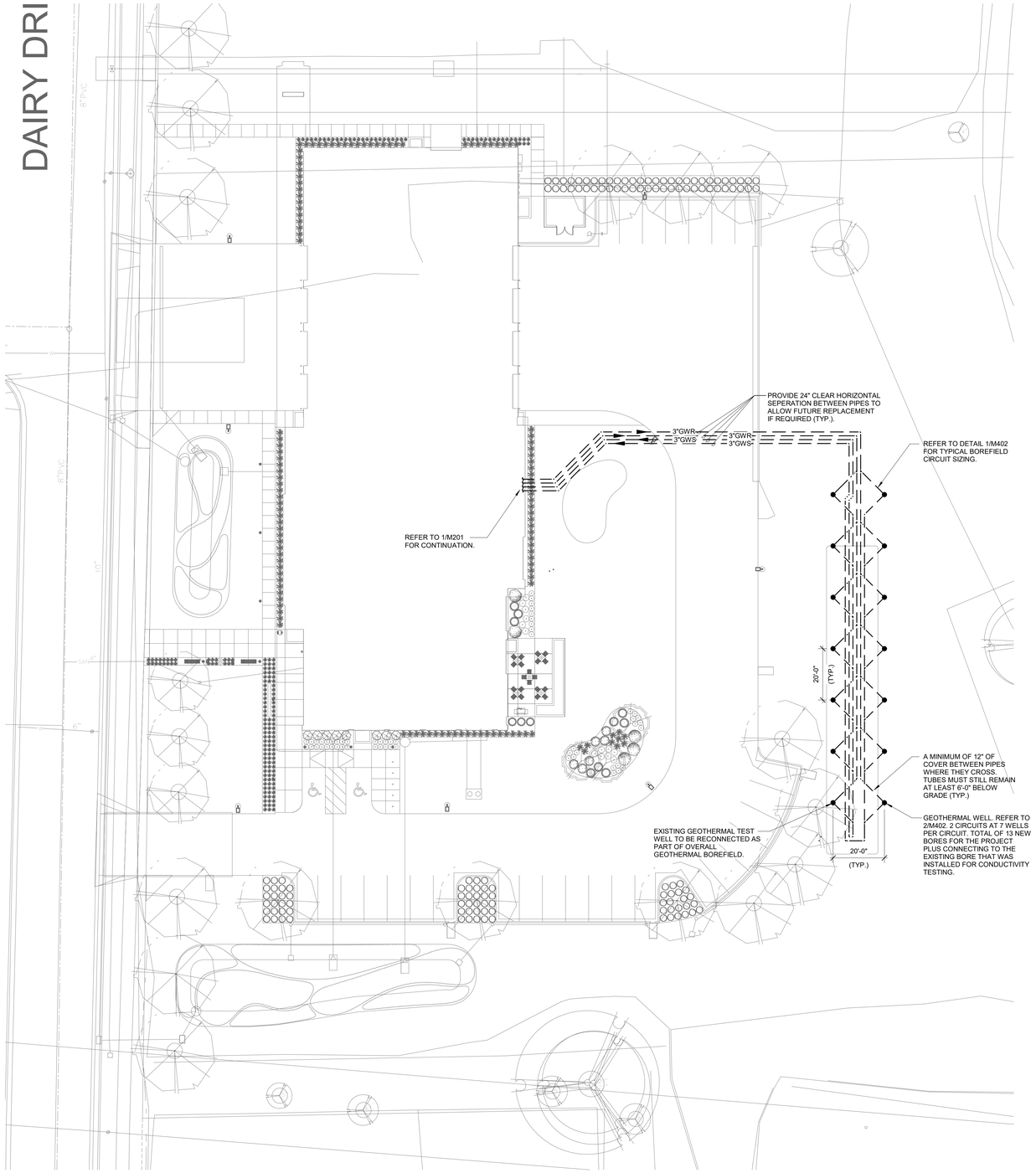

NORTH

1 SITE PLAN - MECHANICAL

1" = 20'-0"

OPN ARCHITECTS

301 N BROOM STREET #100
MADISON, WI 53703
608-819-0260 PHONE
www.opnarchitects.com
opn@opnarchitects.com

All reports, plans, specifications, computer files, field data, notes and other documents and instruments prepared by OPN Architects, Inc. as instruments of service shall remain the property of OPN Architects, Inc. OPN Architects, Inc. shall retain all common law, statutory and other reserved rights, including the copyright thereto.

© 2017 OPN Architects, Inc.

Owner

City of Madison Fire Department
314 W. Dayton St.
Madison, WI 53703

Project

Madison Fire Station 14
3201 Dairy Drive
Madison, WI 53718

Civil Engineer

Snyder & Associates, Inc
5010 Voges Rd
Madison WI, 53718
P. 608-838-0444

Structural Engineer

IMEG
1800 Deming Way #200
Middleton, WI 53562
P. 608-223-9600

Mechanical Engineer

IMEG
1800 Deming Way #200
Middleton, WI 53562
P. 608-223-9600

Electrical Engineer

IMEG
1800 Deming Way #200
Middleton, WI 53562
P. 608-223-9600

Key Plan

Sheet Issue Date

BID DOCUMENTS 11/03/17

Revision	Date

IMEG
1800 DEMING WAY, SUITE 200
MIDDLETON, WI 53562
608.223.9600 FAX: 608.836.0415
www.imegcorp.com
PROJECT # 170011400.00

IMEG CORP RESERVES PROPRIETARY RIGHTS, INCLUDING COPYRIGHTS, TO THIS DRAWING AND THE DATA SHOWN THEREON. SAID DRAWING AND/OR DATA ARE THE EXCLUSIVE PROPERTY OF IMEG CORP AND SHALL NOT BE USED OR REPRODUCED FOR ANY OTHER PURPOSE WITHOUT THE EXPRESS WRITTEN APPROVAL AND PARTICIPATION OF IMEG CORP. © 2017 IMEG CORP.

REFERENCE SCALE IN INCHES

0 1 2 3

Drawing

SITE PLAN - MECHANICAL

City of Madison Contract No. **8027**
OPN Project No. **17207000**

M050

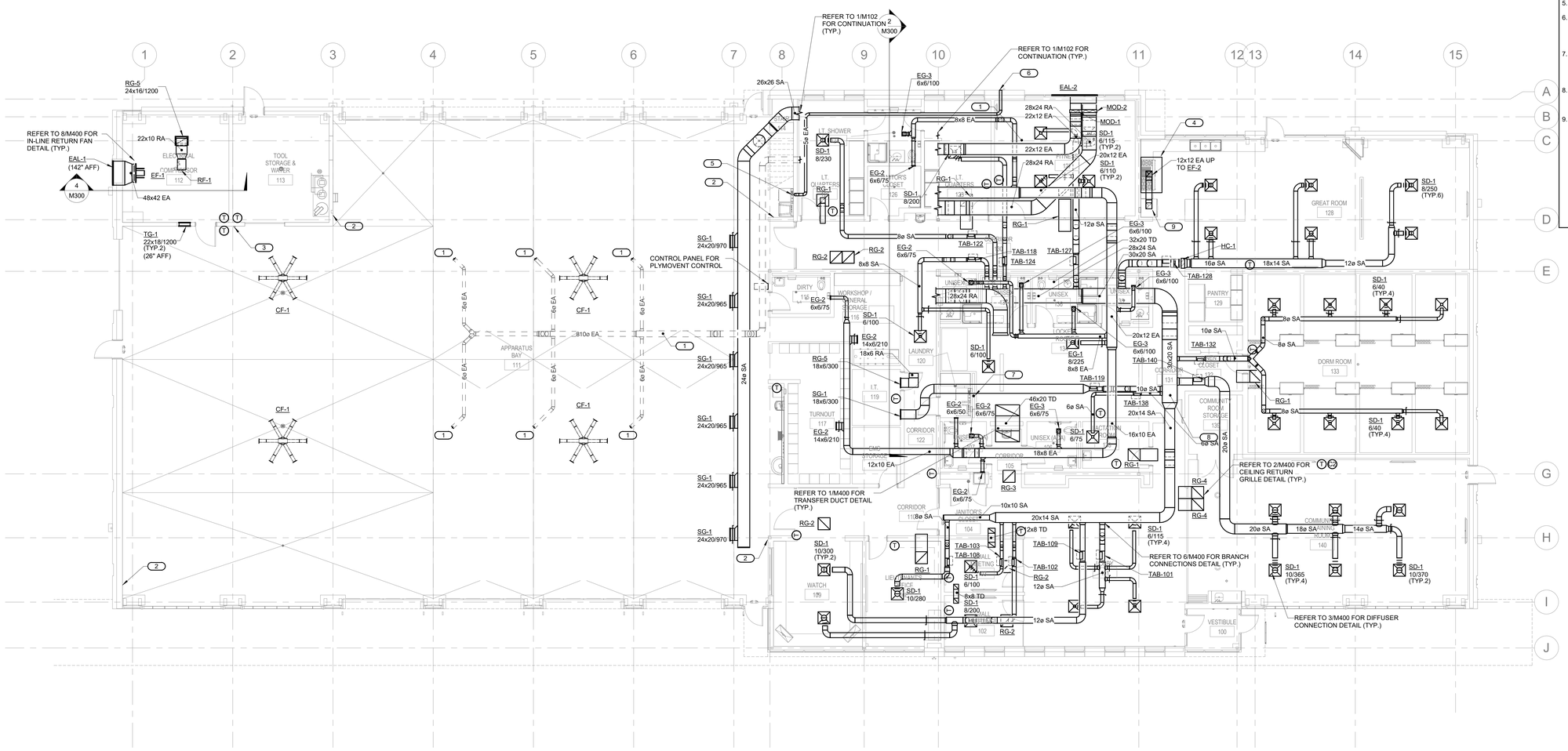

1 FLOOR PLAN LEVEL 1 - VENTILATION

1/8" = 1'-0"

NORTH

KEYNOTES: #

1. OWNER FURNISHED AND OWNER INSTALLED PLYMOVENT VEHICLE EXHAUST SYSTEM. COORDINATE ROUTING OF UTILITIES WITH OWNER AND THE INSTALLING CONTRACTOR.
2. PROVIDE CO/NOX SENSOR FOR CONTROL OF APPARATUS BAY EXHAUST SYSTEM. REFER TO 1/M453 FOR ADDITIONAL INFORMATION.
3. INSTALL LOCAL FAN CONTROLLERS FOR GROUPS OF CEILING FANS SERVING APPARATUS BAY. ONE FAN CONTROLLER SHALL SERVE FOUR DESTRATIFICATION FANS (CF-1). LABEL CONTROLLERS WITH NAMEPLATE AS "CEILING FANS". REFER TO CEILING FAN SPECIFICATIONS AND CONTROL SEQUENCES FOR ADDITIONAL REQUIREMENTS ON CONTROL OF THE DESTRATIFICATION FANS.
4. DIVISION 23 CONTRACTOR TO PROVIDE TYPE 1 KITCHEN EXHAUST HOOD. BASIS OF DESIGN IS CAPTIVEAIR MODEL 4224ND-2 THAT IS 72" LONG X 42" DEEP. BASIS OF DESIGN IS 1050 CFM UNIT AT 0.75" STATIC PRESSURE. RANGE BASIS OF DESIGN IS BLUE STAR RNB606GV2. REFER TO SPECIFICATION 23 37 00 FOR ADDITIONAL CONSTRUCTION REQUIREMENTS ON THE HOOD AND DSPS SUBMITTAL REQUIREMENTS. CONTRACTOR RESPONSIBLE FOR ANY MODIFICATIONS TO AIRFLOWS BASED ON FINAL KITCHEN HOOD SELECTION. HOOD SHALL BACK AND SHALL INCLUDE INSULATION TO MEET ZERO INCH REQUIREMENTS FOR CLEARANCE TO COMBUSTIBLE SURFACES PER MECHANICAL CODE.
5. PROVIDE DRYER BOX "DB" STYLE DRYER BOX AT DRYER CONNECTION.
6. PROVIDE COMMERCIAL GRADE DRYER EXHAUST VENT. UNIT SHALL BE ALUMINUM CONSTRUCTION WITH INTEGRAL DAMPER. FAMCO OR APPROVED EQUAL.
7. PROVIDE DRYER BOX "DB" STYLE DRYER BOX AT DRYER CONNECTION. ROUTE 4" DRYER EXHAUST AIR TO ROOF. REFER TO M103 FOR CONTINUATION.
8. LOCATE DIFFERENTIAL PRESSURE SENSOR FOR CONTROL OF SUPPLY FAN SPEED IN AN ACCESSIBLE LOCATION IN THIS AREA.
9. ROUTE GREASE EXHAUST DUCTWORK BETWEEN GREASE EXHAUST FAN ON ROOF AND TYPE 1 KITCHEN HOOD. REFER TO SPECIFICATION 23 31 00 FOR GREASE EXHAUST DUCTWORK REQUIREMENTS. PROVIDE 2 HOUR FIRE WRAP TYPE F INSULATION PER SPECIFICATION 23 07 13 BETWEEN HOOD CONNECTION AND EXHAUST FAN. SLOPE DUCTWORK WITH MINIMUM PITCH OF 0.25" PER FOOT IN ACCORDANCE WITH MEHCANICAL CODE. PROVIDE DUCT ACCESS CLEANOUTS AT ALL ELBOWS AND PER MECHANICAL CODE REQUIREMENTS.

OPN ARCHITECTS

301 N BROOM STREET #100
MADISON, WI 53703
608-819-0260 PHONE
www.opnarchitects.com
opn@opnarchitects.com

All reports, plans, specifications, computer files, field data, notes and other documents and instruments prepared by OPN Architects, Inc. as instruments of service shall remain the property of OPN Architects, Inc. OPN Architects, Inc. shall retain all common law, statutory and other reserved rights, including the copyright thereto.

© 2017 OPN Architects, Inc.

Owner

City of Madison Fire Department
314 W. Dayton St.
Madison, WI 53703

Project

Madison Fire Station 14
3201 Dairy Drive
Madison, WI 53718

Civil Engineer

Snyder & Associates, Inc
5010 Voges Rd
Madison WI, 53718
P. 608-838-0444

Structural Engineer

IMEG
1800 Deming Way #200
Middleton, WI 53562
P. 608-223-9600

Mechanical Engineer

IMEG
1800 Deming Way #200
Middleton, WI 53562
P. 608-223-9600

Electrical Engineer

IMEG
1800 Deming Way #200
Middleton, WI 53562
P. 608-223-9600

Key Plan

Sheet Issue Date	
BID DOCUMENTS	11/03/17

Revision	Date
PR REV	11/1/2017

IMEG
1800 DEMING WAY, SUITE 200
MIDDLETON, WI 53562
608.223.9600 FAX: 608.836.0415
www.imegcorp.com
PROJECT # 17001140.00

IMEG CORP RESERVES PROPRIETARY RIGHTS, INCLUDING COPYRIGHTS, TO THIS DRAWING AND THE DATA SHOWN THEREON. SAID DRAWING AND/OR DATA ARE THE EXCLUSIVE PROPERTY OF IMEG CORP AND SHALL NOT BE USED OR REPRODUCED FOR ANY OTHER PROJECT WITHOUT THE EXPRESS WRITTEN APPROVAL AND PARTICIPATION OF IMEG CORP. © 2017 IMEG CORP.

REFERENCE SCALE IN INCHES
0 1 2 3

Drawing

FLOOR PLAN LEVEL 1 - VENTILATION

City of Madison Contract No. **8027**
OPN Project No. **17207000**

M101

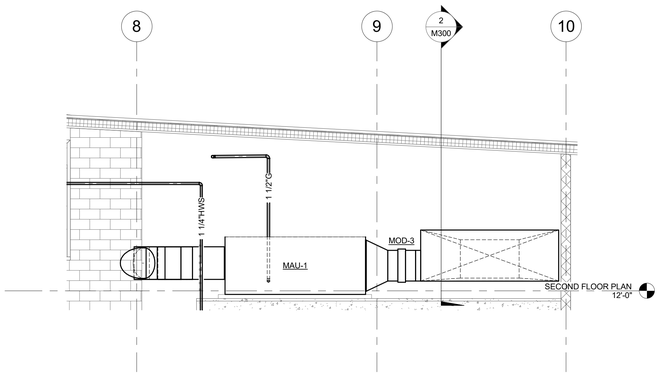

2 SECTION FOR MAU - MECHANICAL

1/4" = 1'-0"

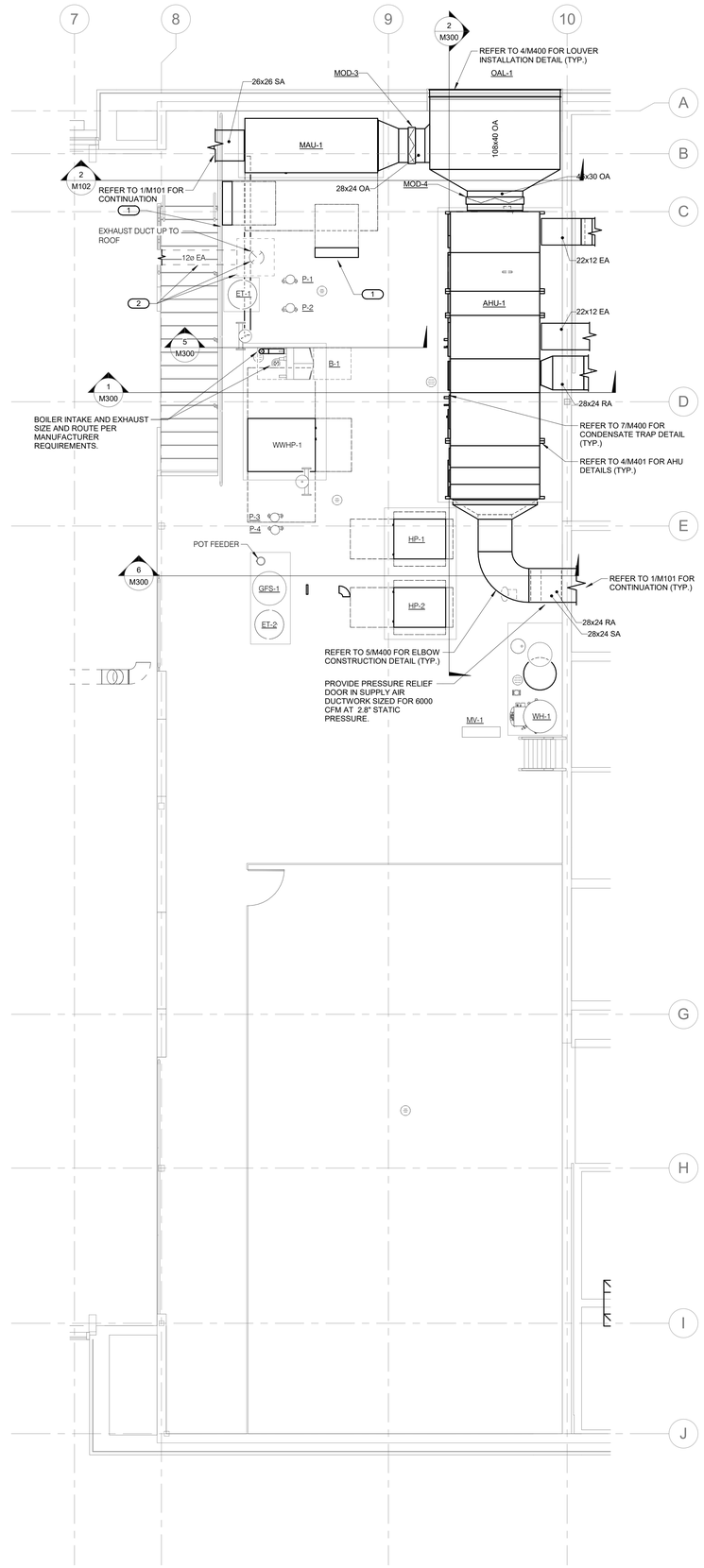

1 MEZZANINE PLAN - VENTILATION

1/4" = 1'-0"

NORTH

KEYNOTES: (#)

1. DDC CONTROL PANEL. MOUNT CONTROL PANEL ON UNISTRUT SUPPORT SYSTEM FROM FLOOR TO ROOF STRUCTURE.
2. OWNER FURNISHED AND OWNER INSTALLED PLYMOVENT VEHICLE EXHAUST SYSTEM. COORDINATE ROUTING OF UTILITIES WITH OWNER AND THE INSTALLING CONTRACTOR.

OPN ARCHITECTS

301 N BROOM STREET #100
MADISON, WI 53703
608-819-0260 PHONE
www.opnarchitects.com
opn@opnarchitects.com

All reports, plans, specifications, computer files, field data, notes and other documents and instruments prepared by OPN Architects, Inc. as instruments of service shall remain the property of OPN Architects, Inc. OPN Architects, Inc. shall retain all common law, statutory and other reserved rights, including the copyright thereto.

© 2017 OPN Architects, Inc.

Owner

City of Madison Fire Department

314 W. Dayton St.
Madison, WI 53703

Project

Madison Fire Station 14

3201 Dairy Drive
Madison, WI 53718

Civil Engineer

Snyder & Associates, Inc

5010 Voges Rd
Madison WI, 53718
P. 608-838-0444

Structural Engineer

IMEG

1800 Deming Way #200
Middleton, WI 53562
P. 608-223-9600

Mechanical Engineer

IMEG

1800 Deming Way #200
Middleton, WI 53562
P. 608-223-9600

Electrical Engineer

IMEG

1800 Deming Way #200
Middleton, WI 53562
P. 608-223-9600

Key Plan

Sheet Issue Date

BID DOCUMENTS 11/03/17

Revision	Date

IMEG

1800 DEMING WAY, SUITE 200
MIDDLETON, WI 53562
608.223.9600 FAX: 608.836.0415
www.imegcorp.com
PROJECT # 17001140.00

IMEG CORP RESERVES PROPRIETARY RIGHTS, INCLUDING COPYRIGHTS, TO THIS DRAWING AND THE DATA SHOWN THEREON. SAID DRAWING AND/OR DATA ARE THE EXCLUSIVE PROPERTY OF IMEG CORP AND SHALL NOT BE USED OR REPRODUCED FOR ANY OTHER PROJECT WITHOUT THE EXPRESS WRITTEN APPROVAL AND PARTICIPATION OF IMEG CORP. © 2017 IMEG CORP.

REFERENCE SCALE IN INCHES

0 1 2 3

Drawing

MEZZANINE PLAN - VENTILATION

City of Madison Contract No. **8027**
OPN Project No. **17207000**

M102

KEYNOTES: (#)

1. MAINTAIN AT LEAST 10' SEPERATION FROM FAN TO ROOF EDGE.

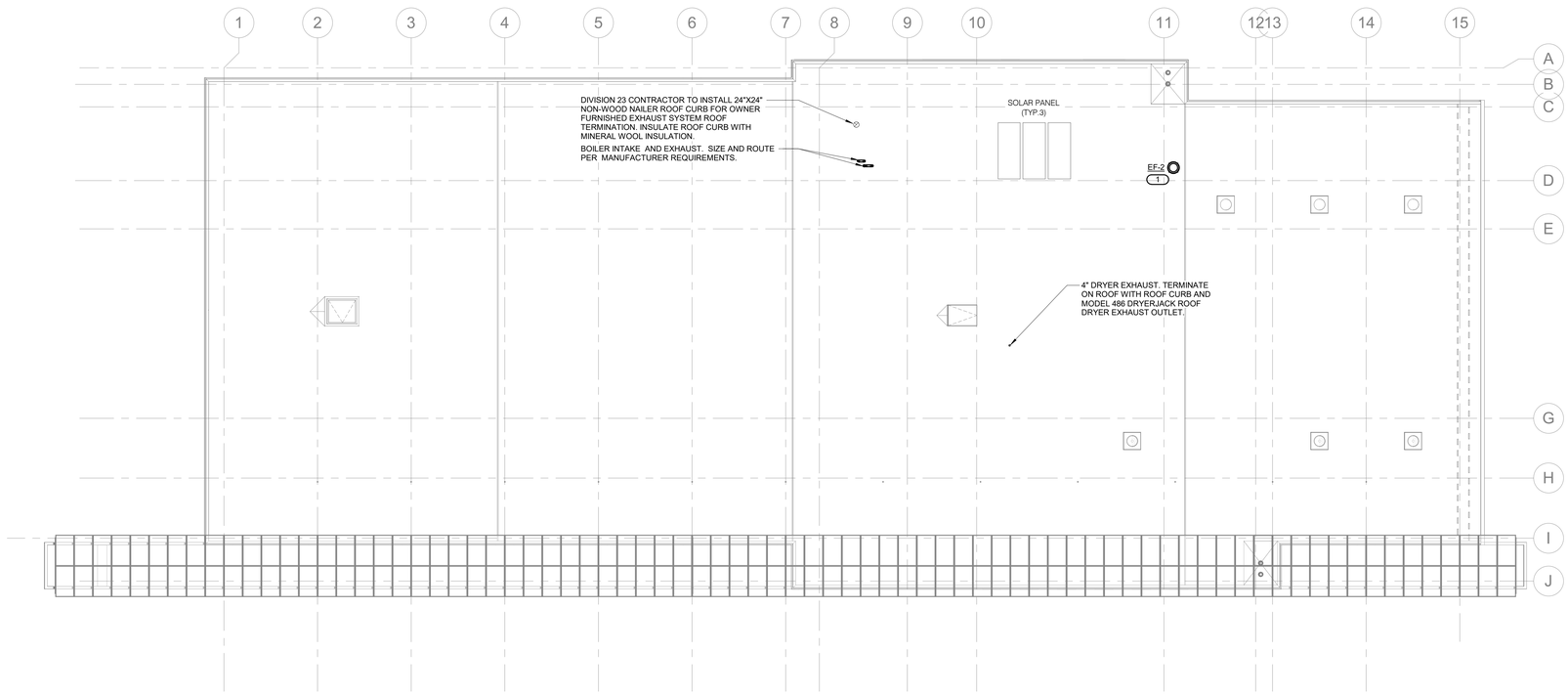

NORTH

1 ROOF PLAN - MECHANICAL

3/32" = 1'-0"

OPN ARCHITECTS

301 N BROOM STREET #100
MADISON, WI 53703
608-819-0260 PHONE
www.opnarchitects.com
opn@opnarchitects.com

All reports, plans, specifications, computer files, field data, notes and other documents and instruments prepared by OPN Architects, Inc. as instruments of service shall remain the property of OPN Architects, Inc. OPN Architects, Inc. shall retain all common law, statutory and other reserved rights, including the copyright thereto.

© 2017 OPN Architects, Inc.

Owner

City of Madison Fire Department
314 W. Dayton St.
Madison, WI 53703

Project

Madison Fire Station 14
3201 Dairy Drive
Madison, WI 53718

Civil Engineer

Snyder & Associates, Inc
5010 Voges Rd
Madison WI, 53718
P. 608-838-0444

Structural Engineer

IMEG
1800 Deming Way #200
Middleton, WI 53562
P. 608-223-9600

Mechanical Engineer

IMEG
1800 Deming Way #200
Middleton, WI 53562
P. 608-223-9600

Electrical Engineer

IMEG
1800 Deming Way #200
Middleton, WI 53562
P. 608-223-9600

Key Plan

Sheet Issue Date

BID DOCUMENTS	11/03/17

Revision | Date

IMEG
1800 DEMING WAY, SUITE 200
MIDDLETON, WI 53562
608.223.9600 FAX: 608.836.0415
www.imegcorp.com
PROJECT # 17001140.00

IMEG CORP RESERVES PROPRIETARY RIGHTS, INCLUDING COPYRIGHTS, TO THIS DRAWING AND THE DATA SHOWN THEREON. SAID DRAWING AND/OR DATA ARE THE EXCLUSIVE PROPERTY OF IMEG CORP AND SHALL NOT BE USED OR REPRODUCED FOR ANY OTHER PROJECT WITHOUT THE EXPRESS WRITTEN APPROVAL AND PARTICIPATION OF IMEG CORP. © 2017 IMEG CORP.

REFERENCE SCALE IN INCHES

0 1 2 3

Drawing

ROOF PLAN - MECHANICAL

City of Madison Contract No. **8027**
OPN Project No. **17207000**

M103

KEYNOTES: (#)

1. UNIT HEATER MOUNTED ABOVE STORAGE ROOM TO SERVE APPARATUS BAY.

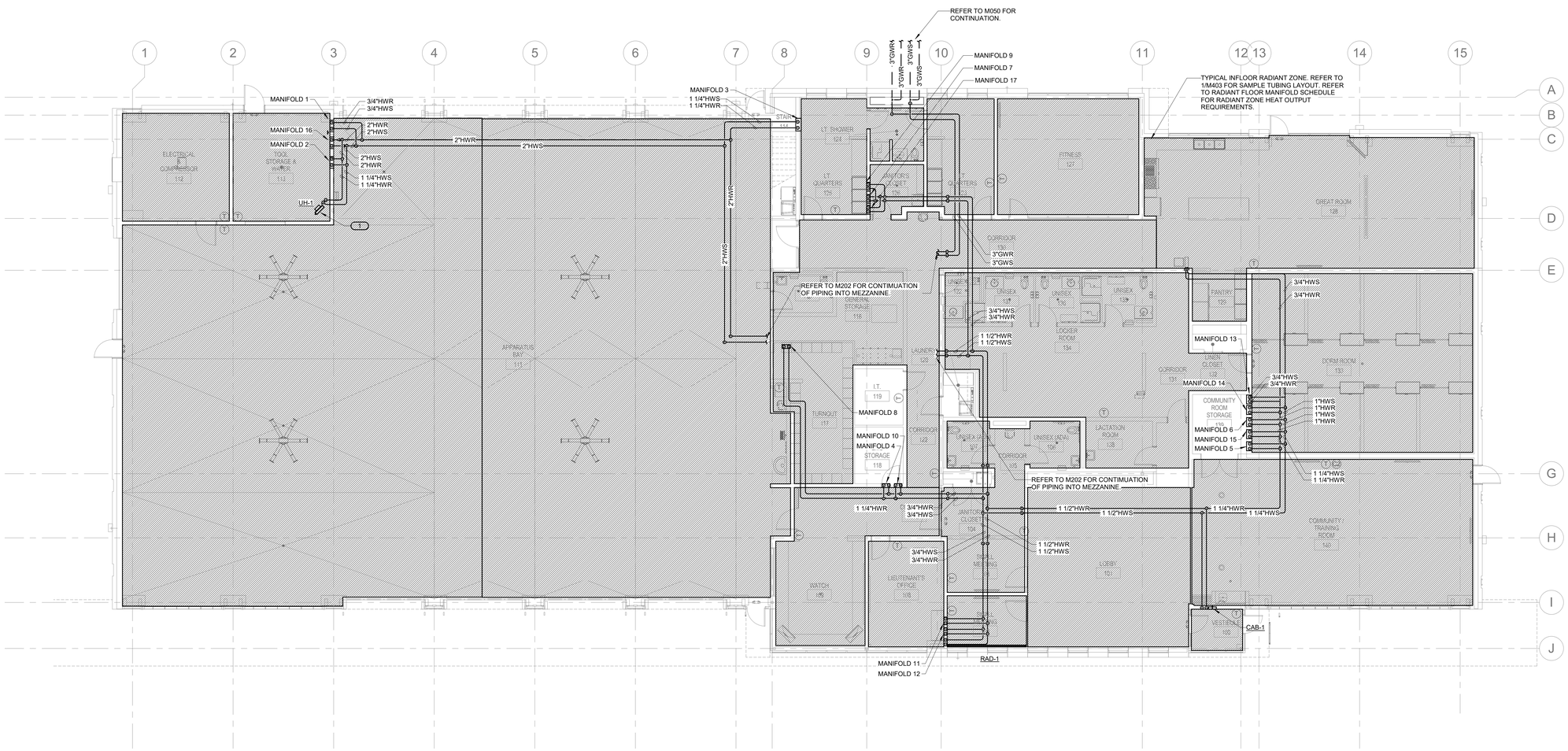

1 FLOOR PLAN LEVEL 1 - PIPING

1/8" = 1'-0"

OPN ARCHITECTS

301 N BROOM STREET #100
MADISON, WI 53703
608-819-0260 PHONE
www.opnarchitects.com
opn@opnarchitects.com

All reports, plans, specifications, computer files, field data, notes and other documents and instruments prepared by OPN Architects, Inc. as instruments of service shall remain the property of OPN Architects, Inc. OPN Architects, Inc. shall retain all common law, statutory and other reserved rights, including the copyright thereto.

© 2017 OPN Architects, Inc.

Owner

City of Madison Fire Department
314 W. Dayton St.
Madison, WI 53703

Project

Madison Fire Station 14
3201 Dairy Drive
Madison, WI 53718

Civil Engineer

Snyder & Associates, Inc
5010 Voges Rd
Madison WI, 53718
P. 608-838-0444

Structural Engineer

IMEG
1800 Deming Way #200
Middleton, WI 53562
P. 608-223-9600

Mechanical Engineer

IMEG
1800 Deming Way #200
Middleton, WI 53562
P. 608-223-9600

Electrical Engineer

IMEG
1800 Deming Way #200
Middleton, WI 53562
P. 608-223-9600

Key Plan

Sheet Issue Date	
BID DOCUMENTS	11/03/17

Revision	Date

IMEG
1800 DEMING WAY, SUITE 200
MIDDLETON, WI 53562
608.223.9600 FAX: 608.836.0415
www.imegcorp.com
PROJECT # 17001140.00

IMEG CORP RESERVES PROPRIETARY RIGHTS, INCLUDING COPYRIGHTS, TO THIS DRAWING AND THE DATA SHOWN THEREON. SAID DRAWING AND/OR DATA ARE THE EXCLUSIVE PROPERTY OF IMEG CORP AND SHALL NOT BE USED OR REPRODUCED FOR ANY OTHER PROJECT WITHOUT THE EXPRESS WRITTEN APPROVAL AND PARTICIPATION OF IMEG CORP. © 2017 IMEG CORP.

REFERENCE SCALE IN INCHES
0 1 2 3

Drawing

FLOOR PLAN LEVEL 1 - PIPING

City of Madison Contract No. **8027**
OPN Project No. **17207000**

M201

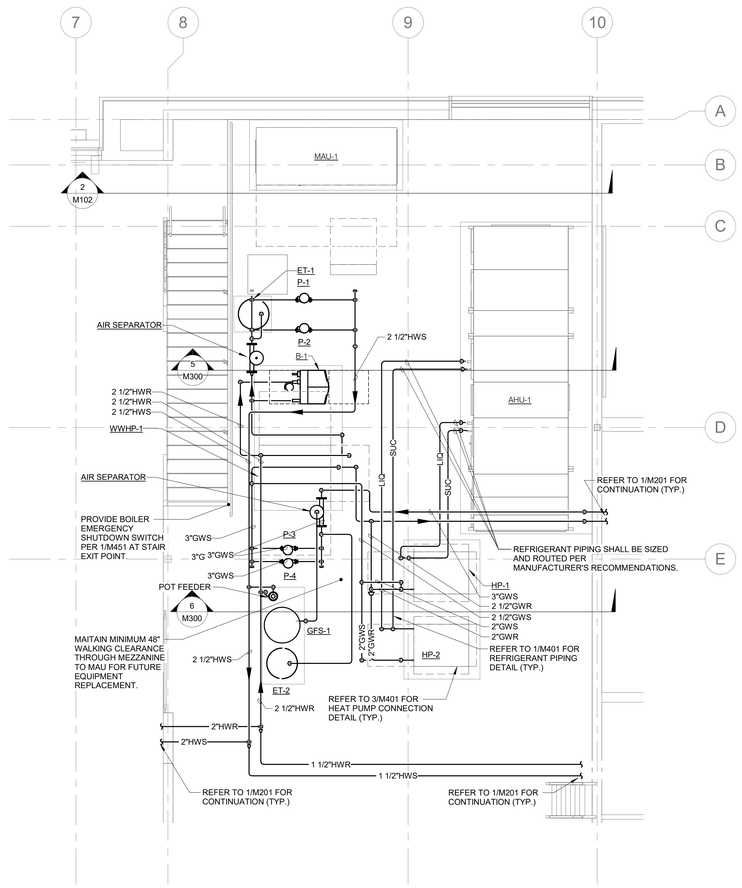

NORTH

1 MEZZANINE PLAN - PIPING

1/4" = 1'-0"

GENERAL NOTES:

1. REFER TO CONTROL DIAGRAM 1/M452 FOR ADDITIONAL CONTROL DEVICES LOCATED WITHIN HEATING WATER AND GEOTHERMAL WATER SYSTEM.

OPN ARCHITECTS

301 N BROOM STREET #100
MADISON, WI 53703
608-819-0260 PHONE
www.opnarchitects.com
opn@opnarchitects.com

All reports, plans, specifications, computer files, field data, notes and other documents and instruments prepared by OPN Architects, Inc. as instruments of service shall remain the property of OPN Architects, Inc. OPN Architects, Inc. shall retain all common law, statutory and other reserved rights, including the copyright thereto.

© 2017 OPN Architects, Inc.

Owner

City of Madison Fire Department
314 W. Dayton St.
Madison, WI 53703

Project

Madison Fire Station 14
3201 Dairy Drive
Madison, WI 53718

Civil Engineer

Snyder & Associates, Inc
5010 Voges Rd
Madison WI, 53718
P. 608-838-0444

Structural Engineer

IMEG
1800 Deming Way #200
Middleton, WI 53562
P. 608-223-9600

Mechanical Engineer

IMEG
1800 Deming Way #200
Middleton, WI 53562
P. 608-223-9600

Electrical Engineer

IMEG
1800 Deming Way #200
Middleton, WI 53562
P. 608-223-9600

Key Plan

Sheet Issue Date

BID DOCUMENTS	11/03/17

Revision	Date

IMEG
1800 DEMING WAY, SUITE 200
MIDDLETON, WI 53562
608.223.9600 FAX: 608.836.0415
www.imegcorp.com
PROJECT # 170011400.00

IMEG CORP RESERVES PROPRIETARY RIGHTS, INCLUDING COPYRIGHTS, TO THIS DRAWING AND THE DATA SHOWN THEREON. SAID DRAWING AND/OR DATA ARE THE EXCLUSIVE PROPERTY OF IMEG CORP AND SHALL NOT BE USED OR REPRODUCED FOR ANY OTHER PROJECT WITHOUT THE EXPRESS WRITTEN APPROVAL AND PARTICIPATION OF IMEG CORP. © 2017 IMEG CORP.

REFERENCE SCALE IN INCHES
0 1 2 3

Drawing

MEZZANINE PLAN - PIPING

City of Madison Contract No. **8027**
OPN Project No. **17207000**

M202

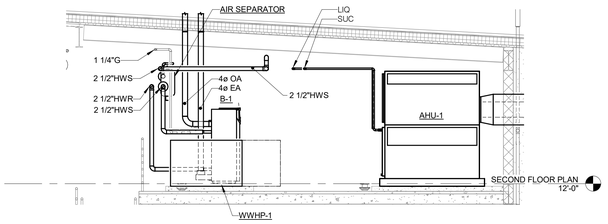

1 SECTION FOR MECHANICAL
1/4" = 1'-0"

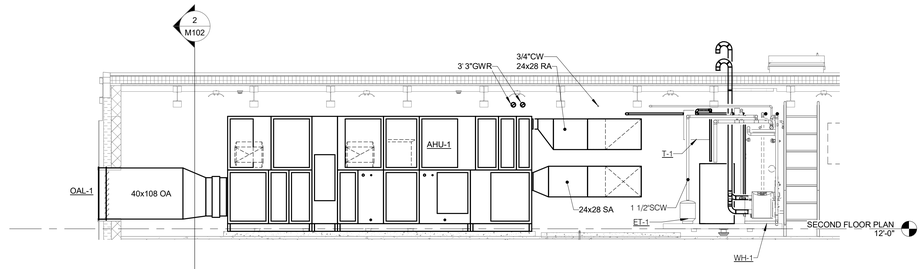

2 SECTION FOR AHU-1 - MECHANICAL
1/4" = 1'-0"

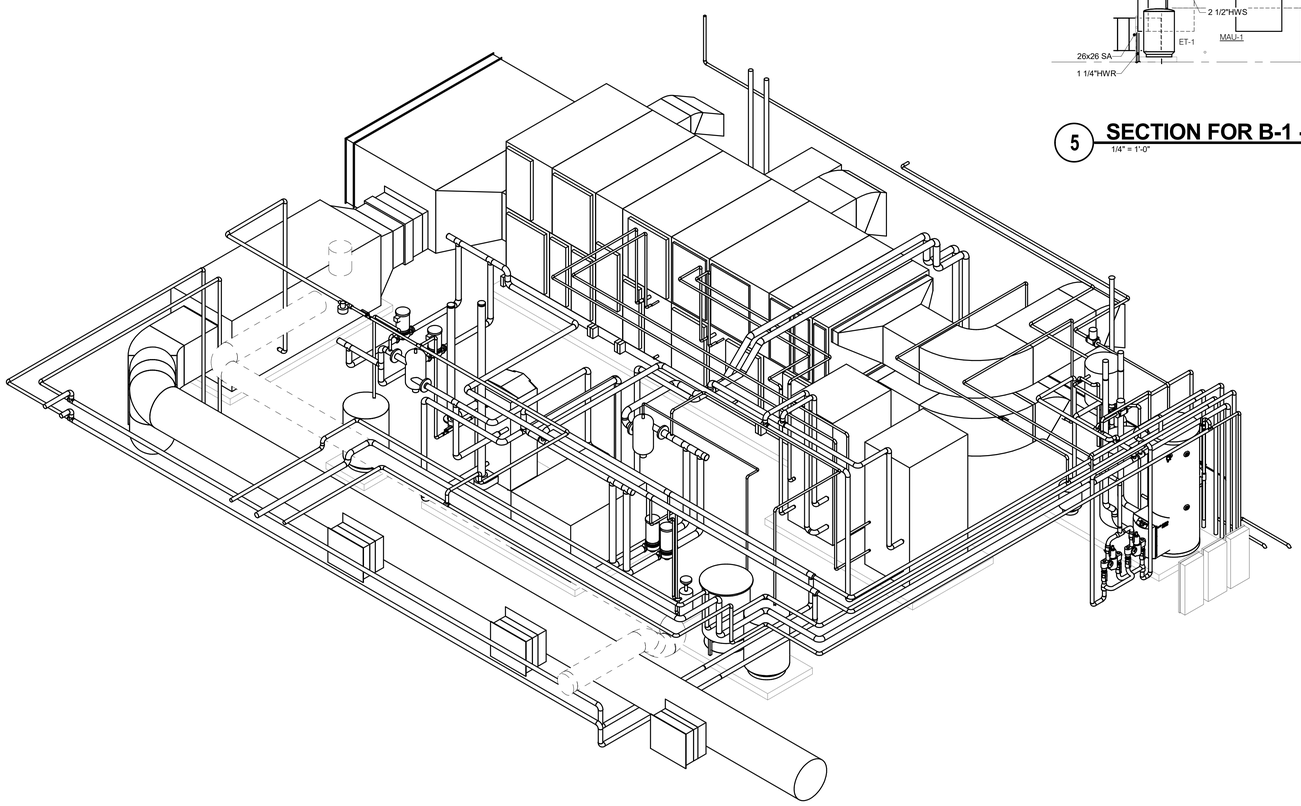

3 MEZZANINE ISOMETRIC PLAN - MECHANICAL

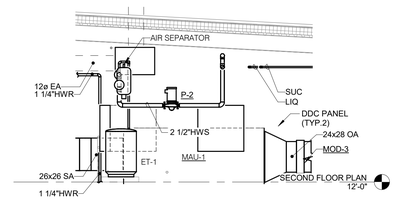

5 SECTION FOR B-1 - MECHANICAL
1/4" = 1'-0"

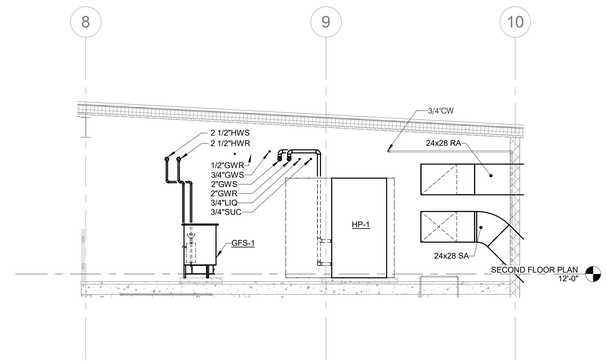

6 SECTION FOR HP-1/GFS-1 - MECHANICAL
1/4" = 1'-0"

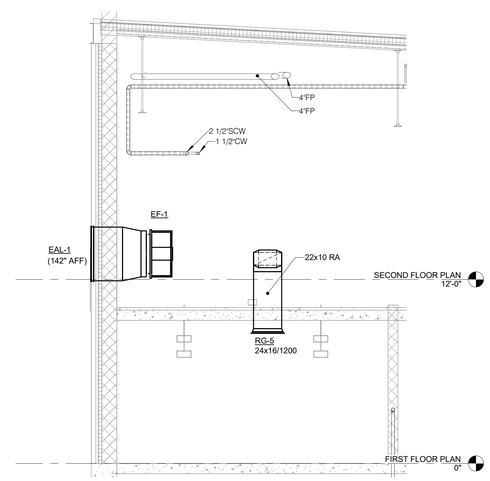

4 SECTION FOR EAL-1 - MECHANICAL
1/4" = 1'-0"

OPN ARCHITECTS
301 N BROOM STREET #100
MADISON, WI 53703
608-819-0260 PHONE
www.opnarchitects.com
opn@opnarchitects.com

All reports, plans, specifications, computer files, field data, notes and other documents and instruments prepared by OPN Architects, Inc. as instruments of service shall remain the property of OPN Architects, Inc. OPN Architects, Inc. shall retain all common law, statutory and other reserved rights, including the copyright thereto.

© 2017 OPN Architects, Inc.

Owner
City of Madison Fire Department
314 W. Dayton St.
Madison, WI 53703

Project
Madison Fire Station 14
3201 Dairy Drive
Madison, WI 53718

Civil Engineer
Snyder & Associates, Inc
5010 Voges Rd
Madison WI, 53718
P. 608-838-0444

Structural Engineer
IMEG
1800 Deming Way #200
Middleton, WI 53562
P. 608-223-9600

Mechanical Engineer
IMEG
1800 Deming Way #200
Middleton, WI 53562
P. 608-223-9600

Electrical Engineer
IMEG
1800 Deming Way #200
Middleton, WI 53562
P. 608-223-9600

Key Plan

Sheet Issue Date
BID DOCUMENTS 11/03/17

Revision Date

IMEG
1800 DEMING WAY, SUITE 200
MIDDLETON, WI 53562
608.223.9600 FAX: 608.836.0415
www.imegcorp.com
PROJECT # 17001140.00

IMEG CORP RESERVES PROPRIETARY RIGHTS, INCLUDING COPYRIGHTS, TO THIS DRAWING AND THE DATA SHOWN THEREON. SAID DRAWING AND/OR DATA ARE THE EXCLUSIVE PROPERTY OF IMEG CORP AND SHALL NOT BE USED OR REPRODUCED FOR ANY OTHER PROJECT WITHOUT THE EXPRESS WRITTEN APPROVAL AND PARTICIPATION OF IMEG CORP. © 2017 IMEG CORP.

REFERENCE SCALE IN INCHES
0 1 2 3

Drawing
ENLARGED PLANS AND SECTIONS - MECHANICAL

City of Madison Contract No. **8027**
OPN Project No. **17207000**

M300

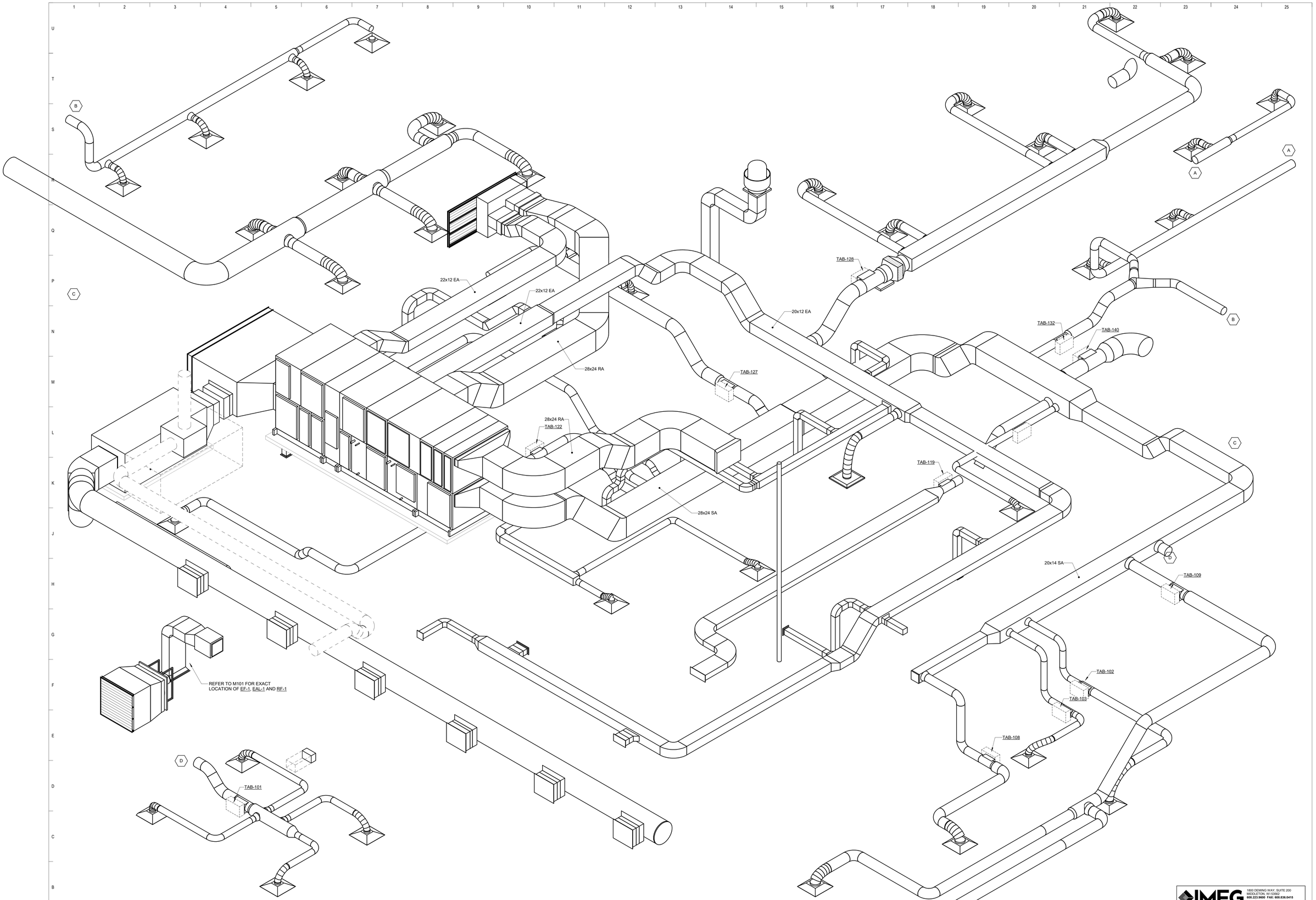

1 OVERALL ISOMETRIC PLAN - VENTILATION

NO SCALE

OPN ARCHITECTS

301 N BROOM STREET #100
MADISON, WI 53703
608-819-0260 PHONE
www.opnarchitects.com
opn@opnarchitects.com

All reports, plans, specifications, computer files, field data, notes and other documents and instruments prepared by OPN Architects, Inc. as instruments of service shall remain the property of OPN Architects, Inc. OPN Architects, Inc. shall retain all common law, statutory and other reserved rights, including the copyright thereto.

© 2017 OPN Architects, Inc.

Owner

City of Madison Fire Department

314 W. Dayton St.
Madison, WI 53703

Project

Madison Fire Station 14

3201 Dairy Drive
Madison, WI 53718

Civil Engineer

Snyder & Associates, Inc

5010 Voges Rd
Madison WI, 53718
P. 608-838-0444

Structural Engineer

IMEG

1800 Deming Way #200
Middleton, WI 53562
P. 608-223-9600

Mechanical Engineer

IMEG

1800 Deming Way #200
Middleton, WI 53562
P. 608-223-9600

Electrical Engineer

IMEG

1800 Deming Way #200
Middleton, WI 53562
P. 608-223-9600

Key Plan

Sheet Issue Date

BID DOCUMENTS 11/03/17

Revision Date

IMEG

1800 DEMING WAY, SUITE 200
MIDDLETON, WI 53562
608.223.9600 FAX: 608.836.0415
www.imegcorp.com
PROJECT # 17001140.00

IMEG CORP RESERVES PROPRIETARY RIGHTS, INCLUDING COPYRIGHTS, TO THIS DRAWING AND THE DATA SHOWN THEREON. SAID DRAWING AND/OR DATA ARE THE EXCLUSIVE PROPERTY OF IMEG CORP AND SHALL NOT BE USED OR REPRODUCED FOR ANY OTHER PROJECT WITHOUT THE EXPRESS WRITTEN APPROVAL AND PARTICIPATION OF IMEG CORP. © 2017 IMEG CORP.

REFERENCE SCALE IN INCHES

0 1 2 3

Drawing

ISOMETRIC VIEW - MECHANICAL

City of Madison Contract No. **8027**
OPN Project No. **17207000**

M301

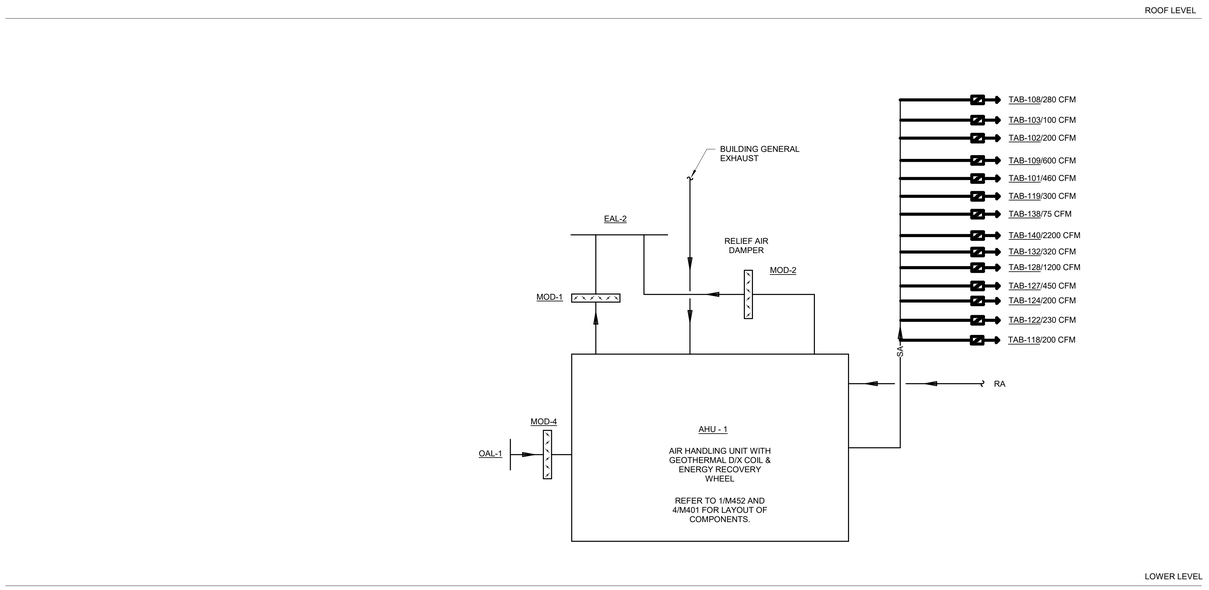

1 **AIRFLOW DIAGRAM LIVING SPACE**
NO SCALE

OPN ARCHITECTS
301 N BROOM STREET #100
MADISON, WI 53703
608-819-0260 PHONE
www.opnarchitects.com
opn@opnarchitects.com

All reports, plans, specifications, computer files, field data, notes and other documents and instruments prepared by OPN Architects, Inc. as instruments of service shall remain the property of OPN Architects, Inc. OPN Architects, Inc. shall retain all common law, statutory and other reserved rights, including the copyright thereto.

© 2017 OPN Architects, Inc.

Owner
City of Madison Fire Department
314 W. Dayton St.
Madison, WI 53703

Project
Madison Fire Station 14
3201 Dairy Drive
Madison, WI 53718

Civil Engineer
Snyder & Associates, Inc
5010 Voges Rd
Madison WI, 53718
P. 608-838-0444

Structural Engineer
IMEG
1800 Deming Way #200
Middleton, WI 53562
P. 608-223-9600

Mechanical Engineer
IMEG
1800 Deming Way #200
Middleton, WI 53562
P. 608-223-9600

Electrical Engineer
IMEG
1800 Deming Way #200
Middleton, WI 53562
P. 608-223-9600

Key Plan

Sheet Issue Date
BID DOCUMENTS 11/03/17

Revision Date

Drawing
FLOW DIAGRAM - MECHANICAL

City of Madison Contract No. **8027**
OPN Project No. **17207000**

M350

IMEG
1800 DEMING WAY, SUITE 200
MIDDLETON, WI 53562
608.223.9600 FAX: 608.836.0415
www.imegcorp.com
PROJECT # 17001140.00

IMEG CORP RESERVES PROPRIETARY RIGHTS, INCLUDING COPYRIGHTS, TO THIS DRAWING AND THE DATA SHOWN THEREON. SAID DRAWING AND/OR DATA ARE THE EXCLUSIVE PROPERTY OF IMEG CORP AND SHALL NOT BE USED OR REPRODUCED FOR ANY OTHER PROJECT WITHOUT THE EXPRESS WRITTEN APPROVAL AND PARTICIPATION OF IMEG CORP. © 2017 IMEG CORP.

REFERENCE SCALE IN INCHES
0 1 2 3

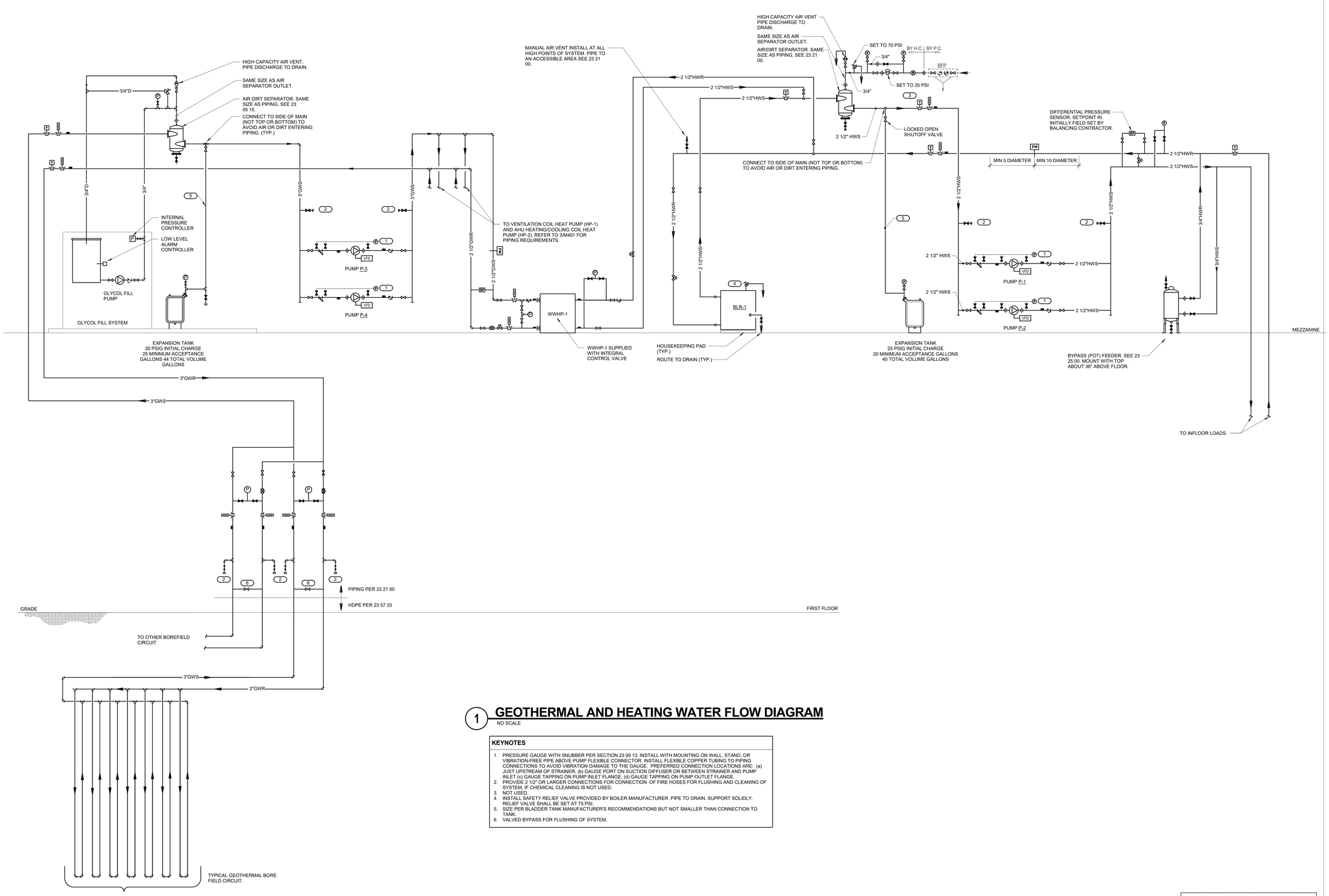

1 GEOTHERMAL AND HEATING WATER FLOW DIAGRAM

NO SCALE

KEYNOTES

1. PRESSURE GAUGE WITH SNUBBER PER SECTION 23 09 13. INSTALL WITH MOUNTING ON WALL, STAND, OR VIBRATION-FREE PIPE ABOVE PUMP FLEXIBLE CONNECTOR. INSTALL FLEXIBLE COPPER TUBING TO PIPING CONNECTIONS TO AVOID VIBRATION DAMAGE TO THE GAUGE. PREFERRED CONNECTION LOCATIONS ARE: (a) JUST UPSTREAM OF STRAINER, (b) GAUGE PORT ON SUCTION DIFFUSER OR BETWEEN STRAINER AND PUMP INLET (c) GAUGE TAPPING ON PUMP INLET FLANGE. (d) GAUGE TAPPING ON PUMP OUTLET FLANGE.
2. PROVIDE 2 1/2" OR LARGER CONNECTIONS FOR CONNECTION OF FIRE HOSES FOR FLUSHING AND CLEANING OF SYSTEM, IF CHEMICAL CLEANING IS NOT USED.
3. NOT USED.
4. INSTALL SAFETY RELIEF VALVE PROVIDED BY BOILER MANUFACTURER. PIPE TO DRAIN. SUPPORT SOLIDLY. RELIEF VALVE SHALL BE SET AT 75 PSI.
5. SIZE PER BLADDER TANK MANUFACTURER'S RECOMMENDATIONS BUT NOT SMALLER THAN CONNECTION TO TANK.
6. VALVED BYPASS FOR FLUSHING OF SYSTEM.

OPN ARCHITECTS
301 N BROOM STREET #100
MADISON, WI 53703
608-819-0260 PHONE
www.opnarchitects.com
opn@opnarchitects.com

All reports, plans, specifications, computer files, field data, notes and other documents and instruments prepared by OPN Architects, Inc. as instruments of service shall remain the property of OPN Architects, Inc. OPN Architects, Inc. shall retain all common law, statutory and other reserved rights, including the copyright thereto.

© 2017 OPN Architects, Inc.

Owner
City of Madison Fire Department
314 W. Dayton St.
Madison, WI 53703

Project
Madison Fire Station 14
3201 Dairy Drive
Madison, WI 53718

Civil Engineer
Snyder & Associates, Inc
5010 Voges Rd
Madison WI, 53718
P. 608-838-0444

Structural Engineer
IMEG
1800 Deming Way #200
Middleton, WI 53562
P. 608-223-9600

Mechanical Engineer
IMEG
1800 Deming Way #200
Middleton, WI 53562
P. 608-223-9600

Electrical Engineer
IMEG
1800 Deming Way #200
Middleton, WI 53562
P. 608-223-9600

Key Plan

Sheet Issue Date
BID DOCUMENTS 11/03/17

Revision Date

Drawing
FLOW DIAGRAM - MECHANICAL

City of Madison Contract No. **8027**
OPN Project No. **17207000**

M351

IMEG
1800 DEMING WAY, SUITE 200
MIDDLETON, WI 53562
608.223.9600 FAX: 608.836.0415
www.imegcorp.com
PROJECT # 17001140.00

IMEG CORP RESERVES PROPRIETARY RIGHTS, INCLUDING COPYRIGHTS, TO THIS DRAWING AND THE DATA SHOWN THEREON. SAID DRAWING AND/OR DATA ARE THE EXCLUSIVE PROPERTY OF IMEG CORP AND SHALL NOT BE USED OR REPRODUCED FOR ANY OTHER PROJECT WITHOUT THE EXPRESS WRITTEN APPROVAL AND PARTICIPATION OF IMEG CORP. © 2017 IMEG CORP.

REFERENCE SCALE IN INCHES
0 1 2 3

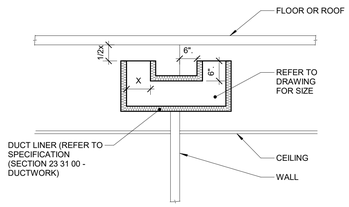

1 TRANSFER DUCT DETAIL (ENDS UP)

NO SCALE

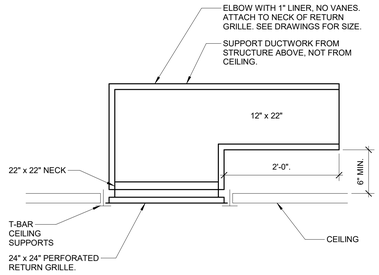

2 CEILING RETURN GRILLE

NO SCALE

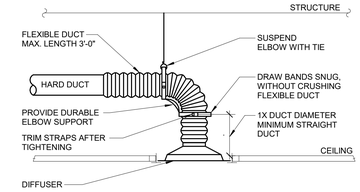

3 DIFFUSER CONNECTION DETAIL (W/ RADIUS FORMING ELBOW)

NO SCALE

NOTES:

1. TO ATTACH FLEX DUCT TO THE HARD DUCT, TAPE THE INNER LINER TO THE HARD DUCT THEN ATTACH WITH TWO NYLON TIE WRAPS; ONE FOR THE INNER LINER AND ONE FOR THE OUTER SHELL. FOLD THE OUTER SHELL INSIDE ITSELF SO IT HAS NEAT EDGES PRIOR TO TIE WRAPPING.
2. "SMARTFLOW" ELBOW THERMAFLEX "FLEXFLOW" AND "FLEXRIGHT" ARE ACCEPTABLE PRODUCTS FOR DURABLE ELBOW SUPPORT.

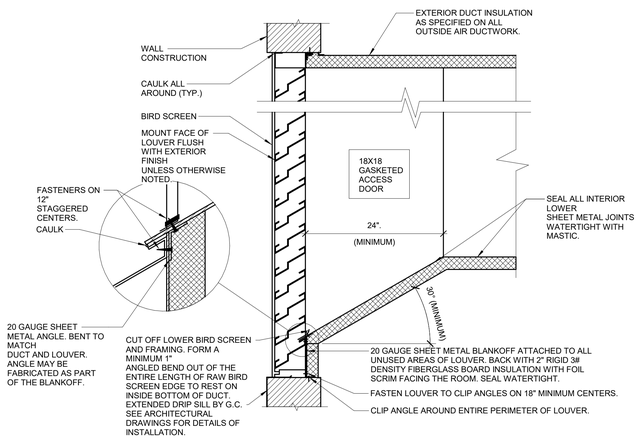

4 LOUVER INSTALLATION DETAIL

NO SCALE

NOTES:

1. SEAL ALL JOINTS ON BOTTOM INTERIOR SURFACE OF DUCT WITHIN 6'-0" OF THE LOUVER WATER TIGHT.
2. MOUNT BOTTOM OF INTAKE LOUVERS AT LEAST 40" ABOVE GRADE OR ROOF ELEVATION TO MINIMIZE CHANCES OF SNOW DRIFTING INTO THE LOUVER.
3. CAULK SHEETMETAL SCREWS WHERE THEY PENETRATE METAL.

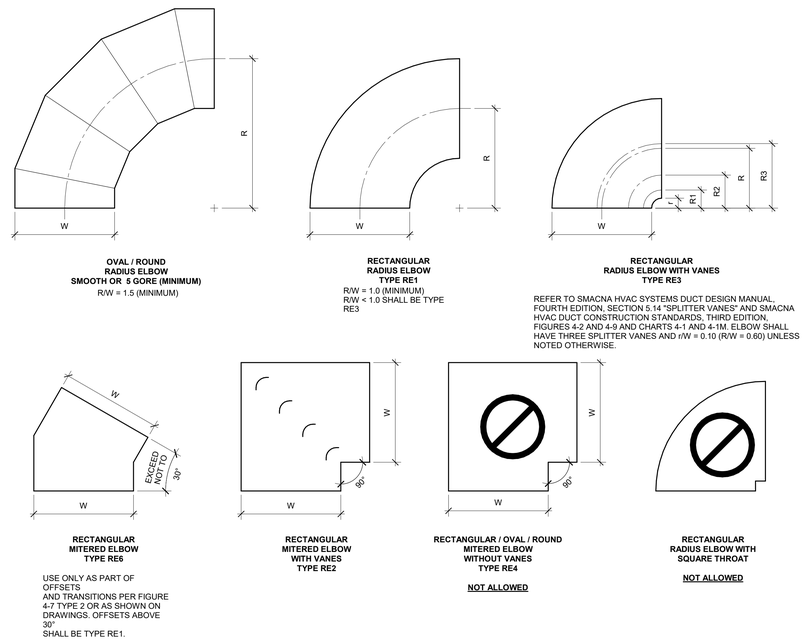

5 ELBOW CONSTRUCTION

NO SCALE

NOTES:

1. BEAD, CROSSBREAK, AND REINFORCE FLAT SURFACES AS IN STRAIGHT DUCT.
2. REFER TO SPECIFICATIONS FOR ADDITIONAL INFORMATION.
3. DEFAULT ELBOW SHALL BE TYPE "RE1".
4. ELBOW TYPES SHALL BE INSTALLED AS SHOWN AND NOT BE SUBSTITUTED WITHOUT PERMISSION. EXCEPTION: RE1 OR RE3 MAY BE SUBSTITUTED FOR RE2.

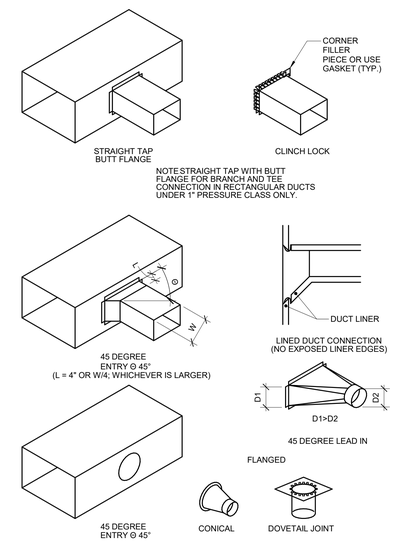

6 BRANCH CONNECTIONS

NO SCALE

NOTES:

1. DO NOT USE CONNECTIONS WITH SCOOPS.
2. FIT ALL CONNECTIONS TO AVOID VISIBLE OPENINGS AND SECURE THEM SUITABLY FOR THE PRESSURE CLASS.
3. ADDITIONAL MECHANICAL FASTENERS ARE REQUIRED FOR 4"W G. AND OVER.
4. SEE SPECIFICATIONS FOR ADDITIONAL INFORMATION.

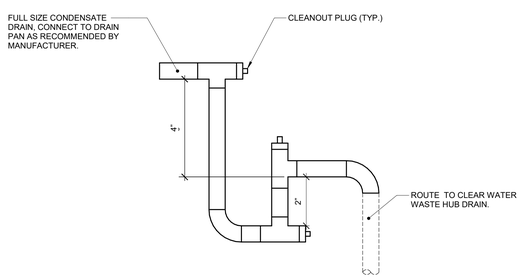

7 CONDENSATE TRAP DETAIL (DRAW-THROUGH)

NO SCALE

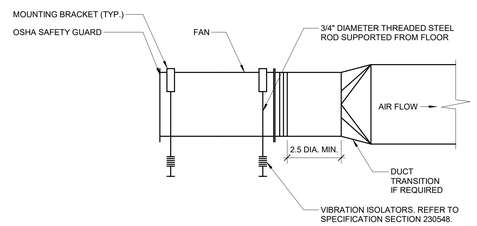

8 IN-LINE EXHAUST FAN

NO SCALE

OPN ARCHITECTS
301 N BROOM STREET #100
MADISON, WI 53703
608-819-0260 PHONE
www.opnarchitects.com
opn@opnarchitects.com

All reports, plans, specifications, computer files, field data, notes and other documents and instruments prepared by OPN Architects, Inc. as instruments of service shall remain the property of OPN Architects, Inc. OPN Architects, Inc. shall retain all common law, statutory and other reserved rights, including the copyright thereto.

© 2017 OPN Architects, Inc.

Owner
City of Madison Fire Department
314 W. Dayton St.
Madison, WI 53703

Project
Madison Fire Station 14
3201 Dairy Drive
Madison, WI 53718

Civil Engineer
Snyder & Associates, Inc
5010 Voges Rd
Madison WI, 53718
P. 608-838-0444

Structural Engineer
IMEG
1800 Deming Way #200
Middleton, WI 53562
P. 608-223-9600

Mechanical Engineer
IMEG
1800 Deming Way #200
Middleton, WI 53562
P. 608-223-9600

Electrical Engineer
IMEG
1800 Deming Way #200
Middleton, WI 53562
P. 608-223-9600

Key Plan

Sheet Issue Date
BID DOCUMENTS 11/03/17

Revision Date

IMEG
1800 DEMING WAY, SUITE 200
MIDDLETON, WI 53562
608.223.9600 FAX: 608.836.0415
www.imegcorp.com
PROJECT # 17001140.00

IMEG CORP RESERVES PROPRIETARY RIGHTS, INCLUDING COPYRIGHTS, TO THIS DRAWING AND THE DATA SHOWN THEREON. SAID DRAWING AND/OR DATA ARE THE EXCLUSIVE PROPERTY OF IMEG CORP AND SHALL NOT BE USED OR REPRODUCED FOR ANY OTHER PROJECT WITHOUT THE EXPRESS WRITTEN APPROVAL AND PARTICIPATION OF IMEG CORP. © 2017 IMEG CORP.

REFERENCE SCALE IN INCHES
0 1 2 3

Drawing
DETAILS - MECHANICAL

City of Madison Contract No. **8027**
OPN Project No. **17207000**

M400

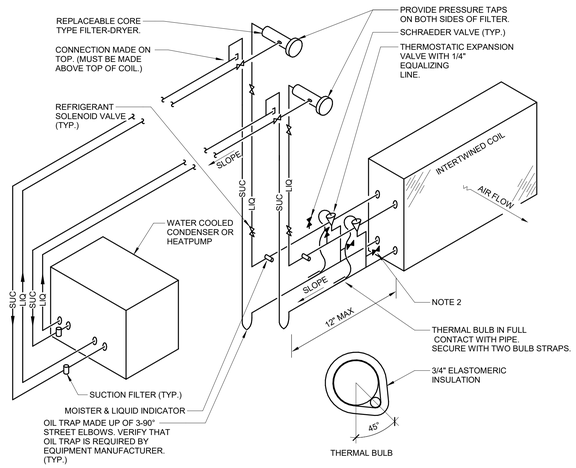

1 REFRIGERANT PIPING DETAIL (VERT. INTERTWINED)

NO SCALE

NOTES:

1. THIS DIAGRAM IS SCHEMATIC IN NATURE. UNIT MANUFACTURER SHALL SUBMIT DETAILED PIPING DIAGRAM SHOWING RECOMMENDED PIPING ARRANGEMENT IF DIFFERENT FROM ABOVE.
2. INSTALL 1/4" SCHRAEDER VALVES TO MEASURE REFRIGERANT PRESSURE WITH REFRIGERANT GAUGES.
3. PIPE SIZES, IF SHOWN ON DRAWINGS, ARE ONLY FOR THE CONVENIENCE OF THE BIDDERS. ACTUAL NUMBERS AND SIZES OF PIPES AND ANY ACCESSORIES SUCH AS ACCUMULATORS, RECEIVERS, SEPARATORS AND HEAT TRACING SHALL BE DETERMINED BY THE COIL SUPPLIER AND SUBMITTED AS SHOP DRAWINGS. NO COMPENSATION WILL BE MADE IF ACTUAL NUMBER OR SIZES OF PIPES EXCEED WHAT IS SHOWN.
4. QUANTITY OF COILS VARY PER UNIT, PROVIDE INTERTWINED COIL CONNECTIONS FOR STACKED COILS SO BOTH COILS HAVE EQUAL COOLING AT PART LOAD CONDITIONS.
5. PIPING DETAIL SHOWN IS FOR COOLING ONLY DX COIL. HEAT PUMP STYLE UNITS MAY REQUIRE ADDITIONAL ACCESSORIES FOR COMPLETE SYSTEM PER MANUFACTURER RECOMMENDATIONS.

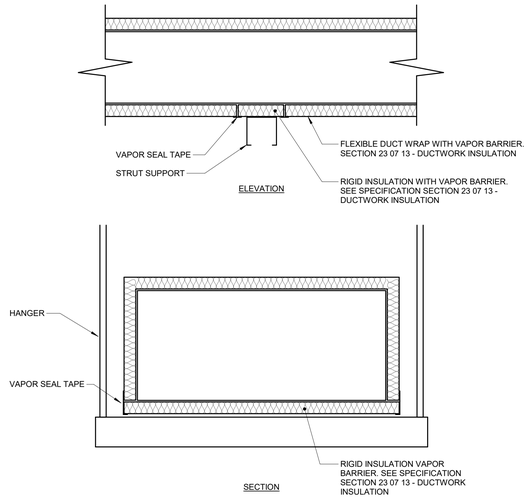

2 TRAPEZE HANGER DUCT WRAP VAPOR SEAL

NO SCALE

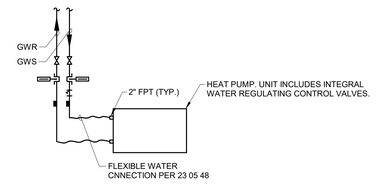

3 HEAT PUMP CONNECTION DETAIL

NO SCALE

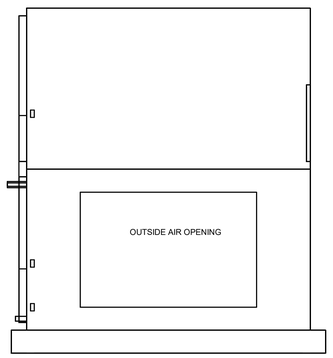

L.H. VIEW

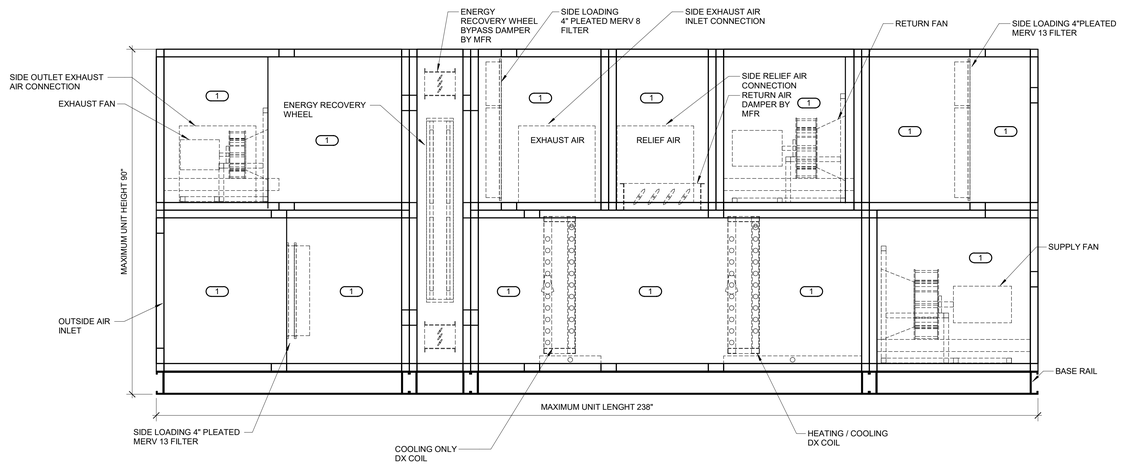

ELEVATION

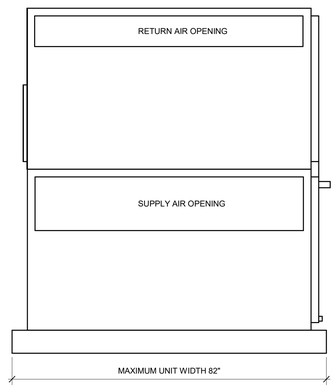

R.H. VIEW

4 AHU DETAILS

NO SCALE

KEYNOTES:

1. ACCESS SECTION WITH FULL HEIGHT ACCESS DOOR

OPN ARCHITECTS
301 N BROOM STREET #100
MADISON, WI 53703
608-819-0260 PHONE
www.opnarchitects.com
opn@opnarchitects.com

All reports, plans, specifications, computer files, field data, notes and other documents and instruments prepared by OPN Architects, Inc. as instruments of service shall remain the property of OPN Architects, Inc. OPN Architects, Inc. shall retain all common law, statutory and other reserved rights, including the copyright thereto.

© 2017 OPN Architects, Inc.

Owner

City of Madison Fire Department
314 W. Dayton St.
Madison, WI 53703

Project

Madison Fire Station 14
3201 Dairy Drive
Madison, WI 53718

Civil Engineer

Snyder & Associates, Inc
5010 Voges Rd
Madison WI, 53718
P. 608-838-0444

Structural Engineer

IMEG
1800 Deming Way #200
Middleton, WI 53562
P. 608-223-9600

Mechanical Engineer

IMEG
1800 Deming Way #200
Middleton, WI 53562
P. 608-223-9600

Electrical Engineer

IMEG
1800 Deming Way #200
Middleton, WI 53562
P. 608-223-9600

Key Plan

Sheet Issue Date	
BID DOCUMENTS	11/03/17

Revision	Date

IMEG
1800 DEMING WAY, SUITE 200
MIDDLETON, WI 53562
608.223.9600 FAX: 608.836.0415
www.imegcorp.com
PROJECT # 17001140.00

IMEG CORP RESERVES PROPRIETARY RIGHTS, INCLUDING COPYRIGHTS, TO THIS DRAWING AND THE DATA SHOWN THEREON. SAID DRAWING AND/OR DATA ARE THE EXCLUSIVE PROPERTY OF IMEG CORP AND SHALL NOT BE USED OR REPRODUCED FOR ANY OTHER PROJECT WITHOUT THE EXPRESS WRITTEN APPROVAL AND PARTICIPATION OF IMEG CORP. © 2017 IMEG CORP.

REFERENCE SCALE IN INCHES
0 1 2 3

Drawing

DETAILS - MECHANICAL

City of Madison Contract No. **8027**
OPN Project No. **17207000**

M401

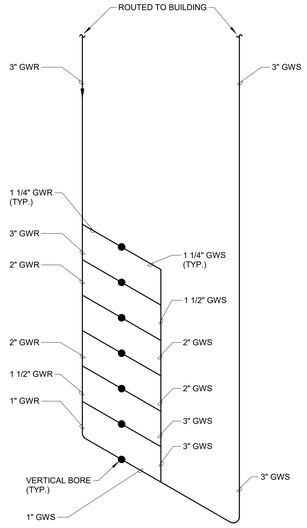

1 TYPICAL BOREFIELD CIRCUIT SIZING

NO SCALE

NOTES:

1. ALL GWR/GWS PIPING FOR BOREFIELD CIRCUITS SHALL BE AT LEAST 6'-0" BELOW FINISHED GRADE.

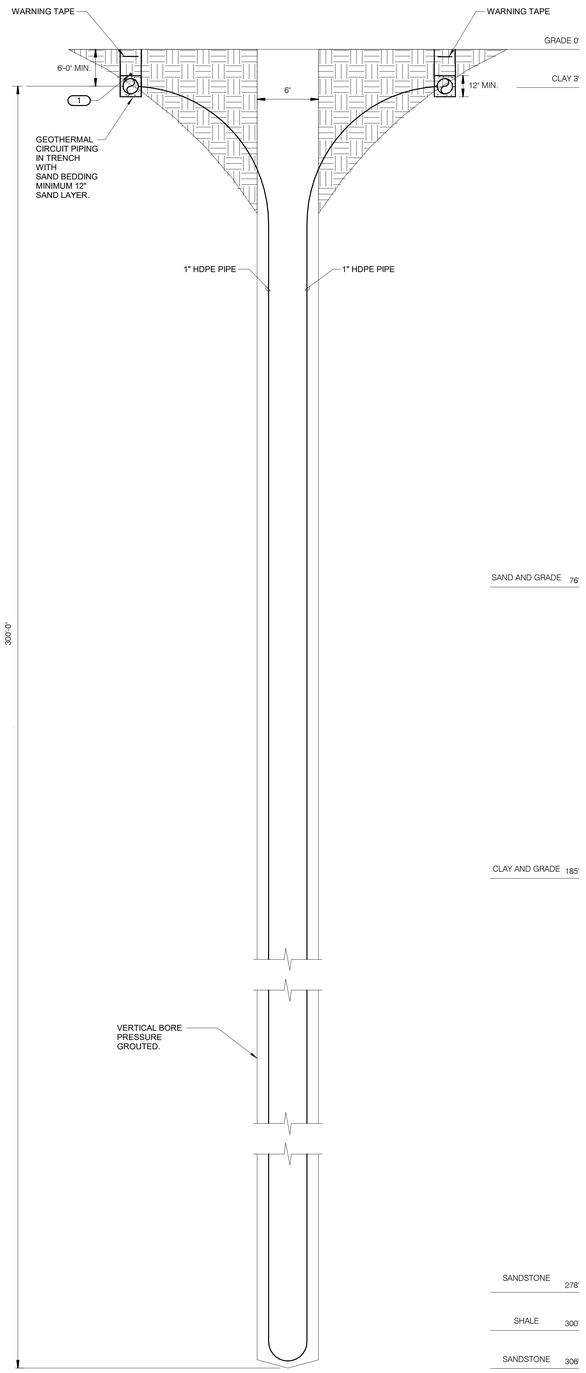

2 GEOTHERMAL EXCHANGER DETAIL

NO SCALE

KEYNOTES:

1 LOCATING WIRE INSTALLED PER MANUFACTURER'S RECOMMENDATIONS ON THE ENTIRE PERIMETER OF CIRCUIT PIPING AT EDGES OF WELL FIELD, ON CIRCUIT PIPING BETWEEN WELL FIELD AND BUILDING.

3 GEOTHERMAL FIELD INFORMATION

NO SCALE

KEYNOTES:

1. REFER TO 23 57 33 FOR ADDITIONAL REQUIREMENTS.
2. PEAK BLOCK HEATING LOAD IS REDUCED COMPARED TO ASSUMED BUILDING PEAK LOAD DUE TO BOILER IN THE HEATING WATER SYSTEM.

GEOTHERMAL FIELD INFORMATION

TOTAL NUMBER OF GEOTHERMAL BORES INCLUDING EXISTING TEST BORE	14
TOTAL NUMBER OF NEW GEOTHERMAL BORES	13
NUMBER OF BORES PER CURCUIT	7
BORE DEPTH	SEE 2/M402
TYPICAL BORE SPACING	20'x20'
BOREFEILD FLUID TEMPERATURE ENTERING BUILDING WINTER	38°F MIN
BOREFEILD FLUID TEMPERATURE ENTERING BUILDING SUMMER	90°F MAX
GEOTHERMAL FLUID	25% FOOD GRADE PROPYLENE GLYCOL
GROUT THERMAL CONDUCTIVITY	1.0BTU/H-FT-°F
FORMATION THERMAL CONDUCTIVITY	1.92 BTU/HR-FT-°F
FORMATION THERMAL DIFFUSIUITY	1.32 FT2/ DAY
FORMATION THERMAL TEMPERATURE	49.4 °F
PEAK BLOCK COOLING LOAD	261 MBH
PEAK BLOCK HEATING LOAD	265 MBH
ASSUMED ANNUAL EFL COOLING HOURS	900
ASSUMED ANNUAL EFL HEATING HOURS	800

OPN ARCHITECTS
301 N BROOM STREET #100
MADISON, WI 53703
608-819-0260 PHONE
www.opnarchitects.com
opn@opnarchitects.com

All reports, plans, specifications, computer files, field data, notes and other documents and instruments prepared by OPN Architects, Inc. as instruments of service shall remain the property of OPN Architects, Inc. OPN Architects, Inc. shall retain all common law, statutory and other reserved rights, including the copyright thereto.

© 2017 OPN Architects, Inc.

Owner

City of Madison Fire Department
314 W. Dayton St.
Madison, WI 53703

Project

Madison Fire Station 14
3201 Dairy Drive
Madison, WI 53718

Civil Engineer

Snyder & Associates, Inc
5010 Voges Rd
Madison WI, 53718
P. 608-838-0444

Structural Engineer

IMEG
1800 Deming Way #200
Middleton, WI 53562
P. 608-223-9600

Mechanical Engineer

IMEG
1800 Deming Way #200
Middleton, WI 53562
P. 608-223-9600

Electrical Engineer

IMEG
1800 Deming Way #200
Middleton, WI 53562
P. 608-223-9600

Key Plan

Sheet Issue Date
BID DOCUMENTS 11/03/17

Revision Date

IMEG
1800 DEMING WAY, SUITE 200
MIDDLETON, WI 53562
608.223.9600 FAX: 608.836.0415
www.imegcorp.com
PROJECT # 17001140.00

IMEG CORP RESERVES PROPRETARY RIGHTS, INCLUDING COPYRIGHTS, TO THIS DRAWING AND THE DATA SHOWN THEREON. SAID DRAWING AND/OR DATA ARE THE EXCLUSIVE PROPERTY OF IMEG CORP AND SHALL NOT BE USED OR REPRODUCED FOR ANY OTHER PROJECT WITHOUT THE EXPRESS WRITTEN APPROVAL AND PARTICIPATION OF IMEG CORP. © 2017 IMEG CORP.

REFERENCE SCALE IN INCHES
0 1 2 3

Drawing

DETAILS - MECHANICAL

City of Madison Contract No. **8027**
OPN Project No. **17207000**

M402

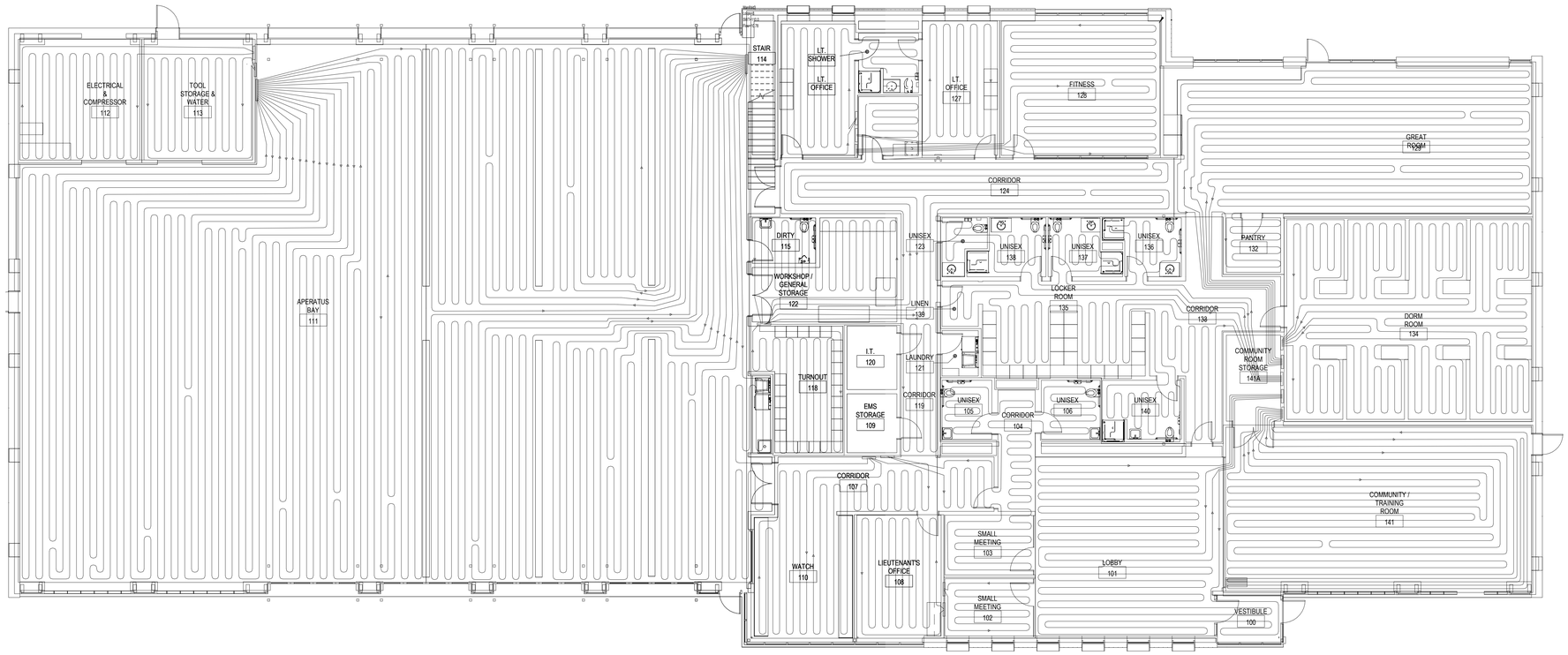

1 RADIANT FLOOR PIPING DETAIL

NO SCALE

NOTES:

1. SAMPLE INFLOOR RADIANT TUBING LAYOUT. MANUFACTURER RESPONSIBLE FOR FINAL LAYOUT OF SYSTEM. REFER TO SPECIFICATION SECTION 23 83 00 FOR REQUIREMENTS.
2. REFER TO DETAIL 2/M403 FOR INFLOOR HEATING SYSTEM LAYOUT.
3. REFER TO 3/M403 FOR RADIANT SLAB SENSOR DETAIL.
4. TUBING AT EXTERIOR 4' ON PERIMETER OF BUILDING SHALL BE HAVE CLOSER SPACING THAN OTHER PORTIONS OF SAME ZONE.

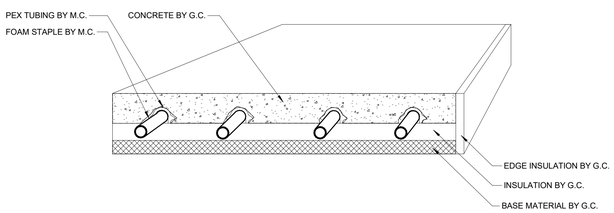

2 INFLOOR HEATING INSTALLATION DETAIL

NO SCALE

NOTES:

1. INSTALL PER MANUFACTURER REQUIREMENTS. COORDINATE WITH G.C. ON BASE MATERIAL, CONCRETE, AND INSULATION FOR INSTALLATION REQUIREMENTS.

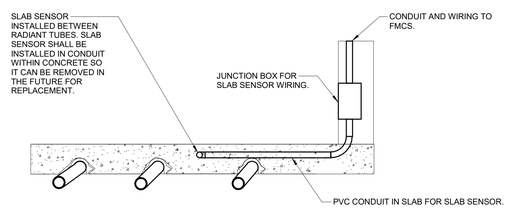

3 RADIANT SLAB SENSOR DETAIL

NO SCALE

NOTES:

1. INSTALLATION SHALL COMPLY WITH RADIANT MANUFACTURER'S INSTALLATION REQUIREMENTS.
2. REFER TO 23 09 00 SPECIFICATIONS FOR CONDUIT TYPE ABOVE SLAB.
3. ONE TEMPERATURE SENSOR REQUIRED PER MANIFOLD/ZONE TO CONTROL TEMPERATURE LIMITS OF CONCRETE. REFER TO CONTROL DIAGRAMS FOR ADDITIONAL INFORMATION.

IMEG
1800 DEMING WAY, SUITE 200
MIDDLETON, WI 53562
608.223.9600 FAX: 608.836.0415
www.imegcorp.com
PROJECT # 17001140.00

IMEG CORP RESERVES PROPRIETARY RIGHTS, INCLUDING COPYRIGHTS, TO THIS DRAWING AND THE DATA SHOWN THEREON. SAID DRAWING AND/OR DATA ARE THE EXCLUSIVE PROPERTY OF IMEG CORP AND SHALL NOT BE USED OR REPRODUCED FOR ANY OTHER PROJECT WITHOUT THE EXPRESS WRITTEN APPROVAL AND PARTICIPATION OF IMEG CORP. © 2017 IMEG CORP.

REFERENCE SCALE IN INCHES

0 1 2 3

OPN ARCHITECTS
301 N BROOM STREET #100
MADISON, WI 53703
608-819-0260 PHONE
www.opnarchitects.com
opn@opnarchitects.com

All reports, plans, specifications, computer files, field data, notes and other documents and instruments prepared by OPN Architects, Inc. as instruments of service shall remain the property of OPN Architects, Inc. OPN Architects, Inc. shall retain all common law, statutory and other reserved rights, including the copyright thereto.

© 2017 OPN Architects, Inc.

Owner

City of Madison Fire Department
314 W. Dayton St.
Madison, WI 53703

Project

Madison Fire Station 14
3201 Dairy Drive
Madison, WI 53718

Civil Engineer

Snyder & Associates, Inc
5010 Voges Rd
Madison WI, 53718
P. 608-838-0444

Structural Engineer

IMEG
1800 Deming Way #200
Middleton, WI 53562
P. 608-223-9600

Mechanical Engineer

IMEG
1800 Deming Way #200
Middleton, WI 53562
P. 608-223-9600

Electrical Engineer

IMEG
1800 Deming Way #200
Middleton, WI 53562
P. 608-223-9600

Key Plan

Sheet Issue Date

BID DOCUMENTS 11/03/17

Revision Date

Drawing

DETAILS - MECHANICAL

City of Madison Contract No. **8027**
OPN Project No. **17207000**

M403

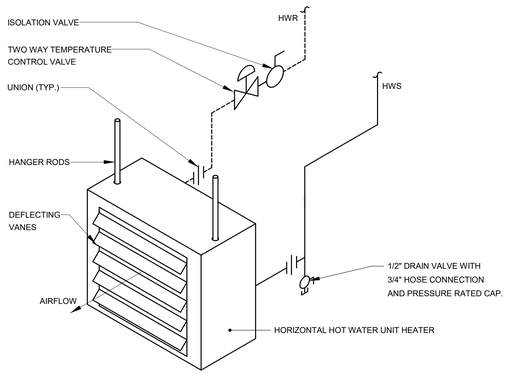

1 HORIZONTAL HOT WATER UNIT HEATER DETAIL

NO SCALE

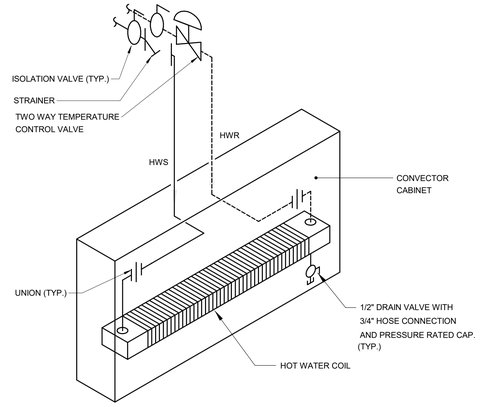

2 DOWNFEED HOT WATER CABINET DETAIL

NO SCALE

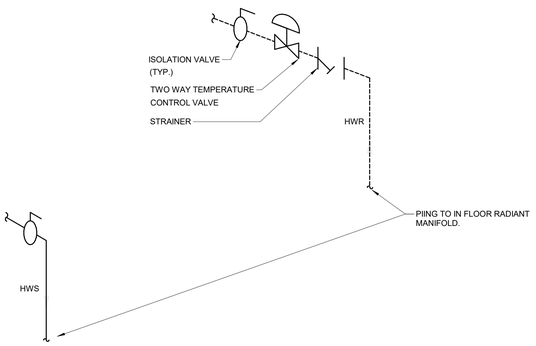

3 IN FLOOR HEAT MANIFOLD PIPING DETAIL

NO SCALE

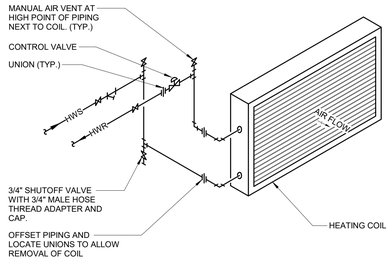

4 HOT WATER COIL PIPING

NO SCALE

OPN ARCHITECTS
301 N BROOM STREET #100
MADISON, WI 53703
608-819-0260 PHONE
www.opnarchitects.com
opn@opnarchitects.com

All reports, plans, specifications, computer files, field data, notes and other documents and instruments prepared by OPN Architects, Inc. as instruments of service shall remain the property of OPN Architects, Inc. OPN Architects, Inc. shall retain all common law, statutory and other reserved rights, including the copyright thereto.

© 2017 OPN Architects, Inc.

Owner

City of Madison Fire Department
314 W. Dayton St.
Madison, WI 53703

Project

Madison Fire Station 14
3201 Dairy Drive
Madison, WI 53718

Civil Engineer

Snyder & Associates, Inc
5010 Voges Rd
Madison WI, 53718
P. 608-838-0444

Structural Engineer

IMEG
1800 Deming Way #200
Middleton, WI 53562
P. 608-223-9600

Mechanical Engineer

IMEG
1800 Deming Way #200
Middleton, WI 53562
P. 608-223-9600

Electrical Engineer

IMEG
1800 Deming Way #200
Middleton, WI 53562
P. 608-223-9600

IMEG
1800 DEMING WAY, SUITE 200
MIDDLETON, WI 53562
608.223.9600 FAX: 608.836.0415
www.imegcorp.com
PROJECT # 17001140.00

IMEG CORP RESERVES PROPRIETARY RIGHTS, INCLUDING COPYRIGHTS, TO THIS DRAWING AND THE DATA SHOWN THEREON. SAID DRAWING AND/OR DATA ARE THE EXCLUSIVE PROPERTY OF IMEG CORP AND SHALL NOT BE USED OR REPRODUCED FOR ANY OTHER PROJECT WITHOUT THE EXPRESS WRITTEN APPROVAL AND PARTICIPATION OF IMEG CORP. © 2017 IMEG CORP.

REFERENCE SCALE IN INCHES
0 1 2 3

Key Plan

Sheet Issue Date

BID DOCUMENTS	11/03/17

Revision	Date

Drawing

DETAILS - MECHANICAL

City of Madison Contract No. **8027**
OPN Project No. **17207000**

M404

CONTROL SYMBOL LIST

NOT ALL SYMBOLS MAY APPLY.

SYMBOL:	DESCRIPTION:
GWR	GEOTHERMAL WATER RETURN
GWS	GEOTHERMAL WATER SUPPLY
HWR	HEATING WATER RETURN
HWS	HEATING WATER SUPPLY
	CONTROL VALVE (THREE-WAY)
	CONTROL VALVE (TWO-WAY)
S	SOLENOID VALVE
	CHECK VALVE
T	THERMOSTAT
T	THERMOSTAT/SENSOR WITH HEAVY DUTY ENCLOSURE
T	TEMPERATURE SENSOR (DUCT MOUNTED)
T	TEMPERATURE SENSOR WITH WELL
T	THERMOMETER WITH WELL (DIAL TYPE)
	THERMOMETER WITH WELL (FILLED TYPE)
T	AVERAGING TEMPERATURE SENSOR
T	LOW LIMIT TEMPERATURE SWITCH
T	PROBE TEMPERATURE SENSOR
P	PRESSURE SENSOR (FURNISHED WITH BALL VALVE)
P	PRESSURE GAUGE (FURNISHED WITH BALL VALVE)
	DIFFERENTIAL PRESSURE SENSOR
P	PRESSURE SENSOR (DUCT MOUNTED)
SP	STATIC SWITCH
AI	ANALOG INPUT
AO	ANALOG OUTPUT
FM	FLOW METER
F	FLOW SWITCH
FS	FLOW SENSOR
FS	AIR FLOW SWITCH
FM	DUCT FLOW METER
DSD	DUCT SMOKE DETECTOR
	HEATING/ COOLING COIL
	AIR BLENDER
	MANUAL MOTOR STARTER W/THERMAL OVERLOAD
	FAN
MTR	MOTOR
R	CONTACTOR
	PUMP
DI	DIGITAL INPUT
DO	DIGITAL OUTPUT
H	HUMIDITY SENSOR
H	HUMIDITY SENSOR (DUCT MOUNTED)
C	CARBON MONOXIDE SENSOR
C_2	CARBON DIOXIDE SENSOR
C	CARBON MONOXIDE SENSOR (DUCT MOUNTED)
C_2	CARBON DIOXIDE SENSOR (DUCT MOUNTED)
	FILTER
	TERMINAL AIR BOX
O	OCCUPANCY SENSOR
S	SENSOR
ACT	ACTUATOR
CS	CURRENT SWITCH
	NORMALL CLOSED CONTACT
	NORMALLY OPEN CONTACT
	OPPOSED BLADE DAMPER
	PARALLEL BLADE DAMPER

TEMPERATURE CONTROL GENERAL NOTES:

1. REFER TO EQUIPMENT SCHEDULES TO CROSS REFERENCE WHICH CONTROL DIAGRAMS APPLY TO WHICH ITEMS OF EQUIPMENT. REFER TO TERMINAL AIR BOX (TAB) SCHEDULES FOR TEMP SENSOR REQUIREMENTS FOR EACH TAB.
2. EACH D.I., D.O., A.I. AND A.O. POINT SHOWN FOR ALL CONTROL DIAGRAMS SHALL BE DISCRETE FROM ALL OTHER POINTS EXCEPT AS SPECIFICALLY NOTED.
3. ALL WIRING, CONTROL COMPONENTS, DEVICES AND PROGRAMMING SHOWN ON THESE CONTROL DRAWINGS SHALL BE PROVIDED BY THE TCC UNLESS SPECIFICALLY NOTED OTHERWISE.
4. ALL ACTUATORS SHALL BE OF THE ELECTRICAL TYPE FOR THIS PROJECT UNLESS AN ACTUATOR IS SPECIFICALLY INDICATED ON THE DRAWINGS OR SPECIFICATIONS TO BE PNEUMATIC.
5. ALL MODULATING DAMPER AND VALVE ACTUATORS SHOWN WITH POSITION FEEDBACK SHALL HAVE THE VALVE POSITION DISPLAYED ON GRAPHICAL SCREEN ADJACENT TO THE DAMPER/VALVE COMMAND SIGNAL. DISPLAYED VALVE POSITION SHALL BE FROM THE FEEDBACK DEVICE/CIRCUIT (OUTPUT SIGNAL FROM THE FMCS TO THE ACTUATOR IS NOT ACCEPTABLE)
6. MODULATING SIGNALS SHALL BE DISPAYED AS % OPEN (SIGNALS DISPLAYED AS % CLOSED ARE NOT ACCEPTABLE).
7. PRESSURE TRANSMITTERS WHOSE SIGNAL IS UTILIZED FOR MAINTAINING DUCT STATIC PRESSURE SHALL BE WIRED DIRECTLY TO THE CONTROLLER WHICH MODULATES FAN SPEED. SIGNAL SHALL BE COMPLETELY INDEPENDENT OF THE FMCS NETWORK.
8. PRESSURE TRANSMITTERS WHOSE SIGNAL IS UTILIZED FOR MAINTAINING DIFFERENTIAL PRESSURE OF ANY PUMPED WATER SYSTEM (E.G. HEATING HOT WATER, CHILLED WATER AND THE LIKE) SHALL BE WIRED DIRECTLY TO THE CONTROLLER WHICH MODULATES PUMP SPEED. SIGNAL SHALL BE COMPLETELY INDEPENDENT OF THE FMCS NETWORK.
9. ALL CONTROL COMPONENTS SUCH AS RELAYS, SWITCHES, DDC CONTROLLERS, ETC. SHALL BE MOUNTED IN STEEL ENCLOSURES WITH STEEL MOUNTING BACKPLATES PER SPECIFICATION 23 09 00.
10. EACH CONTROL PANEL SHALL HAVE A LAMINATED COPY OF THE APPLICABLE SEQUENCE OF OPERATION AND CONTROL DIAGRAM INDICATING THE POINTS, COMPONENTS AND OPERATION OF EQUIPMENT ASSOCIATED WITH EACH PANEL. REFER TO SECTION 23 09 00 FOR ADDITIONAL REQUIREMENTS.
11. TCC SHALL WIRE THE CONTROL SIGNAL FROM THE ASSOCIATED AIR HANDLING UNIT RTU CONTROL PANEL TO CONTROL THE OPERATION OF SMOKE DAMPERS IN ACCORDANCE WITH SEQUENCE OF OPERATION. TCC SHALL PROVIDE ALL WIRING, CONDUIT, TRANSFORMERS, FUSING AND ALL OTHER ELECTRICAL COMPONENTS REQUIRED FOR COMPLETE INSTALLATION.
12. TCC SHALL EXTEND CONTROL SIGNAL FROM ADDRESSABLE RELAY DEVICE SERVING EACH AIR HANDLING UNIT. REFER TO ELECTRICAL DRAWINGS FOR LOCATIONS. TCC SHALL EXTEND AND TERMINATE WIRING AS REQUIRED FOR EQUIPMENT SHUTDOWN.
13. ELEMENT LENGTHS FOR BOTH MIXED AIR TEMP SENSORS AND LOW LIMIT TEMP SWITCHES SHALL BE MINIMUM 1 LINEAR FOOT PER SQUARE FOOT OF COIL SURFACE AREA. PROVIDE MULTIPLE SENSORS AND SWITCHES AS NEEDED TO ACHIEVE REQUIRED ELEMENT LENGTHS. LOCATE RESET SWITCHES MAX. 6'-6" ABOVE ADJACENT STANDING SURFACE (I.E. ROOF, PLATFORM OR FLOOR) SO THE RESET SWITCH CAN BE CYCLED WITHOUT THE NEED FOR A LADDER.
14. TO PREVENT GENERATOR OVERLOADING, TCC SHALL PROGRAM A STAGGERED START TIME FOR ALL MECHANICAL EQUIPMENT THAT IS CONTROLLED BY FMCS TO INCLUDE, BUT NOT LIMITED TO, AIR HANDLERS, PUMPS, EXHAUST FANS, AND CHILLERS. THE FIRST EQUIPMENT SHALL START 2 MINUTES (ADJ.) FROM THE TIME THE FMCS RECEIVES THE SIGNAL THAT THE TRANSFER SWITCH CHANGED TO EMERGENCY POWER SOURCE WITH ALL EQUIPMENT BEING ENERGIZED WITHIN A 20 MINUTE (ADJ.) TIME SPAN. COORDINATE ORDER OF EQUIPMENT STAGING WITH OWNER'S REPRESENTATIVE.
15. CONTROL DIAGRAMS ARE SCHEMATIC IN NATURE AND DO NOT SHOW ALL REQUIRED CONTROL DEVICES AND COMPONENTS. REFER TO FLOOR PLANS, FLOW DIAGRAMS AND DETAILS FOR ADDITIONAL CONTROL DEVICES, COMPONENTS AND REQUIREMENTS NOT SHOWN ON THESE CONTROL DRAWINGS.
16. TCC SHALL PROVIDE ALL CONTROL COMPONENTS AND ACCESSORIES AS REQUIRED FOR EQUIPMENT TO BE CONTROLLED AS DESCRIBED IN THE SEQUENCE OF OPERATION REGARDLESS OF WHETHER ALL CONTROL COMPONENTS OR POINTS ARE SHOWN IN THE ASSOCIATED CONTROL DIAGRAM.

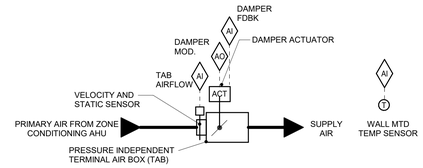

SEQUENCE OF OPERATION:

- FMCS TAB CONTROLLER SHALL MODULATE THE TAB DAMPER TO MAINTAIN SPACE TEMPERATURE OF 70°F (ADJ.) FOR HEATING AND 78°F (ADJ.) FOR COOLING BASED ON A SIGNAL FROM A WALL MOUNTED TEMPERATURE SENSOR. SEE DRAWINGS FOR TEMPERATURE SENSOR REQUIREMENTS. SPACES WITH ADJUSTABLE THERMOSTATS WILL ALLOW A +/- 3°F (ADJ.) OFFSET FROM THE DDC SETPOINT.
- AT FULL COOLING, THE TAB SHALL BE OPEN TO MAXIMUM CFM POSITION.
- UPON A FALL IN SPACE TEMPERATURE, THE TAB SHALL MODULATE CLOSED UNTIL SPACE SETPOINT IS MAINTAINED, OR UNTIL IT REACHES ITS MINIMUM SCHEDULED CFM POSITION PER THE TAB SCHEDULE.
- THE FMCS SHALL UTILIZE DAMPER FEEDBACK FROM ALL TERMINAL AIR BOX POSITIONS TO RESET THE SUPPLY DUCT DIFFERENTIAL STATIC PRESSURE.

ALARMS, INTERLOCKS & SAFETIES:

SEND AN ALARM TO THE FMCS OPERATOR INTERFACE IF THE SPACE TEMPERATURE IS MORE THAN 10°F (ADJ.) ABOVE OR BELOW SETPOINT.

1 TAB CONTROL W/ COOLING ONLY

NO SCALE

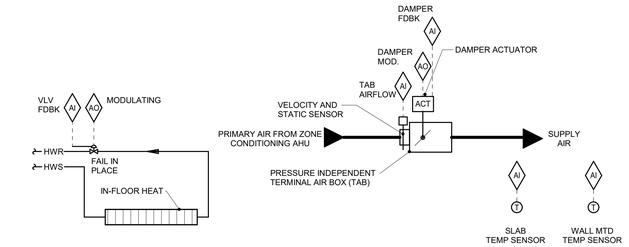

SEQUENCE OF OPERATION:

- FMCS TAB CONTROLLER SHALL MODULATE THE TAB DAMPER AND IN-FLOOR CONTROL VALVE TO MAINTAIN A OCCUPIED SPACE TEMPERATURE OF 70°F (ADJ.) IN HEATING MODE AND 74°F(ADJ.) IN COOLING MODE BASED ON A SIGNAL FROM A WALL MOUNTED TEMPERATURE SENSOR. SEE DRAWINGS FOR TEMPERATURE SENSOR REQUIREMENTS. SPACES WITH ADJUSTABLE THERMOSTATS WILL ALLOW A +/- 3°F (ADJ.) OFFSET FROM THE DDC SETPOINT.
- AT FULL COOLING, THE TAB SHALL BE OPEN TO MAXIMUM CFM POSITION. THE IN-FLOOR RADIATION CONTROL VALVE SHALL BE CLOSED.
- UPON A FALL IN SPACE TEMPERATURE, THE TAB SHALL MODULATE CLOSED UNTIL SPACE SETPOINT IS MAINTAINED, OR UNTIL IT REACHES ITS MINIMUM SCHEDULED CFM POSITION PER THE TAB SCHEDULE. THE IN-FLOOR HEAT CONTROL VALVE SHALL BE CLOSED.
- AS SPACE TEMP DROPS BELOW SETPOINT AND TAB DAMPER IS AT MINIMUM SCHEDULED CFM, TAB CONTROLLER SHALL MODULATE THE IN-FLOOR HEAT CONTROL VALVE OPEN AS REQUIRED TO MAINTAIN SPACE TEMP. MAXIMUM TEMPERATURE OF IN-FLOOR HEAT SLAB SHALL BE LIMITED FROM EXCEEDING 85°F (ADJ.) IN LOCKER ROOMS AND BATHOOMS AND 90°F (ADJ.) IN ALL OTHER AREAS. A SEPERATE PID LOOP SHALL BE USED FOR CONTROL OF VALVE OPERATION VERSUS DAMPER OPERATION.
- THE FMCS SHALL UTILIZE DAMPER FEEDBACK FROM ALL TERMINAL AIR BOX POSITIONS TO RESET THE SUPPLY DUCT DIFFERENTIAL STATIC PRESSURE.

ALARMS, INTERLOCKS & SAFETIES:

SEND AN ALARM TO THE FMCS OPERATOR INTERFACE IF THE SPACE TEMPERATURE IS MORE THAN 10°F (ADJ.) ABOVE OR BELOW SETPOINT.

2 TAB CONTROL WITH IN-FLOOR HEAT

NO SCALE

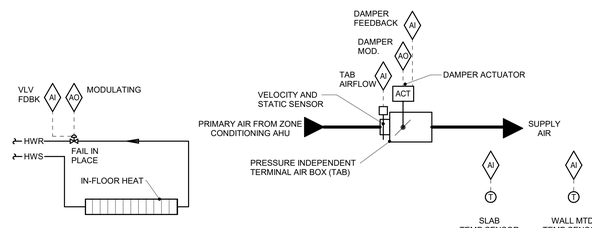

SEQUENCE OF OPERATION:

- FMCS TAB CONTROLLER SHALL MODULATE THE TAB DAMPER AND PERIMETER RADIATION CONTROL VALVE TO MAINTAIN A OCCUPIED SPACE TEMPERATURE OF 70°F (ADJ.) IN HEATING MODE AND 74°F(ADJ.) IN COOLING MODE BASED ON A SIGNAL FROM A WALL MOUNTED TEMPERATURE SENSOR. SEE DRAWINGS FOR TEMPERATURE SENSOR REQUIREMENTS. SPACES WITH ADJUSTABLE THERMOSTATS WILL ALLOW A +/- 3°F (ADJ.) OFFSET FROM THE DDC SETPOINT.
- AT FULL COOLING, THE TAB SHALL BE OPEN TO MAXIMUM CFM POSITION.
- UPON A FALL IN SPACE TEMPERATURE, THE TAB SHALL MODULATE CLOSED UNTIL SPACE SETPOINT IS MAINTAINED, OR UNTIL IT REACHES ITS MINIMUM SCHEDULED CFM POSITION PER THE TAB SCHEDULE. THE PERIMETER RADIATION CONTROL VALVE SHALL BE CLOSED.
- AS SPACE TEMP DROPS BELOW SETPOINT AND TAB DAMPER IS AT MINIMUM SCHEDULED CFM, TAB CONTROLLER SHALL MODULATE THE IN-FLOOR HEAT CONTROL VALVE OPEN AS REQUIRED TO MAINTAIN SPACE TEMP. MAXIMUM TEMPERATURE OF IN-FLOOR HEAT SLAB SHALL BE LIMITED FROM EXCEEDING 85°F (ADJ.) IN LOCKER ROOMS AND BATHOOMS AND 90°F (ADJ.) IN ALL OTHER AREAS.
- THE FMCS SHALL UTILIZE DAMPER FEEDBACK FROM ALL TERMINAL AIR BOX POSITIONS TO RESET THE SUPPLY DUCT DIFFERENTIAL STATIC PRESSURE.

OCCUPANCY SENSOR CONTROL:

- BUILDING IS OCCUPIED 24 HOURS PER DAY - 7 DAYS PER WEEK.
- IF OCCUPANCY SENSOR INDICATES OCCUPANCY, THEN THE SPACE TEMPERATURE SETPOINT AND MINIMUM AIRFLOW RATES SHALL BE PER 'MIN.' SCHEDULED AIRFLOW RATE.
- IF OCCUPANCY SENSOR INDICATES UNOCCUPANCY, THEN THE SPACE TEMPERATURE SETPOINT SHALL BE MAINTAINED AT 70°F(ADJ.) FOR HEATING MODE AND 79°F(ADJ.) FOR COOLING MODE AND THE MINIMUM AIRFLOW RATE SHALL BE RESET TO 0 CFM (ADJ.).
- ALL PROGRAMMING FOR THE ABOVE SHALL RESIDE IN THE TERMINAL UNIT CONTROLLED, AND SUPERVISORY CONTROLLER SHALL NOT BE REQUIRED TO RESET ANY FLOW OR TEMPERATURE SETPOINTS BASED ON OCCUPANCY SENSOR STATUS.

ALARMS, INTERLOCKS & SAFETIES:

SEND AN ALARM TO THE FMCS OPERATOR INTERFACE IF THE SPACE TEMPERATURE IS MORE THAN 10°F (ADJ.) ABOVE OR BELOW SETPOINT.

3 TAB CONTROL WITH IN-FLOOR HEAT, AND OCC SENSOR

NO SCALE

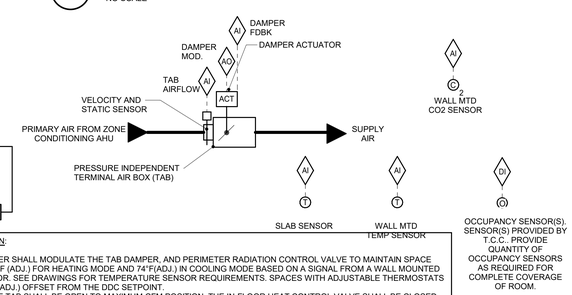

SEQUENCE OF OPERATION:

- FMCS TAB CONTROLLER SHALL MODULATE THE TAB DAMPER, AND PERIMETER RADIATION CONTROL VALVE TO MAINTAIN SPACE TEMPERATURE OF 70°F (ADJ.) FOR HEATING MODE AND 74°F(ADJ.) IN COOLING MODE BASED ON A SIGNAL FROM A WALL MOUNTED TEMPERATURE SENSOR. SEE DRAWINGS FOR TEMPERATURE SENSOR REQUIREMENTS. SPACES WITH ADJUSTABLE THERMOSTATS WILL ALLOW A +/- 3°F (ADJ.) OFFSET FROM THE DDC SETPOINT.
- AT FULL COOLING, THE TAB SHALL BE OPEN TO MAXIMUM CFM POSITION. THE IN-FLOOR HEAT CONTROL VALVE SHALL BE CLOSED.
- UPON A FALL IN SPACE TEMPERATURE, THE TAB SHALL MODULATE CLOSED UNTIL SPACE SETPOINT IS MAINTAINED, OR UNTIL IT REACHES ITS MINIMUM SCHEDULED CFM POSITION PER THE TAB SCHEDULE. THE PERIMETER RADIATION CONTROL VALVE SHALL BE CLOSED.
- AS SPACE TEMP DROPS BELOW SETPOINT AND TAB DAMPER IS AT MINIMUM SCHEDULED CFM, TAB CONTROLLER SHALL MODULATE THE IN-FLOOR HEAT CONTROL VALVE OPEN AS REQUIRED TO MAINTAIN SPACE TEMP. MAXIMUM TEMPERATURE OF IN-FLOOR HEAT SLAB SHALL BE LIMITED FROM EXCEEDING 85°F (ADJ.) IN LOCKER ROOMS AND BATHOOMS AND 90°F (ADJ.) IN ALL OTHER AREAS.
- THE FMCS SHALL UTILIZE DAMPER FEEDBACK FROM ALL TERMINAL AIR BOX POSITIONS TO RESET THE SUPPLY DUCT DIFFERENTIAL STATIC PRESSURE.

OCCUPANCY SENSOR CONTROL:

- BUILDING IS OCCUPIED 24 HOURS PER DAY - 7 DAYS PER WEEK.
- IF OCCUPANCY SENSOR INDICATES OCCUPANCY, THEN THE SPACE TEMPERATURE SETPOINT AND MINIMUM AIRFLOW RATES SHALL BE PER 'MIN.' SCHEDULED AIRFLOW RATE.
- IF OCCUPANCY SENSOR INDICATES UNOCCUPANCY, THEN THE SPACE TEMPERATURE SETPOINT SHALL BE MAINTAINED AT 70° F(ADJ.) FOR HEATING MODE AND 79°F(ADJ.) FOR COOLING MODE AND THE MINIMUM AIRFLOW RATE SHALL BE RESET TO 0 CFM (ADJ.).
- ALL PROGRAMMING FOR THE ABOVE SHALL RESIDE IN THE TERMINAL UNIT CONTROLLED, AND SUPERVISORY CONTROLLER SHALL NOT BE REQUIRED TO RESET ANY FLOW OR TEMPERATURE SETPOINTS BASED ON OCCUPANCY SENSOR STATUS.

CO2 SENSOR CONTROL:

- CO2 LEVELS SHALL ALTER SEQUENCES ONLY WHEN OCCUPANCY SENSOR INDICATES THE SPACE IS OCCUPIED.
- NOMINAL/ SETPOINT CO2 LEVEL IS 1000 (ADJ.) PPM.
- IF CO2 LEVEL IS BELOW SETPOINT, THE TAB SHALL OPERATE NORMALLY.
- IF CO2 LEVEL IS ABOVE SETPOINT, THE TAB MINIMUM AIRFLOW RATE SHALL RESET TO SCHEDULED "CO2 RESET" AIRFLOW RATE UNTIL CO2 SETPOINT IS MET, AND THEN SHALL MODULATE TO MAINTAIN THE SPACE TEMPERATURE.
- RESET OF THE PRIMARY AIR HANDLING UNIT OUTDOOR AIR AIRFLOW RATE IS NOT REQUIRED FOR LOCAL CO2 CONTROL.
- SUPPLEMENTAL HEAT (IN-FLOOR HEAT) SHALL BE USED TO OFFSET COOLING LOAD IF OVERCOOLING OF SPACE OCCURS

ALARMS, INTERLOCKS & SAFETIES:

SEND AN ALARM TO THE FMCS OPERATOR INTERFACE IF THE SPACE TEMPERATURE IS MORE THAN 10°F (ADJ.) ABOVE OR BELOW SETPOINT.

4 TAB CONTROL WITH IN-FLOOR HEAT, CO2, & OCCUPANCY SENSOR

NO SCALE

IMEG
1800 DEMING WAY, SUITE 200
MIDDLETON, WI 53562
608.223.9600 FAX: 608.836.0415
www.imegcorp.com
PROJECT # 17001140.00

IMEG CORP RESERVES PROPRIETARY RIGHTS, INCLUDING COPYRIGHTS, TO THIS DRAWING AND THE DATA SHOWN THEREON. SAID DRAWING AND/OR DATA ARE THE EXCLUSIVE PROPERTY OF IMEG CORP AND SHALL NOT BE USED OR REPRODUCED FOR ANY OTHER PROJECT WITHOUT THE EXPRESS WRITTEN APPROVAL AND PARTICIPATION OF IMEG CORP. © 2017 IMEG CORP.

REFERENCE SCALE IN INCHES

0 1 2 3

OPN ARCHITECTS
301 N BROOM STREET #100
MADISON, WI 53703
608-819-0260 PHONE
www.opnarchitects.com
opn@opnarchitects.com

All reports, plans, specifications, computer files, field data, notes and other documents and instruments prepared by OPN Architects, Inc. as instruments of service shall remain the property of OPN Architects, Inc. OPN Architects, Inc. shall retain all common law, statutory and other reserved rights, including the copyright thereto.

© 2017 OPN Architects, Inc.

Owner

City of Madison Fire Department
314 W. Dayton St.
Madison, WI 53703

Project

Madison Fire Station 14
3201 Dairy Drive
Madison, WI 53718

Civil Engineer

Snyder & Associates, Inc
5010 Voges Rd
Madison WI, 53718
P. 608-838-0444

Structural Engineer

IMEG
1800 Deming Way #200
Middleton, WI 53562
P. 608-223-9600

Mechanical Engineer

IMEG
1800 Deming Way #200
Middleton, WI 53562
P. 608-223-9600

Electrical Engineer

IMEG
1800 Deming Way #200
Middleton, WI 53562
P. 608-223-9600

Key Plan

Sheet Issue Date	
BID DOCUMENTS	11/03/17

Revision	Date

Drawing

CONTROL DIAGRAMS - MECHANICAL

City of Madison Contract No. **8027**
OPN Project No. **17207000**

M450

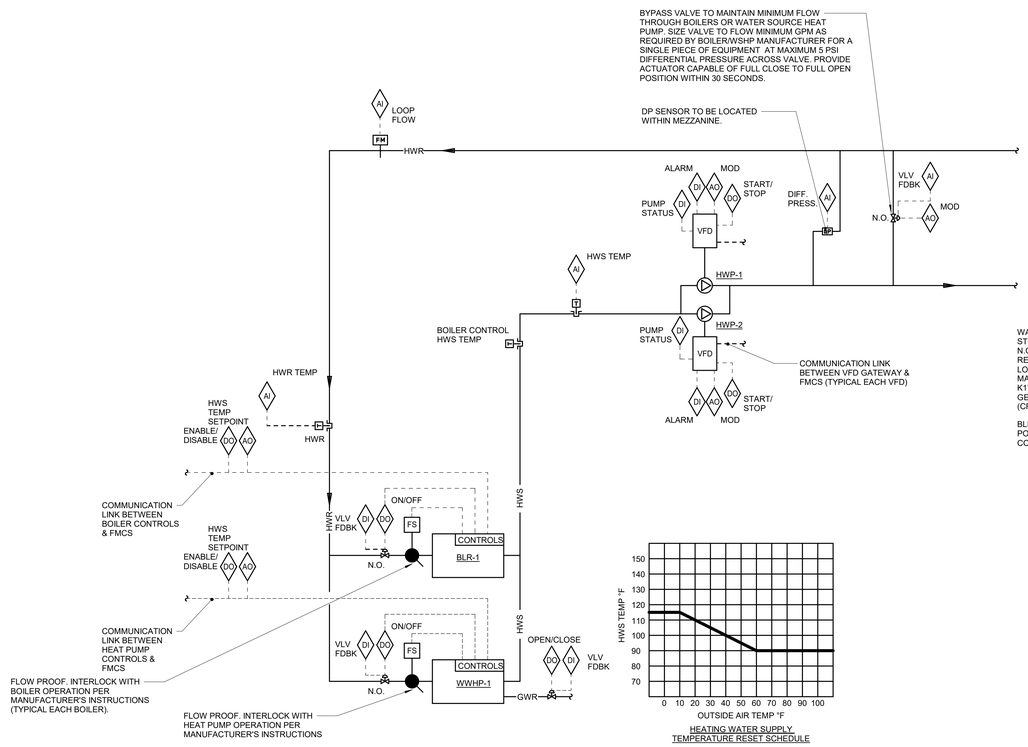

HEATING WATER SUPPLY TEMPERATURE RESET SCHEDULE

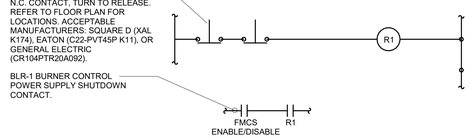

EMERGENCY BOILER SHUTDOWN

PROVIDE TWO-COLOR ENGRAVED PHENOLIC LABELS WITH MIN. 1/2" HIGH WHITE LETTERS ON RED BACKGROUND FOR EACH EMERGENCY BOILER SHUTDOWN SWITCH. SECURELY MOUNT TO WALL ABOVE EACH SWITCH.

ALARMS, INTERLOCKS, AND SAFETIES:
TCC SHALL PROVIDE EMERGENCY BOILER SHUTDOWN SWITCH AT MEZZANINE EXIT POINT MEETING CSD-1 REQUIREMENTS. ACTIVATION OF SWITCH SHALL INTERRUPT POWER TO ALL BOILER CONTROLS VIA BOILER SAFETY SHUTDOWN CONTACTS.

EMERGENCY BOILER SHUTDOWN

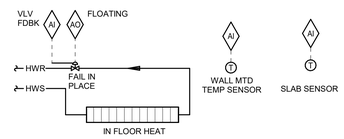

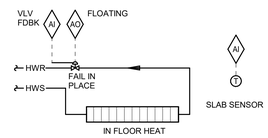

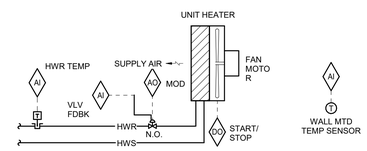

SEQUENCE OF OPERATION:
HEATING WATER BOILER AND WATER-TO-WATER HEAT PUMP SHALL HAVE UNIT MOUNTED CONTROLS PROVIDED BY THE BOILER AND HEAT PUMP MANUFACTURER. TCC SHALL INTERFACE WITH BOILER AND HEAT PUMP MANUFACTURER CONTROLS AS DESCRIBED IN THIS SEQUENCE OF OPERATION. BOILER AND HEAT PUMP MANUFACTURER SHALL PROVIDE A GATEWAY INTERFACE CARD THAT IS COMPATIBLE WITH THE COMMUNICATION PROTOCOL OF THE FMCS NETWORK. SEQUENCES OF OPERATION FOR BOTH BOILER CONTROL SYSTEM AND FMCS SHALL BE AS FOLLOWS:

FMCS SHALL OPERATE HEATING WATER SYSTEM. WHENEVER OUTSIDE AIR TEMPERATURE IS BELOW 70°F AND THERE ARE AT LEAST 2 CALLS FOR HEAT. IF OUTSIDE AIR TEMPERATURE IS BELOW 40°F HEATING SYSTEM SHALL BE ENABLED REGARDLESS OF CALLS FOR HEAT.

HOT WATER PUMPS SEQUENCE OF OPERATION:
ONLY ONE HEATING WATER PUMP SHALL RUN AT TIME. THE SECOND HEATING WATER PUMP IS FULLY REDUNDANT. FMCS SHALL AUTOMATICALLY ROTATE THE LEAD HEATING WATER PUMP ONCE/WEEK (10:00 AM EACH TUESDAY, ADJ.) TO EQUALIZE RUN TIME BETWEEN PUMPS. PROVIDE GRAPHICAL BUTTON ON OPERATOR WORKSTATION GRAPHICAL SCREEN TO ALLOW FMCS OPERATOR TO SWITCH LEAD PUMP TO NEXT ROTATION IN THE EVENT THE CURRENT LEAD PUMP REQUIRES MAINTENANCE.

FMCS SHALL MODULATE SIGNAL TO LEAD PUMP VFD AS REQUIRED TO MAINTAIN HEATING WATER DIFFERENTIAL PRESSURE (DP) SETPOINT. FMCS SHALL RESET HEATING WATER DIFFERENTIAL PRESSURE (DP) SETPOINT AS REQUIRED TO MAINTAIN AT LEAST ONE HEATING WATER VALVE 95% (ADJ.) OPEN. FMCS SHALL UTILIZE COMMAND TO ALL HEATING WATER VALVE POSITIONS TO RESET THE HEATING WATER DIFFERENTIAL PRESSURE. IN NO EVENT SHALL THE FMCS DECREASE THE HEATING WATER (DP) SETPOINT BELOW 4 PSI (ADJ.) OR ABOVE 10 PSI (ADJ.).

BOILER & HEAT PUMP SEQUENCE OF OPERATION:
THE FMCS SHALL ENABLE THE WATER-TO-WATER HEAT PUMP AS THE LEAD SYSTEM IF THE GEOTHERMAL LOOP TEMPERATURE RETURNING FROM THE GEOTHERMAL BORIELD IS ABOVE 38°F (ADJ.) AND OPEN THE ASSOCIATED TWO-POSITION ISOLATION VALVES ON THE HEAT PUMP'S CONDENSER AND EVAPORATOR SECTIONS. THE FMCS SHALL ENERGIZE THE LEAD PUMP. THE HEAT PUMP TW0-POSITION ISOLATION VALVES SHALL BE OPEN EVEN IF THE HEAT PUMP IS NOT FIRING TO ALLOW CIRCULATION THROUGH THE VARIABLE PRIMARY HEATING WATER SYSTEM.

WHEN FMCS ENABLES WATER-TO-WATER HEAT PUMP FMCS SHALL OPEN WATER-TO-WATER HEAT PUMP GWR ISOLATION VALVE. WHEN FMCS DISABLES WATER-TO-WATER HEAT PUMP FMCS SHALL CLOSE ASSOCIATED GWR ISOLATION VALVE.

IF THE GEOTHERMAL LOOP TEMPERATURE RETURNING FROM THE GEOTHERMAL BOREFIELD IS BELOW 38°F (ADJ.) THE FMCS SHALL SWITCH THE BOILER TO THE LEAD HEATING SYSTEM AND HAVE THE WATER-TO-WATER HEAT PUMP AS THE LAG SYSTEM. TWO-POSITION BOILER ISOLATION VALVE OPERATION SHALL BE CONTROLLED BY THE BOILER CONTROL PANEL OF THE RESPECTIVE BOILER THEY SERVE.

THE FMCS SHALL OUTPUT AN ANALOG SIGNAL TO LEAD HEATING SYSTEM (BOILER OR WATER-TO-WATER HEAT PUMP) TO MAINTAIN THE HEATING WATER SUPPLY TEMPERATURE SETPOINT PER THE HEATING WATER SUPPLY TEMPERATURE RESET SCHEDULE. THE BOILER OR WATER-TO-WATER HEAT PUMP'S INTERNAL CONTROLS SHALL MODULATE HEAT AS REQUIRED TO MAINTAIN SETPOINT. THE FMCS SHALL STAGE ON THE LAG HEATING SYSTEM (BOILER OR WATER-TO-WATER HEAT PUMP) TO MAINTAIN THE SYSTEM HEATING WATER SUPPLY TEMPERATURE PER THE HEATING WATER SUPPLY TEMPERATURE RESET SCHEDULE. FMCS SHALL LIMIT LAG HEAT SOURCE FROM OPERATING UNLESS PRIMARY HEAT SOURCE IS AT 100% FIRING RATE (ADJ.) FOR 10 (ADJ.) MINUTES WITH HEATING WATER SUPPLY TEMPERATURE BELOW SETPOINT AND HEATING WATER FLOW RATE IS ABOVE MINIMUM FLOW RATE OF BOTH BOILERS. THIS IS TO PREVENT OVERPUMPING OF SYSTEM.

THE FOLLOWING HEAT PUMP CONTROL PANEL POINTS (TO INCLUDE BUT NOT LIMITED TO) SHALL BE CONTROLLED BY THE FMCS AND DISPLAYED ON THE OPERATOR WORKSTATION GRAPHICAL SCREEN:
- HEAT PUMP STATUS: ENABLE/DISABLE
- HEAT PUMP OUTPUT: PERCENTAGE
- HEAT PUMP OUTLET WATER TEMPERATURE SETPOINT: [°F]

THE FOLLOWING BOILER CONTROL PANEL POINTS (TO INCLUDE BUT NOT LIMITED TO) SHALL BE CONTROLLED BY THE FMCS AND DISPLAYED ON THE OPERATOR WORKSTATION GRAPHICAL SCREEN:
- BOILER STATUS: ENABLED/DISABLE
- BOILER OUTLET WATER TEMPERATURE SETPOINT: [°F]

THE FOLLOWING BOILER CONTROL PANEL POINTS (TO INCLUDE BUT NOT LIMITED TO) SHALL BE MONITORED BY THE FMCS AND DISPLAYED ON THE OPERATOR WORKSTATION GRAPHICAL SCREEN:
- BOILER STATUS: DISABLED/STANDBY/MANUAL OPERATION/REMOTE OPERATION/AUTO/FAULT
- FIRING RATE INPUT: [0 - 100%]
- FIRING RATE OUTPUT: [0 - 100%]
- ACTIVE SETPOINT: [°F]
- SYSTEM HWR TEMP: [°F]
- SYSTEM HWS TEMP: [°F]
- FAULT MESSAGE DISPLAY CODE: [NUMERICAL]
- RUN CYCLES: [NUMERICAL]
- RUN HOURS: [NUMERICAL]

ALARMS, INTERLOCKS & SAFETIES:
BOILER CONTROLS SHALL BE PROGRAMMED TO MAINTAIN CONSTANT SETPOINT (LAST KNOWN VALUE) IN THE EVENT THE FMCS NETWORK COMMUNICATION SIGNAL IS LOST.

ALL CONTROLLED AND MONITORED POINTS LISTED IN THE BOILER CONTROL PANEL SEQUENCE ABOVE SHALL BE DISPLAYED ON THE OPERATOR WORKSTATION GRAPHICAL SCREEN.

MINIMUM HEATING WATER FLOW CONTROL:
FMCS SHALL MODULATE THE HEATING WATER BYPASS CONTROL VALVE AS REQUIRED TO MAINTAIN MINIMUM FLOW THROUGH EACH OPERATIONAL WATER-TO-WATER HEAT PUMP AND BOILER. TCC SHALL VERIFY THE MINIMUM FLOW LIMIT OF EACH HEAT PUMP/BOILER WITH EQUIPMENT MANUFACTURER. ADEQUATE FLOW THROUGH EACH HEAT PUMP/BOILER SHALL BE DETERMINED BY THE FLOW METER IN THE HEATING WATER RETURN PIPING. MINIMUM FLOW SHALL BE STAGED WITH THE RESPECTIVE EQUIPMENT IN OPERATION SO AS MORE EQUIPMENT IS IN CALLED INTO OPERATION THE MINIMUM FLOW IS THE SUMMATION OF THE MINIMUM FLOWS OF ALL PIECES OF OPERATING EQUIPMENT.

ALARMS, INTERLOCKS & SAFETIES:
TCC SHALL COORDINATE ALL SAFETY AND INTERLOCK REQUIREMENTS WITH BOILER MANUFACTURER. TCC SHALL COORDINATE AND PROVIDE THE INSTALLATION AND WIRING OF BOILER WATER DIFFERENTIAL PRESSURE/FLOW SWITCHES AND OTHER COMPONENTS PROVIDED WITH THE BOILER AS REQUIRED FOR PROPER OPERATION. TCC SHALL PROVIDE AND TERMINATE ALL SAFETY AND INTERLOCK WIRING WITH BOILER CONTROL PANELS AS REQUIRED.

FMCS SHALL AUTOMATICALLY ENABLE THE LAG HEATING WATER PUMP TO RUN IN THE EVENT THE LEAD HEATING WATER PUMP FAILS TO OPERATE.

TCC SHALL VERIFY THE ACCEPTABLE TEMPERATURE RANGES THE BOILERS ARE APPROVED TO OPERATE AT AS PUBLISHED IN THE BOILER MANUFACTURER'S LITERATURE. IF THE TEMPERATURE RANGES LISTED IN THE MANUFACTURER'S LITERATURE DIFFER FROM THOSE IN THIS SEQUENCE OF OPERATION, CONTACT PROJECT ARCHITECT/ENGINEER FOR DIRECTION.

AN ALARM SHALL BE INDICATED TO THE FMCS OPERATOR WORKSTATION IN THE EVENT ANY OF THE FOLLOWING OCCUR:
- HWR TEMPERATURE DROPS BELOW 50°F (ADJ.) FOR 5 MINUTES (ADJ.) (AUTO RESET).
- HWS TEMPERATURE RISES MORE THAN 10°F (ADJ.) ABOVE SETPOINT (AUTO RESET).
- HWS TEMPERATURE DROPS MORE THAN 10°F (ADJ.) BELOW SETPOINT (AUTO RESET).
- AN ALARM IS INDICATED AT ANY BOILER ALARM PANEL.
- AN ALARM IS INDICATED AT ANY HEAT PUMP ALARM PANEL.
- AN ALARM IS INDICATED AT ANY PUMP VFD
- SHOULD THE FMCS COMMAND THE LEAD HEATING WATER PUMP TO OPERATE AND THE PUMP FAILS TO DO SO AS DETERMINED BY THE VFD STATUS, AN ALARM SHALL BE INDICATED AT THE FMCS OPERATOR WORKSTATION AND THE LAG HW PUMP SHALL AUTOMATICALLY START.

1 CONDENSING HEATING WATER BOILER CONTROL - VARIABLE PRIMARY

NO SCALE

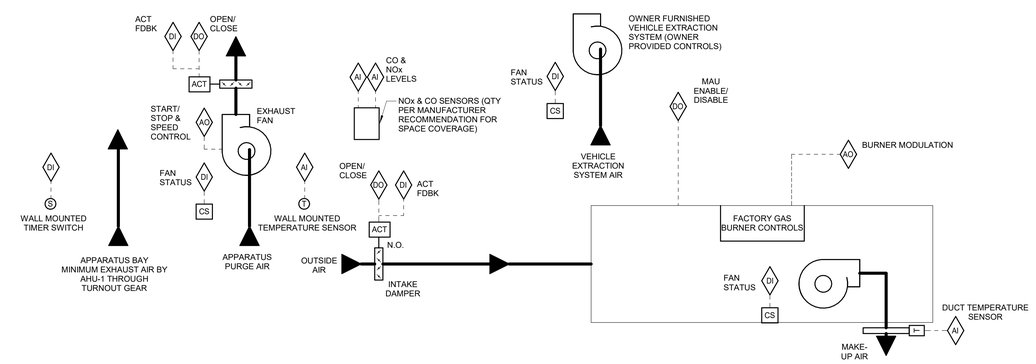

SEQUENCE OF OPERATION:
APPARATUS BAY MINIMUM EXHAUST AIR IS PROVIDED THROUGH OPERATION OF AHU-1'S EXHAUST FAN. SYSTEM SHALL RUN CONTINUOUSLY 24 HOURS/DAY, 7 DAYS/WEEK. REFER TO AHU SEQUENCE FOR DETAILS.

EXHAUST FAN PURGE FAN (EF-1) SHALL BE STARTED AND STOPPED THROUGH A HAND-OFF-AUTO SWITCH ON THE FACE OF THE MOTOR STARTER. WHEN PLACED IN THE HAND POSITION THE EXHAUST FAN SHALL RUN CONTINUOUSLY. WHEN PLACED IN THE AUTO POSITION THE FMCS SHALL CONTROL FAN OPERATION. WHEN PLACED IN THE OFF POSITION THE EXHAUST FAN MOTOR SHALL BE DE-ENERGIZED.

EXHAUST FAN PURGE FAN (EF-1) SHALL BE CONTROLLED AS FOLLOWS:
- TO PROVIDE COOLING TO THE SPACE WHEN SPACE TEMP RISES ABOVE 76°F (ADJ.) AND OUTSIDE AIR IS AT LEAST 4°F (ADJ.) COOLER THAN SPACE TEMPERATURE FMCS SHALL COMMAND INTAKE AIR DAMPER AND EXHAUST AIR DAMPER TO FULLY OPEN. MAU AND EXHAUST FAN SHALL BE ENABLED AFTER A 30 SECOND DELAY TO ALLOW FOR OPENING OF THE DAMPERS. EXHAUST FAN SPEED SHALL BE AT FULL AIRFLOW IF OWNER FURNISHED VEHICLE EXTRACTION SYSTEM IS NOT OPERATING. IF OWNER FURNISHED VEHICLE EXTRACTION SYSTEM IS OPERATING AS DETECTED BY THE CURRENT SENSOR THE EXHAUST FAN SPEED SHALL BE REDUCED BY 3500 CFM. FINAL RATE SHALL BE DETERMIEND BY BALANCING CONTRACTOR BASED ON EXHAUST RATE OF THE VEHICLE EXTRACTION SYSTEM.
- WHEN SPACE TEMP DROPS BELOW 72°F (ADJ.) MAU AND EXHAUST FAN SHALL BE DISABLED AND THE INTAKE AIR DAMPER AND EXHAUST AIR DAMPER SHALL FULLY CLOSE.
- IN THE EVENT THE CO DETECTORS SENSE THE CONCENTRATION OF CARBON MONOXIDE RISES ABOVE 25 PPM (ADJ.) OR THE CONCENTRATION OF NITROGEN DIOXIDE RISES ABOVE 1 PPM (ADJ.) , FMCS SHALL COMMAND THE INTAKE AIR DAMPER AND EXHAUST AIR DAMPER TO FULLY OPEN. AFTER DAMPERS HAVE PROVEN OPEN THE MAU AND EXHAUST FAN SHALL BE ENABLED. EXHAUST FAN SPEED SHALL BE AT FULL AIRFLOW IF OWNER FURNISHED VEHICLE EXTRACTION SYSTEM IS NOT OPERATING. IF OWNER FURNISHED VEHICLE EXTRACTION SYSTEM IS OPERATING AS DETECTED BY THE CURRENT SENSOR THE EXHAUST FAN SPEED SHALL BE REDUCED BY 3500 CFM. FINAL RATE SHALL BE DETERMIEND BY BALANCING CONTRACTOR BASED ON EXHAUST RATE OF THE VEHICLE EXTRACTION SYSTEM. PURGE FAN OPERATION SHALL CONTINUE UNTIL BOTH CO AND NOx LEVELS FALL BELOW 10 PPM (ADJ.) FOR CO AND 0.4 PPM (ADJ.) FOR NOx.
- A SEPERATE TIMER SWITCH SHALL BE PROVIDED TO MANUALLY ENABLE THE EXHAUST FAN AND MAKEUP AIR UNIT. WHEN TIMER SWITCH IS ENABLED FMCS SHALL COMMAND INTAKE AIR DAMPER AND EXHAUST AIR DAMPER TO FULLY OPEN. MAU AND EXHAUST FAN SHALL BE ENABLED AFTER THE DAMPERS HAVE PROVEN OPEN. EXHAUST FAN SPEED SHALL BE AT FULL AIRFLOW IF OWNER FURNISHED VEHICLE EXTRACTION SYSTEM IS NOT OPERATING. IF OWNER FURNISHED VEHICLE EXTRACTION SYSTEM IS OPERATING AS DETECTED BY THE CURRENT SENSOR THE EXHAUST FAN SPEED SHALL BE REDUCED BY 3500 CFM (ADJ.). FINAL RATE SHALL BE DETERMIEND BY BALANCING CONTRACTOR BASED ON EXHAUST RATE OF THE VEHICLE EXTRACTION SYSTEM.

ONCE ENERGIZED, EXHAUST PURGE FAN AND MAU SHALL CONTINUE TO RUN FOR MIN. 10 MINUTES (ADJ.) TO PREVENT SHORT CYCLING.

MAU SHALL HAVE INTERNAL CONTROLS PER SPECIFICATION 23 74 23.13. FMCS SHALL OUTPUT ENABLE/DISABLE AND BURNER MODULATION TO THE MAU TO MAINTAIN A 60°F (ADJ.) DISCHARGE AIR TEMPERATURE.

HEATING OF APPARATUS BAY IS SERVED BY TWO IN-FLOOR RADIANT HEATING MANIFOLD ZONES PLUS A UNIT HEATER. A SPACE TEMPERATURE SENSOR SHALL SERVE EACH INDIVIDUAL RADIANT MANIFOLD (NORTH BAY VS SOUTH BAY) OF APPARATUS BAY. WHEN OUTSIDE AIR TEMPERATURE IS BELOW 55°F (ADJ.) THE FMCS SHALL MODULATE THE INFLOOR HEAT CONTROL VALVE TO MAINTAIN A SPACE TEMPERATURE SETPOINT OF 60°F (ADJ.)) WHEN THE OUTSIDE AIR TEMPERATURE IS ABOVE 55°F THE CONTROL VALVE SHALL BE FULLY CLOSED. IF EITHER OF THE SPACE TEMPERATURE SENSORS INDICATES THE SPACE IS 10°F (ADJ.) BELOW SPACE SETPOINT THE UNIT HEATER SHALL BE ENABLED AND THE UNIT HEATER FAN SHALL BE ENERGIZE AND ASSOCIATED CONTROL VALVE SHALL MODULATE TO REHEAT THE SPACE BACK UP TO ORIGINAL SPACE SETPOINT QUICKLY. ONCE TEMPERATURE SETPOINT HAS BEEN ACHIEVED THE UNIT HEATER SHALL BE DISABLED. MAXIMUM TEMPERATURE OF IN-FLOOR HEAT SHALL BE LIMITED FROM EXCEEDING 85° (ADJ.).

ALARMS, INTERLOCKS AND SAFETIES:
AN ALARM SHALL BE GENERATED AT THE FMCS OPERATOR WORKSTATION IN THE FOLLOWING EVENTS:
- THE GAS DETECTORS SENSE A CONCENTRATION OF CARBON MONOXIDE ABOVE 50 PPM (ADJ.) OR A CONCENTRATION OF NITROGEN DIOXIDE ABOVE 5 PPM (ADJ.)
- THE FMCS COMMANDS THE EXHAUST PURGE FAN TO OPERATE AND THE CURRENT SENSING RELAY DETECTS INSUFFICIENT CURRENT DRAW.
- THE FMCS COMMANDS THE MAU TO OPERATE AND THE CURRENT SENSING RELAY DETECTS INSUFFICIENT CURRENT DRAW.
- THE FMCS COMMANDS THE MAU TO OPERATE AND THE DAT IS 10°F (ADJ.) BELOW SETPOINT AFTER A 3 MINUTE (ADJ.) DELAY TO ALLOW FOR BURNER WARMUP. IF THIS ALARM OCCURS MAU AND EXHAUST PURGE FAN SHALL BE DISABLED.
- IF SPACE TEMPERATURE FALLS BELOW 40°F (ADJ.)

2 APPARATUS BAY CONTROLS

NO SCALE

IMEG
1800 DEMING WAY, SUITE 200
MIDDLETON, WI 53562
608.223.9600 FAX: 608.836.0415
www.imegcorp.com
PROJECT # 17001140.00

IMEG CORP RESERVES PROPRIETARY RIGHTS, INCLUDING COPYRIGHTS, TO THIS DRAWING AND THE DATA SHOWN THEREON. SAID DRAWING AND/OR DATA ARE THE EXCLUSIVE PROPERTY OF IMEG CORP AND SHALL NOT BE USED OR REPRODUCED FOR ANY OTHER PROJECT WITHOUT THE EXPRESS WRITTEN APPROVAL AND PARTICIPATION OF IMEG CORP. © 2017 IMEG CORP.

REFERENCE SCALE IN INCHES
0 1 2 3

OPN ARCHITECTS
301 N BROOM STREET #100
MADISON, WI 53703
608-819-0260 PHONE
www.opnarchitects.com
opn@opnarchitects.com

All reports, plans, specifications, computer files, field data, notes and other documents and instruments prepared by OPN Architects, Inc. as instruments of service shall remain the property of OPN Architects, Inc. OPN Architects, Inc. shall retain all common law, statutory and other reserved rights, including the copyright thereto.

© 2017 OPN Architects, Inc.

Owner
City of Madison Fire Department
314 W. Dayton St.
Madison, WI 53703

Project
Madison Fire Station 14
3201 Dairy Drive
Madison, WI 53718

Civil Engineer
Snyder & Associates, Inc
5010 Voges Rd
Madison WI, 53718
P. 608-838-0444

Structural Engineer
IMEG
1800 Deming Way #200
Middleton, WI 53562
P. 608-223-9600

Mechanical Engineer
IMEG
1800 Deming Way #200
Middleton, WI 53562
P. 608-223-9600

Electrical Engineer
IMEG
1800 Deming Way #200
Middleton, WI 53562
P. 608-223-9600

Key Plan

Sheet Issue Date	
BID DOCUMENTS	11/03/17

Revision	Date

Drawing
CONTROL DIAGRAMS - MECHANICAL

City of Madison Contract No. **8027**
OPN Project No. **17207000**

M451

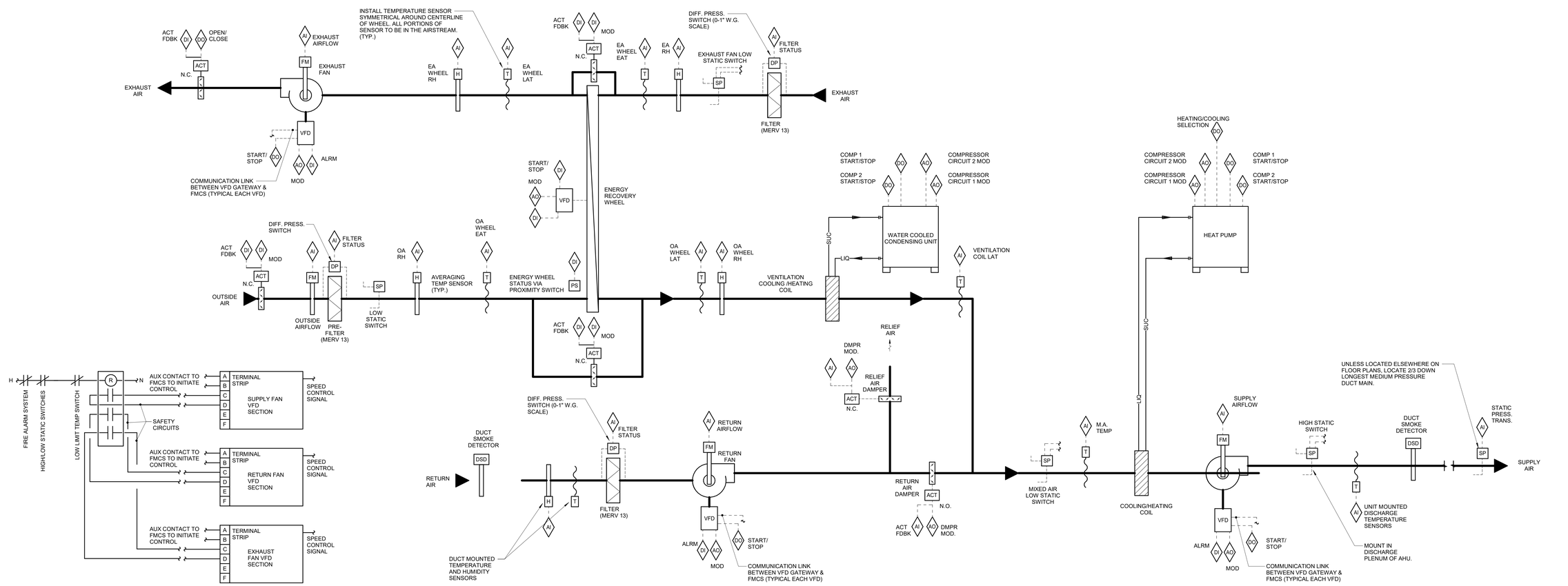

SUPPLY , RETURN & EXHAUST FAN VFD CONTROL

SEQUENCE OF OPERATION:

WHEN AHU/RTU IS INDEXED TO RUN, THE FOLLOWING SHALL OCCUR:
- SUPPLY FAN SHALL BE ENABLED TO RUN.
- WHEN THE SUPPLY FAN HAS STARTED THE RETURN FAN AND EXHAUST FANS SHALL START.

SUPPLY FAN OPERATION:
FMCS SHALL MODULATE SIGNAL TO SUPPLY FAN VFD TO MAINTAIN DUCT STATIC PRESSURE AS MEASURED BY STATIC PRESSURE TRANSMITTER NEAR THE END OF THE CRITICAL DUCT BRANCH.

RETURN FAN OPERATION:
RETURN FAN SHALL BE INDEXED TO RUN WHENEVER THE SUPPLY FAN IS INDEXED TO RUN. FMCS SHALL MODULATE SIGNAL TO RETURN FAN VFD AS REQUIRED TO MAINTAIN THE AIRFLOW OFFSET OF 1925 CFM LESS THAN THE SUPPLY FAN WHEN EF-2 IS DISABLED. WHEN EF-2 IS ENABLED AS DETECTED BY THE CONNECTION WITH THE KITCHEN HOOD CONTROLLER THE OFFSET SHALL BE INCREASED BY EXHAUST FAN AIRFLOW RATE BASED ON A CHARACTERISTATION OF THE FAN SPEED AS DETERMINED BY THE BALANCING CONTRACTOR. REFER TO KITCHEN HOOD/GREAT ROOM CONTROL SEQUENCE FOR ADDITIONAL INFORMATION.

EXHAUST FAN OPERATION:
EXHAUST FAN SHALL BE INDEXED TO RUN WHENEVER THE SUPPLY FAN IS INDEXED TO RUN. FMCS SHALL MODULATE SIGNAL TO EXHAUST FAN VFD AS REQUIRED TO MAINTAIN THE SCHEDULED AIRFLOW.

DUCT STATIC PRESSURE RESET:
FMCS SHALL RESET SUPPLY DUCT STATIC PRESSURE SETPOINT BELOW THE MAXIMUM SETPOINT AS REQUIRED TO MAINTAIN AT LEAST ONE SUPPLY TAB DAMPER 90% (ADJ.) OPEN. FMCS SHALL MONITOR ALL SUPPLY TERMINAL AIR BOX POSITIONS TO RESET THE SUPPLY DUCT DIFFERENTIAL STATIC PRESSURE.

VENTILATION COOLING COIL OPERATION:
WHEN IN MINIMUM OUTSIDE AIR MODE DISCHARGE AIR SET POINT SHALL BE 55ºF (ADJ.). FMCS SHALL STAGE ON COMPRESSORS AND MODULATE DIGITAL SCROLL COMPRESSOR CIRCUITS AS REQUIRED TO MAINTAIN DISCHARGE AIR TEMPERATURE SET POINT. COORDINATE WITH HEAT PUMP UNIT MANUFACTURER TO MAINTAIN MINIMUM RUNTIMES OF COMPRESSORS TO PREVENT SHORT CIRCUITING OF SYSTEM. VENTILATION COIL COOLING OPERATION SHALL BE DISABLED WHEN OUTSIDE AIR TEMPERATURE IS BELOW 45°F (ADJ.).

WHEN IN ECONOMIZER MODE, FMCS SHALL NOT STAGE ON COMPRESSORS UNLESS RETURN AIR DAMPER IS LESS THAN 5% (ADJ.) OPEN AND RELIEF AIR DAMPER IS GREATER THAN 95% (ADJ.) OPEN.

DISCHARGE AIR TEMPERATURE SET POINT OF UNIT:
DISCHARGE AIR SETPOINT SHALL BE 55ºF (ADJ.) WITH RESET AS DISCUSSED BELOW.

DISCHARGE AIR TEMPERATURE CONTROL:
AT FULL HEATING THE ENERGY RECOVERY WHEEL SHALL BE ROTATING AT FULL SPEED WITH THE BYPASS DAMPERS CLOSED AND THE COOLING/HEATING COIL COMPRESSORS ARE OPERATING IN HEATING MODE WITH THE DIGITAL SCROLL COMPRESSORS MODULATING TO MAINTAIN SETPOINT. WHENEVER THE DISCHARGE AIR TEMPERATURE IS ABOVE SETPOINT THE FOLLOWING SHALL OCCUR:
- THE ENERGY RECOVERY WHEEL VFD SHALL MODULATE SPEED OF WHEEL TO MAINTAIN SETPOINT.
- UNIT SHALL ENTER ECONOMIZER OPERATION AND THE RELIEF AIR AND RETURN AIR DAMPERS SHALL MODULATE IN OPPOSITION TO MAINTAIN SETPOINT. THE ENERGY RECOVERY WHEEL SHALL BE DISABLED DURING ECONOMIZER OPERATION WITH THE BYPASS DAMPERS OPEN.
- IF THE ECONOMIZER SEQUENCE CANNOT MAINTAIN SETPOINT, THE COOLING COIL COMPRESSORS SHALL SWITCH TO COOLING MODE AND SHALL MODULATE TO MAINTAIN SETPOINT AND THE UNIT SHALL REMAIN IN FULL ECONOMIZER.
- THE ECONOMIZER SEQUENCE SHALL BE DISABLED AT AN OUTSIDE AIR DRY BULB TEMPERATURE IS HIGHER THAN THE RETURN AIR TEMPERATURE
- THE ENERGY RECOVERY WHEEL SHALL TURN ON TO FULL SPEED AND THE ENERGY RECOVERY WHEEL BYPASS DAMPERS SHALL CLOSE WHEN THE TEMPERATURE DIFFERENCE FROM THE RETURN AIR TO THE OUTSIDE AIR IS 5°F (ADJ.) OR GREATER FOR MORE THAN 20 MINUTES (ADJ.).
- THE COOLING/HEATING COIL COMPRESSORS SHALL CONTINUE TO MODULATE TO MAINTAIN SETPOINT.

AT FULL COOLING THE ENERGY RECOVERY WHEEL SHALL BE ROTATING AT FULL SPEED WITH THE BYPASS DAMPERS CLOSED AND THE COOLING/HEATING COIL COMPRESSORS ARE IN COOLING MODE WITH THE DIGITAL SCROLL COMPRESSORS MODUATING TO MAINTAIN SETPOINT. WHENEVER THE DISCHARGE AIR TEMPERATURE IS BELOW SETPOINT THE FOLLOWING SHALL OCCUR:
- THE COOLING/HEATING COIL COMPRESSORS OPERATING IN COOLING MODE SHALL CONTINUE TO MODULATE TO MAINTAIN SETPOINT.
- THE ENERGY RECOVERY WHEEL SHALL BE DISABLED AND THE ENERGY RECOVERY WHEEL BYPASS DAMPERS SHALL OPEN WHEN THE TEMPERATURE DIFFERENCE FROM THE RETURN AIR AND OUTSIDE AIR IS 5°F (ADJ.) OR LESS.
- THE ECONOMIZER OPERATION SHALL BE ENABLED WHEN THE OUTSIDE AIR DRY BULB TEMPERATURE IS LESS THAN THE RETURN AIR TEMPERATURE. IN ECONOMIZER MODE THE FMCS SHALL MODULATE THE RETURN AND RELIEF DAMPERS AS REQUIRED TO MAINTAIN DISCHARGE AIR TEMPERATURE SETPOINT.
- THE COOLING COIL CONDENSERS SHALL MODULATE OFF. THE ECONOMIZER OPERATION SHALL CONTINUE TO MAINTAIN SETPOINT. THE COOLING/HEATING COIL CONDENSERS SHALL BE DISABLED BELOW 50ºF (ADJ.)
- IF THE SETPOINT CANNOT BE MAINTAINED BY ECONOMIZER OPERATION THE ENERGY RECOVERY WHEEL SHALL BE ENABLED AND THE BYPASS DAMPERS SHALL CLOSE.
- THE ENERGY RECOVERY WHEEL SHALL MODULATE SPEED OF WHEEL TO MAINTAIN SETPOINT.

PRIMARY COOLING/HEATING COIL OPERATION:
FMCS SHALL STAGE ON COMPRESSORS AND SELECT HEATING/COOLING MODE. FMCS SHALL STAGE COMPRESSORS AND MODULATE DIGITAL SCROLL COMPRESSOR CIRCUITS AS REQUIRED TO MAINTAIN DISCHARGE AIR TEMPERATURE SET POINT. COORDINATE WITH HEATPUMP UNIT MANUFACTURER TO MAINTAIN MINIMUM RUNTIMES OF COMPRESSORS TO PREVENT SHORT CIRCUITING OF SYSTEM.

WHEN IN ECONOMIZER MODE, FMCS SHALL NOT STAGE ON COMPRESSORS UNLESS RETURN AIR DAMPER IS LESS THAN 5% (ADJ.) OPEN AND RELIEF AIR DAMPER IS GREATER THAN 95% (ADJ.) OPEN.

DISCHARGE AIR TEMPERATURE RESET:
RESET DISCHARGE AIR TEMPERATURE BASED ON THE ZONE WITH THE GREATEST CALL FOR COOLING. RESET THE TEMPERATURE AS FOLLOWS:
- WHEN WORST CASE TAB IS LESS THAN 95% (ADJ.) OPEN FOR TEN MINUTES (ADJ.) THEN THE DISCHARGE AIR TEMPERATURE SHALL INCREASE BY 1ºF (ADJ.). THIS SHALL CONTINUE UNTIL AHU MAXIMUM DISCHARGE AIR TEMPERATURE OF 60ºF (ADJ.) IS ACHIEVED.
- WHEN WORST CASE TAB IS MORE THAN 95% OPEN FOR TEN MINUTES (ADJ.) THEN THE DISCHARGE AIR TEMPERATURE SHALL DROP BY 1ºF (ADJ.). THIS SHALL CONTINUE UNTIL AHU MINIMUM DISCHARGE AIR TEMPERATURE OF 55ºF (ADJ.) IS ACHIEVED.
- THE MAXIMUM ALLOWABLE RETURN AIR HUMIDITY SETPOINT SHALL BE 60% (ADJ.). IF RETURN AIR HUMIDITY IS GREATER THAN SETPOINT, RESET DISCHARGE AIR TEMPERATURE TO 55°F UNTIL RETURN AIR HUMIDITY IS 5% LESS THAN MAXIMUM SETPOINT FOR 10 MINUTES (ADJ.).

STATIC PRESSURE AND DISCHARGE AIR TEMPERATURE RESET PRIORITY:
RESET THE DISCHARGE AIR TEMPERATURE PRIOR TO RESETTING THE DUCTWORK STATIC PRESSURE SETPOINT. ONCE THE MAXIMUM SUPPLY TEMPERATURE IS REACHED THEN THE SYSTEM SHALL ENABLE THE STATIC PRESSURE RESET.

VENTILATION AIR CONTROL:
WHENEVER THE AIR HANDLING UNIT IS IN OCCUPIED MODE, THE OUTSIDE AIR DAMPER AND EXHAUST AIR DAMPER SHALL BE FULLY OPEN. THE RETURN AIR AND RELIEF AIR DAMPER SHALL MODULATE IN OPPOSITION TO MAINTAIN THE MINIMUM OUTSIDE AIR FLOW RATE OF 1850 CFM (ADJ.), OR TO SATISFY THE ECONOMIZER DISCHARGE AIR SEQUENCE.

WHEN EF-2 IS ENABLED AS DETECTED BY THE CONNECTION WITH THE KITCHEN HOOD CONTROLLER THE VENTILATION RATE SHALL BE INCREASED BY EXHAUST FAN AIRFLOW RATE BASED ON A CHARACTERISTATION OF THE FAN SPEED AS DETERMINED BY THE BALANCING CONTRACTOR.

ECONOMIZER OPERATION:
WHEN THE OUTSIDE AIR DRY BULB TEMPERATURE IS LESS THAN THE RETURN AIR DRY BULB TEMPERATURE THE FMCS SHALL ENABLE ECONOMIZER CONTROLS. WHEN OUTSIDE AIR DRY BULB TEMPERATURE IS GREATER THAN THE RETURN AIR DRY BULB TEMPERATURE FOR 10 MINUTES THE FMCS SHALL DISABLE ECONOMIZER CONTROLS AND SHALL RETURN THE UNIT TO MINIMUM OUTSIDE AIR MODE. ONCE ECONOMIZER CONTROLS HAVE BEEN ENABLED OR DISABLED, THE UNIT SHALL CONTINUE TO OPERATE IN THAT MODE FOR A MINIMUM OF 10 MINUTES (ADJ.) BEFORE BEING ALLOWED TO SWITCH BACK (TO PREVENT SHORT CYCLING).

IN ECONOMIZER MODE THE FMCS SHALL MODULATE THE RETURN AND RELIEF DAMPERS IN OPPOSITION AS REQUIRED TO MAINTAIN DISCHARGE AIR TEMPERATURE SETPOINT.

ENERGY RECOVERY WHEEL CONTROL:
DEFROST CONTROL: OVERRIDE THE HEATING WHEEL SPEED CONTROL TO LIMIT THE LEAVING EXHAUST AIR TEMPERATURE FROM THE WHEEL TO 15°F (ADJ.) AT A RETURN AIR RELATIVE HUMIDITY OF 30% RH AND RESET TO 5°F (ADJ.) AT 20% RH.

PURGE CONTROL: WHEN THE HEAT WHEEL IS DEACTIVATED, THE WHEEL SHALL RUN FOR 20 SECONDS AT MINIMUM SPEED EVERY 30 MINUTES TO KEEP THE ROTOR SURFACE CLEAN. BYPASS DAMPERS SHALL REMAIN OPEN DURING PURGE SEQUENCE.

BYPASS DAMPERS: WHENEVER THE ENERGY RECOVERY WHEEL IS DISABLED FOR 5 MINUTES (ADJ.) THE BYPASS DAMPERS SHALL OPEN. WHEN ENERGY RECOVERY WHEEL IS ACTIVATED THE BYPASS DAMPERS SHALL CLOSE.

ALARMS, INTERLOCKS, AND SAFETIES:
WHEN FIRE ALARM CONTROL PANEL INDICATES AN ALARM CONDITION, AHU SHALL BE SHUTDOWN.

THE FOLLOWING CONDITIONS SHALL SHUTDOWN THE AHU AND SHALL INDICATE AN ALARM CONDITION AT THE FMCS WORKSTATION:
- LOW STATIC PRESSURE SWITCH INDICATES OUTSIDE DUCT PRESSURE LESS THAN THE SPECIFIED DUCT PRESSURE CLASS.
- LOW STATIC PRESSURE SWITCH INDICATES EXHAUST DUCT PRESSURE LESS THAN THE SPECIFIED DUCT PRESSURE CLASS.
- LOW STATIC PRESSURE SWITCH INDICATES MIXED AIR PRESSURE LESS THAN THE SPECIFIED DUCT PRESSURE CLASS OF THE OUTSIDE AIR DUCTWORK.
- HIGH STATIC PRESSURE SWITCH INDICATES SUPPLY DUCT STATIC PRESSURE GREATER THAN THE SPECIFIED DUCT PRESSURE CLASS.
- SHOULD ANY ONE FOOT SECTION OF THE MANUAL RESET LOW LIMIT TEMPERATURE SWITCH SENSE AIR TEMPERATURE <34°F (ADJ.).

THE FOLLOWING CONDITIONS SHALL INDICATE AN ALARM AT THE FMCS, HOWEVER AHU SHALL CONTINUE TO OPERATE:
- AN ALARM IS INDICATED AT ANY SUPPLY FAN VFD, EXHAUST FAN VFD OR RETURN FAN VFD.
- DIFFERENTIAL PRESSURE SWITCH ACROSS OA FILTER BANK (MERV 13) BANK EXCEEDS 0.6 INCHES W.G. (ADJ.)
- DIFFERENTIAL PRESSURE SWITCH ACROSS RA FILTER BANK (MERV 13) BANK EXCEEDS 0.6 INCHES W.G. (ADJ.)
- DIFFERENTIAL PRESSURE SWITCH ACROSS EA FILTER (MERV 8) EXCEEDS 0.6 INCHES W.G. (ADJ.)
- SEND AN ALARM TO THE FMCS OPERATOR INTERFACE IF THE DISCHARGE AIR TEMPERATURE IS MORE THAN 5°F (ADJ.) ABOVE OR BELOW SETPOINT.
- THE HEAT WHEEL COMES WITH FACTORY EQUIPPED WITH A PROXIMITY SWITCH THAT SHALL PROVIDE A DRY CONTACT IN PUT TO THE DDC SYSTEM. IF THE WHEEL IS INDEXED TO RUN AND TWO SWITCH CLOSURES ARE NOT SEEN WITH 10 MINUTES, AN ALARM WILL BE SENT THROUGH THE DDC SYSTEM SIGNALING A WHEEL ROTATION FAILURE.

IN THE EVENT SUPPLY FAN IS NOT RUNNING (AS INDICATED BY THE CURRENT SENSING RELAYS) RETURN AIR FAN SHALL BE DE-ENERGIZED.

WHENEVER AHU IS SHUTDOWN THE FOLLOWING SHALL OCCUR:
- SUPPLY FAN AND RETURN FAN VFDS SHALL BE DE-ENERGIZED.
- EXHAUST FAN VFDS SHALL BE DE-ENERGIZED.
- THE OUTSIDE AIR DAMPER AND RELIEF AIR DAMPER SHALL FULLY CLOSE.
- RETURN AIR DAMPER SHALL FULLY OPEN.
- ENERGY RECOVERY WHEEL SHALL STOP AND BYPASS DAMPERS SHALL CLOSE.

GRAPHICAL DISPLAY:
DISPLAY THE GLOBAL OA TEMPERATURE AND HUMIDITY ON AHU GRAPHIC PAGE.

1 **AIR HANDLING UNIT CONTROL - AHU-1**
NO SCALE

OPN ARCHITECTS
301 N BROOM STREET #100
MADISON, WI 53703
608-819-0260 PHONE
www.opnarchitects.com
opn@opnarchitects.com

All reports, plans, specifications, computer files, field data, notes and other documents and instruments prepared by OPN Architects, Inc. as instruments of service shall remain the property of OPN Architects, Inc. OPN Architects, Inc. shall retain all common law, statutory and other reserved rights, including the copyright thereto.

© 2017 OPN Architects, Inc.

Owner
City of Madison Fire Department
314 W. Dayton St.
Madison, WI 53703

Project
Madison Fire Station 14
3201 Dairy Drive
Madison, WI 53718

Civil Engineer
Snyder & Associates, Inc
5010 Voges Rd
Madison WI, 53718
P. 608-838-0444

Structural Engineer
IMEG
1800 Deming Way #200
Middleton, WI 53562
P. 608-223-9600

Mechanical Engineer
IMEG
1800 Deming Way #200
Middleton, WI 53562
P. 608-223-9600

Electrical Engineer
IMEG
1800 Deming Way #200
Middleton, WI 53562
P. 608-223-9600

Key Plan

Sheet Issue Date	
BID DOCUMENTS	11/03/17

Revision	Date

IMEG
1800 DEMING WAY, SUITE 200
MIDDLETON, WI 53562
608.223.9600 FAX: 608.836.0415
www.imegcorp.com
PROJECT # 17001140.00

IMEG CORP RESERVES PROPRIETARY RIGHTS, INCLUDING COPYRIGHTS, TO THIS DRAWING AND THE DATA SHOWN THEREON. SAID DRAWING AND/OR DATA ARE THE EXCLUSIVE PROPERTY OF IMEG CORP AND SHALL NOT BE USED OR REPRODUCED FOR ANY OTHER PROJECT WITHOUT THE EXPRESS WRITTEN APPROVAL AND PARTICIPATION OF IMEG CORP. © 2017 IMEG CORP.

REFERENCE SCALE IN INCHES
0 1 2 3

Drawing
CONTROL DIAGRAMS - MECHANICAL

City of Madison Contract No. **8027**
OPN Project No. **17207000**

M452

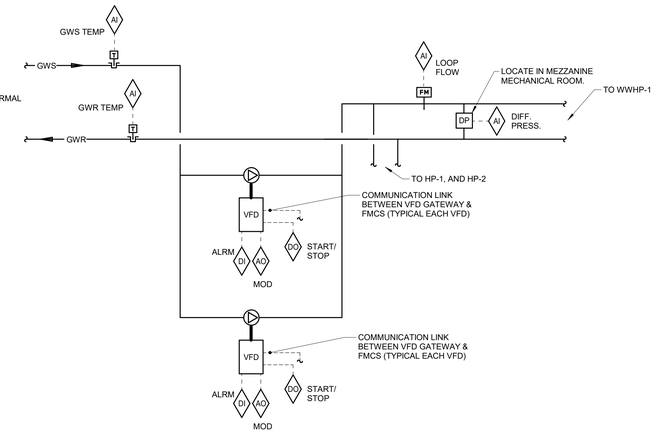

GEOTHERMAL LOOP CONTROL SEQUENCE OF OPERATION:

LOOP CIRCULATING PUMP SHALL BE STARTED AND STOPPED THROUGH A HAND-OFF-AUTO SWITCH ON THE FACE OF THE VFD. WHEN PLACED IN THE HAND POSITION THE PUMP SHALL RUN CONTINUOUSLY. WHEN PLACED IN THE AUTO POSITION THE FMCS SHALL CONTROL PUMP OPERATION. WHEN PLACED IN THE OFF POSITION THE PUMP MOTOR SHALL BE DE-ENERGIZED.

THE LEAD PUMP SHALL RUN WHENEVER ANY OF THE FOLLOWING ARE ENABLED: HP-1, HP-2, WWHP-1. FMCS SHALL AUTOMATICALLY SWITCH THE LEAD AND LAG PUMP ON A WEEKLY BASIS TO EQUALIZE RUN TIME.

LOOP PUMP CONTROL:
ONLY ONE HEATING WATER PUMP SHALL RUN AT TIME. THE SECOND HEATING WATER PUMP IS FULLY REDUNDANT. FMCS SHALL AUTOMATICALLY ROTATE THE LEAD HEATING WATER PUMP ONCE/WEEK (10:00 AM EACH TUESDAY, ADJ.) TO EQUALIZE RUN TIME BETWEEN PUMPS. PROVIDE GRAPHICAL BUTTON ON OPERATOR WORKSTATION GRAPHICAL SCREEN TO ALLOW FMCS OPERATOR TO SWITCH LEAD PUMP TO NEXT ROTATION IN THE EVENT THE CURRENT LEAD PUMP REQUIRES MAINTENANCE.

FMCS SHALL MODULATE SIGNAL TO LEAD PUMP VFD AS REQUIRED TO MAINTAIN HEATING WATER DIFFERENTIAL PRESSURE (DP) SETPOINT IN ADDITION TO MAINTAINING MINIMUM FLOW THROUGH THE WWHP-1 AS REQUIRED PER MANUFACTURER REQUIREMENTS. FMCS SHALL RESET GEOTHERMAL LOOP WATER DIFFERENTIAL PRESSURE (DP) SETPOINT AS REQUIRED TO MAINTAIN AT LEAST 10 PSI (ADJ.) PRESSURE AT PRESSURE SENSOR.

FINAL DIFFERENTIAL PRESSURE SETPOINT SHALL BE DETERMINED BY THE BALANCING CONTRACTOR.

ALARMS, INTERLOCKS & SAFETIES:
AN ALARM SHALL BE INDICATED TO THE FMCS OPERATOR WORKSTATION IN THE EVENT ANY OF THE FOLLOWING OCCUR:
- AN ALARM IS INDICATED AT ANY VFD.

1 GEOTHERMAL LOOP CONTROL
NO SCALE

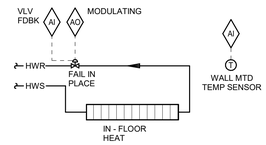

SEQUENCE OF OPERATION:

WHEN THE OUTDOOR AIR TEMPERATURE IS ABOVE 60°F (ADJ.), CONTROL VALVE SHALL BE FULLY CLOSED.

WHEN THE OUTDOOR AIR TEMPERATURE IS BELOW 60°F (ADJ.), THE FMCS SHALL MODULATE THE IN - FLOOR HEAT CONTROL VALVE TO MAINTAIN A SPACE TEMPERATURE SETPOINT OF 60°F (ADJ.). SLAB TEMPERATURE SHALL BE LIMITED FROM EXCEEDING 90°F (ADJ.).

ALARMS, INTERLOCKS & SAFETIES:

SEND AN ALARM TO THE FMCS OPERATOR INTERFACE IF THE SPACE TEMPERATURE FALLS 10°F (ADJ.) BELOW SETPOINT.

2 WATER ROOM CONTROL
NO SCALE

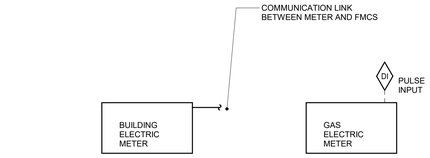

ALARMS, INTERLOCKS & SAFETIES:

- FMCS SHALL MONITOR THE BUILDING NATURAL GAS METER PROVIDED BY MGE UTILITY. REFER TO PLUMBING PLANS FOR LOCATION OF GAS METER. FMCS SHALL MONITOR AND TOTALIZE EACH METER TO PROVIDE THE DAILY, WEEKLY, MONTHLY, AND YEARLY GAS CONSUMPTION.
- FMCS SHALL MONITOR BUILIDNG DISTRIBUTION PANEL ELECTRIC METER PROVIDED BY E.C. FMCS SHALL MONITOR AND TOTALIZE EACH METER TO PROVIDE THE DAILY, WEEKLY, MONTHLY, AND YEARLY ELECTIRC CONSUMPTION.

3 BUILDING UTILITY MONITORING
NO SCALE

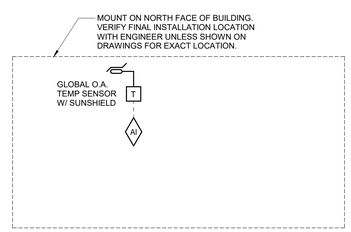

SEQUENCE OF OPERATION:
PROVIDE GLOBAL O.A. DRY-BULB TEMPERATURE.

GLOBAL SENSORS SHALL CONTINUOUSLY UPDATE FMCS FOR USE IN CONTROLLING MECHANICAL EQUIPMENT AS REQUIRED IN SEQUENCES OF OPERATION.

4 GLOBAL REFERENCE POINTS
NO SCALE

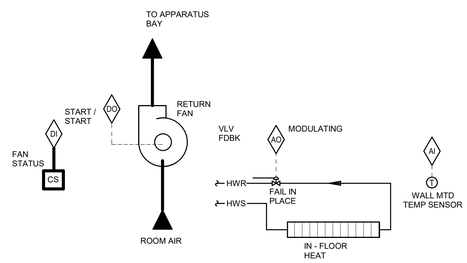

SEQUENCE OF OPERATION:

WHEN THE OUTDOOR AIR TEMPERATURE IS ABOVE 55°F (ADJ.), CONTROL VALVE SHALL BE FULLY CLOSED.

WHEN THE OUTDOOR AIR TEMPERATURE IS BELOW 60°F (ADJ.), THE FMCS SHALL MODULATE THE IN - FLOOR HEAT CONTROL VALVE TO MAINTAIN A SPACE TEMPERATURE SETPOINT OF 60°F (ADJ.). MAXIMUM TEMPERATURE OF IN-FLOOR HEAT SLAB SHALL BE LIMITED FROM EXCEEDING 90°F (ADJ.).

WHEN TEMPERATURE IS 4°F (ADJ.) ABOVE APPARATUS BAY AND ABOVE SPACE SETPOINT OF 80°F (ADJ.) THE RETURN FAN SHALL BE ENERGIZED UNTIL SETPOINT IS MAINTAINED TO MAINTAIN COOLING TO THE SPACE.

ALARMS, INTERLOCKS & SAFETIES:

SEND AN ALARM TO THE FMCS OPERATOR INTERFACE IF THE SPACE TEMPERATURE FALLS 10°F (ADJ.) BELOW SETPOINT.

SEND AN ALARM TO OPERATOR INTERFACE IF RETURN FAN FAILS TO START AS DETECTED BY CURRENT SENSOR.

5 ELECTRICAL ROOM CONTROL
NO SCALE

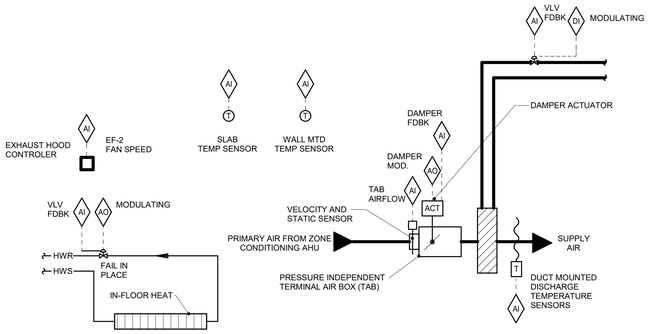

SEQUENCE OF OPERATION:

- FMCS TAB CONTROLLER SHALL MODULATE THE TAB DAMPER AND IN-FLOOR CONTROL VALVE TO MAINTAIN A OCCUPIED SPACE TEMPERATURE OF 70°F (ADJ.) IN HEATING MODE AND 74°F(ADJ.) IN COOLING MODE BASED ON A SIGNAL FROM A WALL MOUNTED TEMPERATURE SENSOR. SEE DRAWINGS FOR TEMPERATURE SENSOR REQUIREMENTS. SPACES WITH ADJUSTABLE THERMOSTATS WILL ALLOW A +/- 3°F (ADJ.) OFFSET FROM THE DDC SETPOINT.
- AT FULL COOLING, THE TAB SHALL BE OPEN TO MAXIMUM CFM POSITION. THE IN-FLOOR RADIATION CONTROL VALVE SHALL BE CLOSED.
- UPON A FALL IN SPACE TEMPERATURE, THE TAB SHALL MODULATE CLOSED UNTIL SPACE SETPOINT IS MAINTAINED, OR UNTIL IT REACHES ITS MINIMUM SCHEDULED CFM POSITION PER THE TAB SCHEDULE. THE IN-FLOOR HEAT CONTROL VALVE SHALL BE CLOSED.
- AS SPACE TEMP DROPS BELOW SETPOINT AND TAB DAMPER IS AT MINIMUM SCHEDULED CFM, TAB CONTROLLER SHALL MODULATE THE IN-FLOOR CONTROL VALVE OPEN AND MODULATE THE REHEAT COIL CONTROL VALVE AS REQUIRED TO MAINTAIN SPACE TEMP. MAXIMUM TEMPERATURE OF IN-FLOOR HEAT SLAB SHALL BE LIMITED FROM EXCEEDING 88°F (ADJ.). A SEPERATE PID LOOP SHALL BE USED FOR CONTROL OF VALVE OPERATION VERSUS DAMPER OPERATION.
- THE FMCS SHALL UTILIZE OUTPUT FROM ALL TERMINAL AIR BOX POSITIONS TO RESET THE SUPPLY DUCT DIFFERENTIAL STATIC PRESSURE.
- EXHUAST FAN SERVING KITCHEN EXHAUST HOOD CONTROLLED BY KITCHEN HOOD CONTROLLER. REFER TO 23 37 00 FOR ADDITIONAL INFORMATION. CONTROL CONTRACTOR SHALL ROUTE LOW VOLTAGE WIRING AS REQUIRED FOR CONTROL OF EXHAUST FAN BETWEEN KITCHEN HOOD CONTROLLER AND EXHAUST FAN ECM CONTROLLER.
- FMCS SHALL MONITOR SIGNAL TO EXHAUST FAN TO MONITOR EF-2 FAN OPERATION AND SPEED.
- TAB BOX MINIMUM SHALL BE RESET TO 450 CFM PLUS EF-2 AIRFLOW AS DETERMINED BY THE FAN SPEED FAN CURVE CHARACTERIATION.

ALARMS, INTERLOCKS & SAFETIES:

SEND AN ALARM TO THE FMCS OPERATOR INTERFACE IF THE SPACE TEMPERATURE IS MORE THAN 10°F (ADJ.) ABOVE OR BELOW SETPOINT.

8 TAB CONTROL GREAT ROOM
NO SCALE

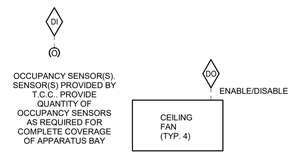

CONTROL SEQUENCE:

CEILING FANS HAVE LOCAL WALL MOUNTED CONTROL FOR FAN SPEED AND ON/OFF CONTROL.

PROVIDE OCCUPANCY SENSORS IN APPARATUS BAY FOR FMCS OVERRIDE OF CEILING FAN OPERATION AS DESCRIBED BELOW.

FMCS SHALL HAVE A DIGITAL OUTPUT TO OVERRIDE THE LOCAL CONTROL TO DISABLE OR ENABLE THE FAN OPERATION. FAN SPEED WILL STILL BE CONTROLLED LOCALLY.

FMCS SHALL ENABLE CEILING FAN IF OUTSIDE AIR TEMPERATURES DROP BELOW 40°F (ADJ.) TO MINIMIZE STRATIFICATION WITHIN THE SPACE. IF OUTSIDE AIR TEMPERATURE RISES ABOVE 45°F(ADJ) THAN CEILING FAN SHALL BE DISABLED UNLESS THE APPARATUS BAY IS OCCUPIED AS DETECTED BY SPACE OCCUPANCY SENSORS. IF SPACE IS OCCUPIED THEN CEILING FANS SHALL BE ENABLED REGARDLESS OF SPACE TEMPERATURE.

9 CEILING FAN CONTROL
NO SCALE

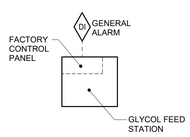

SEQUENCE OF OPERATION:

THE GLYCOL FEED SYSTEM CONTROLLER SHALL OPERATE THE SYSTEM TO MAINTAIN THE SPECIFIED PRESSURE IN THE WATER SYSTEM.

ALARMS, INTERLOCKS, AND SAFETIES:

AN ALARM SHALL BE GENERATED AT THE FMCS OPERATOR INTERFACE IF THE GLYCOL CONTROLLER INDICATES AN ALARM.

6 GLYCOL FEED STATION CONTROL DIAGRAM
NO SCALE

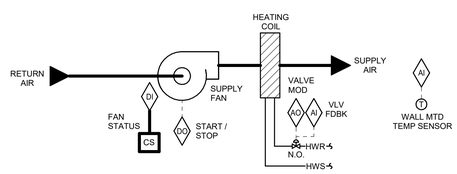

SEQUENCE OF OPERATION:

THE CABINET HEATER SHALL BE FURNISHED WITH A UNIT MOUNTED FAN SPEED SELECTOR SWITCH (OFF-HIGH-MED-LOW). THE UNIT SHALL MAINTAIN A SPACE TEMPERATURE OF NO MORE THAN 60°F **BY CYCLING THE FAN AND MODULATING THE CONTROL VALVE.**

ALARMS, INTERLOCKS & SAFETIES:

- SEND AN ALARM TO THE FMCS OPERATOR INTERFACE IF SPACE TEMPERATURE FALLS 10°F (ADJ.) BELOW SETPOINT.

7 CABINET HEATER CONTROL - HYDRONIC
NO SCALE

OPN ARCHITECTS
301 N BROOM STREET #100
MADISON, WI 53703
608-819-0260 PHONE
www.opnarchitects.com
opn@opnarchitects.com

All reports, plans, specifications, computer files, field data, notes and other documents and instruments prepared by OPN Architects, Inc. as instruments of service shall remain the property of OPN Architects, Inc. OPN Architects, Inc. shall retain all common law, statutory and other reserved rights, including the copyright thereto.

© 2017 OPN Architects, Inc.

Owner
City of Madison Fire Department
314 W. Dayton St.
Madison, WI 53703

Project
Madison Fire Station 14
3201 Dairy Drive
Madison, WI 53718

Civil Engineer
Snyder & Associates, Inc
5010 Voges Rd
Madison WI, 53718
P. 608-838-0444

Structural Engineer
IMEG
1800 Deming Way #200
Middleton, WI 53562
P. 608-223-9600

Mechanical Engineer
IMEG
1800 Deming Way #200
Middleton, WI 53562
P. 608-223-9600

Electrical Engineer
IMEG
1800 Deming Way #200
Middleton, WI 53562
P. 608-223-9600

Key Plan

Sheet Issue Date	
BID DOCUMENTS	11/03/17

Revision	Date

Drawing
CONTROL DIAGRAMS - MECHANICAL

City of Madison Contract No. **8027**
OPN Project No. **17207000**

M453

IMEG
1800 DEMING WAY, SUITE 200
MIDDLETON, WI 53562
608.223.9600 FAX: 608.836.0415
www.imegcorp.com
PROJECT # 17001140.00

IMEG CORP RESERVES PROPRIETARY RIGHTS, INCLUDING COPYRIGHTS, TO THIS DRAWING AND THE DATA SHOWN THEREON. SAID DRAWING AND/OR DATA ARE THE EXCLUSIVE PROPERTY OF IMEG CORP AND SHALL NOT BE USED OR REPRODUCED FOR ANY OTHER PROJECT WITHOUT THE EXPRESS WRITTEN APPROVAL AND PARTICIPATION OF IMEG CORP. © 2017 IMEG CORP.

REFERENCE SCALE IN INCHES
0 1 2 3

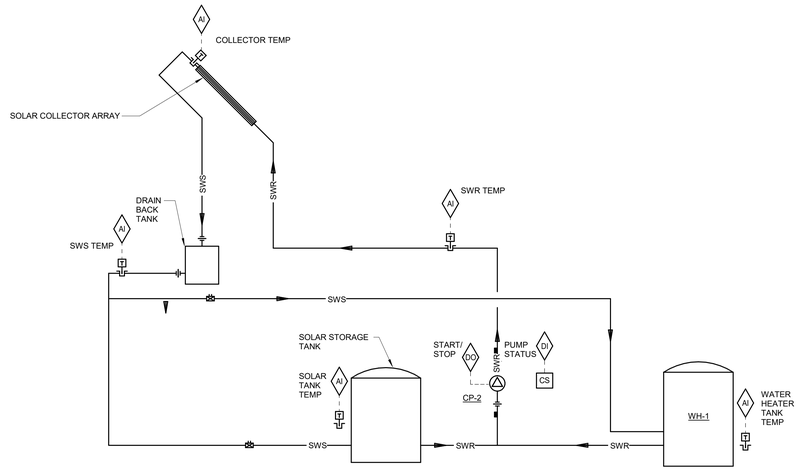

SEQUENCE OF OPERATION:
SOLAR HOT WATER CIRCULTING PUMP

FMCS SHALL ENABLE SOLAR HOT WATER CIRCULTING PUMP (CP-2) TO OPERATE CONTINUOUSLY DURING AVAILABLE SUPPLY OF HOT WATER FROM SOLAR COLLECTOR PANELS AS MEASURED BY DIFFERENTIAL TEMPERATURES BETWEEN SOLAR COLLECTOR PANEL HEADER AND SOLAR STORAGE TANK OR WATER HEATER TEMPERATURE. PUMP SHALL BE ENABLED WHEN THE DIFFERENTIAL TEMPERATURE IS GREATER THAN 15°F (ADJ.) BETWEEN THE COLLECTOR TEMPERATURE AND EITHER THE SOLAR STORAGE TANK TEMPERATURE OR HOT WATER HEATER TANK TEMPERATURE. PUMP SHALL BE DISABLED WHEN DIFFERENTIAL TEMPERATURE IS LESS THAN 5°F (ADJ.) BETWEEN THE COLLECTOR TEMPERATURE AND BOTH THE SOLAR STORAGE TANK TEMPERATURE ANDTHE HOT WATER HEATER TANK TEMPERATURE.

PUMP SHALL BE DISABLED IF THE FOLLOWING HIGH AND LOW LIMTED ARE ACHIEVED.
- COLLECTOR HIGH LIMIT TEMPERATURE EXCEEDS 220°F (ADJ.)
- COLLECTOR LOW LIMIT TEMPERATURE IS BELOW 85°F (ADJ.)
- STORAGE TANK HIGH LIMIT TEMPERATURE EXCEEDS 180°F (ADJ.)
- WATER HEATER HIGH LIMIT TEMPERATURE EXCEEDS 180°F (ADJ.)

FMCS SHALL CALCULATE THE SOLAR COLLECTOR SYSTEM ENERGY BASED ON THE FOLLOWING EQUATIONS AND TOTALIZE THE ENERGY IN BTU SAVED. COORDINATE FINAL CALCULATION OUTPUTS WITH OWNER:
BTU = 500 X (SOLAR WATER SUPPLY TEMPERATURE - SOLAR WATER RETURN TEMPERATURE) X (PUMP FLOW RATE AS DETERMINED BY BALANCING CONTRACTOR BY SUMMING THE TWO BALANCING VALVES IN THE SYSTEM).

ALARMS, INTERLOCKS AND SAFETIES:
AN ALARM SHALL BE GENERATED AT THE FMCS OPERATOR WORKSTATION IN THE FOLLOWING EVENTS:
- THE FMCS COMMANDS THE SOLAR PUMP TO OPERATE AND THE CURRENT SENSING RELAY DETECTS INSUFFICIENT CURRENT DRAW.

WATER HEATER TEMPERATURE FALLS BELOW 100°F (ADJ.)

1 SOLAR SYSTEM CONTROL DIAGRAM
NO SCALE

IMEG
1800 DEMING WAY, SUITE 200
MIDDLETON, WI 53562
608.223.9600 FAX: 608.836.0415
www.imegcorp.com
PROJECT # 17001140.00

IMEG CORP RESERVES PROPRIETARY RIGHTS, INCLUDING COPYRIGHTS, TO THIS DRAWING AND THE DATA SHOWN THEREON. SAID DRAWING AND/OR DATA ARE THE EXCLUSIVE PROPERTY OF IMEG CORP AND SHALL NOT BE USED OR REPRODUCED FOR ANY OTHER PROJECT WITHOUT THE EXPRESS WRITTEN APPROVAL AND PARTICIPATION OF IMEG CORP. © 2017 IMEG CORP.

REFERENCE SCALE IN INCHES
0 1 2 3

OPN ARCHITECTS
301 N BROOM STREET #100
MADISON, WI 53703
608-819-0260 PHONE
www.opnarchitects.com
opn@opnarchitects.com

All reports, plans, specifications, computer files, field data, notes and other documents and instruments prepared by OPN Architects, Inc. as instruments of service shall remain the property of OPN Architects, Inc. OPN Architects, Inc. shall retain all common law, statutory and other reserved rights, including the copyright thereto.

© 2017 OPN Architects, Inc.

Owner
City of Madison Fire Department
314 W. Dayton St.
Madison, WI 53703

Project
Madison Fire Station 14
3201 Dairy Drive
Madison, WI 53718

Civil Engineer
Snyder & Associates, Inc
5010 Voges Rd
Madison WI, 53718
P. 608-838-0444

Structural Engineer
IMEG
1800 Deming Way #200
Middleton, WI 53562
P. 608-223-9600

Mechanical Engineer
IMEG
1800 Deming Way #200
Middleton, WI 53562
P. 608-223-9600

Electrical Engineer
IMEG
1800 Deming Way #200
Middleton, WI 53562
P. 608-223-9600

Key Plan

Sheet Issue Date
BID DOCUMENTS 11/03/17

Revision Date

Drawing
CONTROL DIAGRAMS - MECHANICAL

City of Madison Contract No. **8027**
OPN Project No. **17207000**

M454

AIR HANDLING SCHEDULE

NOTES:
1.PROVIDE SHAFT GROUNDING AS REQUIRED IN THE MOTOR SPECIFICATION 23 05 13.

TAG NAME	AREA SERVED	SUPPLY FAN (NOTE 1) CFM	MIN. CFM	EXT. S.P.	TYPE	RPM (NOTE D)	BHP (NOTE E)	MHP (NOTE E)	DISCONNECT BY (NOTE A)	DISCONNECT TYPE (NOTE B)	CONTROLLER/ STARTER BY (NOTE A)	CONTROLLER/ STARTER TYPE (NOTE C)	RETURN FAN (NOTE 1) CFM	EXT. S.P.	TYPE	RPM (NOTE D)	BHP (NOTE E)	MHP (NOTE E)	DISCONNECT BY (NOTE A)	DISCONNECT TYPE (NOTE B)	CONTROLLER/ STARTER BY (NOTE A)	CONTROLLER/ STARTER TYPE (NOTE C)	EXHAUST FAN (NOTE 1) CFM	MIN CFM	EXT. S.P.	TYPE	RPM (NOTE D)	BHP (NOTE E)	MHP (NOTE E)	DISCONNECT BY (NOTE A)	DISCONNECT TYPE (NOTE B)	CONTROLLER/ STARTER BY (NOTE A)	CONTROLLER/ STARTER TYPE (NOTE B)	MINIMUM OUTSIDE AIR CFM	VOLTAGE	PHASES	DX COOLING/HEATING COIL- COOLING EAT DB °F	EAT WB °F	LAT DB °F	LAT WB °F	TOTAL MBH	MAX. A.P.D. IN. W.C.	SAT SUC °F	REFRIGERANT	CFM	DX COOLIN/HEATING COIL - HEATING EAT DB °F	EAT WB °F	LAT DB °F	LAT WB°F	TOTAL MBH	MAX. A.P.D. IN. W.C.	SAT SUC °F	CFM	REFRIGERANT	DX VENTILATION AIR COOLING COIL EAT DB °F	EAT WB °F	LAT DB °F	LAT WB °F	TOTAL MBH	MAX. A.P.D. IN. W.C.	SAT SUC °F	CFM	MANUFACTURER	MODEL	NOTES
AHU-1	FIRST FLOOR	6000	1850	1.25	PLENUM	1986	5.1	7.5	MC	VFD/B	MC	VFD/B	4400	0.75	PLENUM	1594	1.9	3	MC	VFD/B	MC	VFD/B	1675	1550	75	PLENUM	3082	.95	1.5	MC	VFD/B	MC	VFD/B	2900	208	3	66.3	59.4	52.7	51.0	140	0.4	40.0	R410a	6000	49.4	35.9	70.4	46.7	136	0.35	40	6000	R401A	80.8	69.3	57.2	56.0	125	0.4	49.0	2900	DAIKIN APPLIED	CAH	NOTE 1

AIR HANDLING SCHEDULE CONTD..

FILTER EA FILTER TYPE	EA FILTER FACE VELOCITY	EA FILTER PRESSURE DROP DIRTY	EA FILTER PRESSURE DROP CLEAN	RA FILTER TYPE	RA FILTER FACE VELOCITY	RA FILTER PRESSURE DROP DIRTY	RA FILTER PRESSURE DROP CLEAN	OA FILTER TYPE	OA FILTER FACE VELOCITY	OA FILTER PRESSURE DROP DIRTY	FINAL FILTER PRESSURE DROP CLEAN	MANUFACTURER	MODEL	NOTES
MERV 8	4400	0.6	0.75	MERV 8	260	0.60	0.1	MERV 13	355	0.60	0.22 in-wg	DAIKIN APPLIED	CAH	NOTE 1

ENERGY RECOVERY WHEEL SCHEDULE

NOTES:
1.REFER TO SPECIFICATION 23 72 00 FOR REQUIREMENTS. REFER TO AIR HANDLING UNIT SCHEDULE FOR ADDITIONAL UNIT REQUIREMENTS.

AIR HANDLING UNIT TAG NAME	AREA SERVED	TYPE	WINTER TOTAL EFFECTIVENSS	OUTSIDE/SUPPLY AIR STREAM CFM	SUMMER EAT DB °F	SUMMER EAT WB °F	SUMMER LAT DB °F	SUMMER LAT WB °F	WINTER EAT DB °F	WINTER EAT WB °F	WINTER LAT DB °F	WINTER LAT WB °F	APD	RETURN/EXHAUST AIR STREAM CFM	SUMMER EAT DB °F	SUMMER EAT WB °F	SUMMER LAT DB °F	SUMMER LAT WB °F	WINTER EAT DB °F	WINTER EAT WB °F	WINTER LAT DB °F	WINTER LAT WB °F	APD	RECOVERED SUMMER MBH	RECOVERED WINTER MBH	WHEEL MOTOR HP	ELECTRICAL VOLTAGE	PHASE	DISCONNECT BY (NOTE A)	DISCONNECT TYPE (NOTE B)	CONTROLLER/STARTER BY (NOTE A)	CONTROLLER/STARTER TYPE (NOTE C)	MANUFACTURER	MODEL
AHU-1	FIRST FLOOR	ENTHALPY	93%	2,900	87	75	80.8	69.3	-15	-15	29.1	22.7	0.87	1,550	75	62.5	86.3	73.9	70	48	-9.9	-9.9	0.46	66	150	0.13	115	1	MFR	VFD	MFR	VFD	DAIKIN APPLIED	SXA-1200-MW

WATER TO WATER HEAT PUMP SCHEDULE

NOTES:
1. REFER TO SPECIFICATION SECTION 23 64 17 FOR ADDITIONAL INFORMATION.
2. WATER TO WATER HEATING ONLY UNIT.
3. REFER TO 1/M202 FOR SIZE AND CLEARANCE REQUIREMENTS FOR THE UNIT.
4. UNIT SHALL HAVE BE SELECTED WITH FOULING FACTOR OF 0.0001 ON EVAPORATOR AND CONDENSER HEAT EXCHANGERS.
5. UNIT SHALL HAVE TWO COMPRESSORS WITH DIGITAL SCROLLS OR VARIABLE SPEED COMPRESSORS.
6. UNIT SHALL BE SCCR RATING OF 42000.

TAG NAME	AREA SERVED	REFRIGERANT TYPE	CAPACITY/PERFORMANCE TOTAL MBH	HEATING COP BASED ON WATER CONDITION LISTED	EVAPORATOR PERFORMANCE - 25% PROPYLENE GLYCOL EWT °F	LWT °F	GPM	MAX. PRESS. DROP FT. HEAD	CONDENSER PERFORMANCE EWT °F	LWT °F	GPM	MAX. PRESS. DROP FT. HEAD	ELECTRICAL VOLTAGE	PHASES	FLA	MCA	MOCP	DISCONNECT BY (NOTE A)	DISCONNECT TYPE (NOTE B)	CONTROLLER/ STARTER BY (NOTE A)	CONTROLLER/ STARTER TYPE (NOTE C)	MANUFACTURER	MODEL	NOTE
WWHP-1	BUILDING	R-410A	332.00	3.2	38	30	61.2	9.000	100	120	33.4	5.40	208	3	118.4	148.0	225	EC	-	MFR	FV	MULTISTACK	HS520	NOTES 1, 2, 3, 4, 5, 6

MAKE-UP AIR UNIT SCHEDULE

NOTES:
1. PROVIDE SHAFT GROUNDING AS REQUIRED IN THE MOTOR SPECIFICATION 23 05 13.

TAG NAME	AREA SERVED	MAX. DIMENSIONS LENGTH	WIDTH	HEIGHT	CFM	FAN TYPE	FAN RPM (NOTE D)	EXT. S.P. IN. W.C.	MIN. EFFICIENCY AFUE	MIN. MBH OUTPUT	EAT °F	LAT °F	ELECTRICAL BHP (NOTE E)	MHP (NOTE E)	VOLTAGE	PHASES	DISCONNECT BY (NOTE A)	DISCONNECT TYPE (NOTE B)	CONTROLLER/ STARTER BY (NOTE A)	CONTROLLER/ STARTER TYPE (NOTE C)	FUEL TYPE	FUEL PRESSURE (IN. W.C.)	MANUFACTURER	MODEL	NOTES
MAU-1	APPARATUS BAY	109	44	45	5800	PLENUM	1736	0.75	92	469	-15.0	60.0	3.15	5	208	3	MFR	VFD	MFR	VFD	NG	12	GREENHECK	DGX-P120-H22	NOTE 1

FAN SCHEDULE

NOTES:
1. PROVIDE SHAFT GROUNDING AS REQUIRED IN THE MOTOR SPECIFICATION 23 05 13.
2. FAN SHALL HAVE FINGED VENTED CURB AND FAN SHALL MEET UL762 REQUIREMENTS. UNIT SHALL HAVE ECM TYPE MOTOR WITH 0-10 VDC OUTPUT FROM KITCHEN HOOD CONTROLLER TO CONTROL FAN SPEED AND START/STOP FUNCTION.
3. UNIT SHALL HAVE ECM TYPE MOTOR WITH MANUAL SPEED ADJUSTMENT ON FAN CONTROLLER FOR BALANCING.

TAG NAME	AREA SERVED	CFM	S.P. IN. W.C.	WHEEL DIA. INCHES	FAN RPM (NOTE F)	DRIVE TYPE	MAX. AMCA SONES	BACKDRAFT DAMPER TYPE	CURB TYPE (NOTE G)	ELECTRICAL (NOTE 1) BHP	MHP	VOLTAGE	PHASES	DISCONNECT BY (NOTE A)	DISCONNECT TYPE (NOTE B)	CONTROLLER/ STARTER BY (NOTE A)	CONTROLLER/ STARTER TYPE (NOTE C)	MANUFACTURER	MODEL	NOTES
EF-1	APERATUS BAY	5800	0.25	30	709	DIRECT	10.4	ELECTRIC	N/A	0.51	2	208	3	MFR	VFD	MFR	VFD	GREENHECK	SE2-30-620-B20-VGD	
EF-2	KITCHEN	1050	1.20	14.625	1392	DIRECT	9.9	N/A	MFR	0.4	0.75	115	1	MFR	NF	TCC	FV	GREENHECK	CUE-141-VG	NOTE 2
RF-1	ELECTRICAL 112	1200	0.40	11.187	1651	DIRECT	10.5	N/A	MFR	0.21	0.25	115	1	MFR	NF	TCC	FV	GREENHECK	SQ-100-VG	

RADIANT FLOOR MANIFOLD SCHEDULE

NOTES: REFER TO DRAWINGS M201 AND M403 FOR ADDITIONAL INFORMATION ON SPACE SERVED. REFER TO SPECIFICATION SECTION 23 83 00 FOR ADDITIONAL REQUIREMENTS. MAXIMUM WATER SUPPLY TEMPERATURE AVAILABLE IS 115°F. RADIANT FLOOR MANUFACTURER REQUIRED TO CALCULATE TUBE SPACING, TUBE SIZE, AND FLOW RATES REQUIRED TO MEET SCHEDULED REQUIRED HEAT OUTPUT FOR EACH ZONE.

MANIFOLD NAME	AREA SERVED	# OF LOOPS	TUBING SIZE (IN.)	PRESSUDE DROP (FT. HD)	MAX. MANIFOLD FLOW (GPM)	SUPPLY WATER TEMP	WATER TEMP DIFFERENCE	TUBE SPACING (IN.)	REQUIRED HEAT OUTPUT (MBH)
1	MECH. STOR.	1	3/4"	3.5	1.1	105	20	12	11.2
2	APPARATUS BAY	9	3/4"	10	15.2	107	20	12	151.1
3	APPARATUS BAY	8	3/4"	7.6	10.8	110	20	12	107
4	WATCH	2	5/8"	2.1	1.4	109	20	12	13.8
5	TRAINNING ROOM	4	5/8"	5.8	3.8	114	20	12	37.9
6	LOCKER ROOM	3	5/8"	1.1	1.2	90	20	12	11.6
7	LT OFFICE 123	1	5/8"	1.2	0.5	105	20	12	5.5
8	WORKSHOP	5	5/8"	.6	1.4	85	20	12	13.6
9	LT OFFICE 125/ SHOWER	1	5/8"	2.7	0.8	104	20	12	7.8
10	SMALL MEETING ROOM 102	1	5/8"	2.7	0.6	92	20	12	6
11	SMALL MEETING ROOM 103	1	5/8"	.3	0.4	110	20	12	3.5
12	LT OFFICE	1	5/8"	1.4	0.6	105	20	12	6
13	DORM ROOM	3	5/8"	11.7	1.4	92	20	12	13.6
14	GREAT ROOM	3	5/8"	1.7	3.9	111	20	12	38.8
15	LOBBY/ VEST	2	5/8"	5.6	1.8	102	20	12	17.8
16	STORAGE/ WATER	1	3/4"	1.3	0.7	108	20	12	7.4
17	FITNESS	2	5/8"	2.6	1.5	110	20	12	14.8

COIL SCHEDULE - WATER

TAG NAME	AREA SERVED	SIZE L	SIZE H	CFM	EAT DB °F	EAT WB °F	LAT DB °F	TOTAL MBH	A.P.D. IN. W.C.	EWT °F	LWT °F	GPM	W.P.D. FT. HEAD	MANUFACTURER	MODEL	NOTES
HC-1	GREAT HALL	20	16	1500	55.0	54.0	70.0	24	0.10	115	95	2.4	5.0	TRANE	HTCL	

PUMP SCHEDULE

NOTES:
1.PROVIDE SHAFT GROUNDING AS REQUIRED IN THE MOTOR SPECIFICATION 23 05 13.
2.PUMP SHALL BE SELECTED BASED ON 25% PROPYLENE GLYCOL AND 36° F TEMPERATURE.

TAG NAME	AREA SERVED	GPM	PUMP FT. HEAD AT DESIGN	MINIMUM PUMP EFFICIENCY	INLET SIZE	IMPELLER SIZE	ELECTRICAL (NOTE 1) HP (NOTE E)	RPM	VOLTAGE	PHASES	DISCONNECT BY (NOTE A)	DISCONNECT TYPE (NOTE B)	CONTROLLER/ STARTER BY (NOTE A)	CONTROLLER/ STARTER TYPE (NOTE C)	MANUFACTURER	MODEL	NOTES
P-1	PRIMARY LOOP	65.0	65.00	53.3	1 1/2"	8.375	3	1800	208	3	MC	VFD/B	MC	VFD/B	B & G	e-80	
P-2	PRIMARY LOOP	65.0	65.00	53.3	1 1/2"	8.375	3	1800	208	3	MC	VFD/B	MC	VFD/B	B & G	e-80	
P-3	GEOTHERMAL	110.0	60.00	58.8	2 1/2"	8.000	5	1800	208	3	MC	VFD/B	MC	VFD/B	B & G	e-80	NOTE 2
P-4	GEOTHERMAL	110.0	60.00	58.8	2 1/2"	8.000	5	1800	208	3	MC	VFD/B	MC	VFD/B	B & G	e-80	NOTE 2

BOILER SCHEDULE - HOT WATER

TAG NAME	MAX. DIMENSIONS LENGTH	WIDTH	HEIGHT	FUEL	INLET FUEL PRESSURE (IN. W.C.)	TURNDOWN RATIO	BOILER MINIMUM FLOW (GPM)	INPUT BTUH/HR	EWT °F	LWT °F	OPERATING PRESSURE PSI	ELECTRICAL MOCP	VOLTAGE	PHASES	DISCONNECT BY (NOTE A)	DISCONNECT TYPE (NOTE B)	CONTROLLER/ STARTER BY (NOTE A)	MANUFACTURER	MODEL	NOTES
B-1	30'-1/2"	26'-1/4"	53'-1/2"	NG	14	10:1	10	400000	95	115	160	20	115	1	MFR	F	MFR	LOCHINVAR	FTX400	

HEAT PUMP SCHEDULE - WATER-TO-DIRECT EXPANSION COIL

NOTES:
1.PROVIDE UNIT WITH DIGITAL SCROLL COMPRESSORS.

TAG NAME	AREA SERVED	CONFIGURATION	UNIT NOMINAL TONNAGE	CONDITIONS BASED ON 25% PROPYLENE GLYCOL EWT	LWT	MIN. EER	CONDITIONS BASED ON 25% PROPYLENE GLYCOL EWT	LWT	MIN. COP	COND. GPM	W.P.D. FT. HEAD	ELECTRICAL VOLTAGE	PHASES	FLA	MCA	MOCP	DISCONNECT BY (NOTE A)	DISCONNECT TYPE (NOTE B)	CONTROLLER/ STARTER BY (NOTE A)	MANUFACTURER	MODEL (NOTE 1)	NOTES
HP-1	AHU-1 VENTILATION COIL	WATER SOURCE CONDENSING UNIT	10	90.0	94.3	13.3	0.0	0	0	30.0	9.00	208	3	30.0	38	60	EC	-	MFR	AAON	SB	NOTE 1
HP-2	AHU-1 HEATING/COOLING COIL	WATER SOURCE HEAT PUMP	14	90.0	99.6	10.2	38.0	31.2	2.98	40.0	8.00	208	3	48.0	60	100	EC	-	MFR	AAON	SB	NOTE 1

SCHEDULE GENERAL NOTES:

A. DISCONNECT AND CONTROLLER STARTER FURNISHED AND INSTALLED BY:
MFR = MANUFACTURER
EC = ELECTRICAL CONTRACTOR.
MC = FURNISHED BY MECHANICAL CONTRACTOR, INSTALLED BY ELECTRICAL CONTRACTOR.
MFR/EC = FURNISHED LOOSE BY MANUFACTURER INSTALLED BY ELECTRICAL CONTRACTOR....

B. DISCONNECT TYPE:
F = FUSED
NF = NON-FUSED

C. CONTROLLER STARTER TYPE:
FV = FULL VOLTAGE
WYE = WYE-DELTA
SS = SOLID STATE (SOFT START)
MS = MANUAL STARTER
VFD = VARIABLE FREQUENCY DRIVE
VFD/B = VARIABLE FREQUENCY DRIVE WITH BYPASS

D. FAN RPM SHALL NOT EXCEED 110% OF SCHEDULED VALUE, WITH THE SCHEDULED WHEEL TYPE. SUBSTITUTION OF BI OR BIA FANS FANS FOR FC IS ACCEPTABLE IF EFFICIENCY IS NOT LOWER.

E. NO EQUIPMENT SHALL BE SELECTED ABOVE 90% OF MOTOR NAME PLATE RATING.

F. MUST BE WITHIN +/- 10% OF SCHEDULED RPM.

G. CURB TYPE:
MFR = STANDARD CURB BY MANUFACTURER
GC = BY GENERAL CONTRACTOR
SAC = SOUND ATTENUATOR CURB

OPN ARCHITECTS
301 N BROOM STREET #100
MADISON, WI 53703
608-819-0260 PHONE
www.opnarchitects.com
opn@opnarchitects.com

All reports, plans, specifications, computer files, field data, notes and other documents and instruments prepared by OPN Architects, Inc. as instruments of service shall remain the property of OPN Architects, Inc. OPN Architects, Inc. shall retain all common law, statutory and other reserved rights, including the copyright thereto.

© 2017 OPN Architects, Inc.

Owner
City of Madison Fire Department
314 W. Dayton St.
Madison, WI 53703

Project
Madison Fire Station 14
3201 Dairy Drive
Madison, WI 53718

Civil Engineer
Snyder & Associates, Inc
5010 Voges Rd
Madison WI, 53718
P. 608-838-0444

Structural Engineer
IMEG
1800 Deming Way #200
Middleton, WI 53562
P. 608-223-9600

Mechanical Engineer
IMEG
1800 Deming Way #200
Middleton, WI 53562
P. 608-223-9600

Electrical Engineer
IMEG
1800 Deming Way #200
Middleton, WI 53562
P. 608-223-9600

Key Plan

Sheet Issue Date
BID DOCUMENTS 11/03/17

Revision Date

Drawing
SCHEDULES - MECHANICAL

City of Madison Contract No. **8027**
OPN Project No. **17207000**

M500

IMEG
1800 DEMING WAY, SUITE 200
MIDDLETON, WI 53562
608.223.9600 FAX: 608.836.0415
www.imegcorp.com
PROJECT # 170011A0.00

IMEG CORP. RESERVES PROPRIETARY RIGHTS, INCLUDING COPYRIGHTS, TO THIS DRAWING AND THE DATA SHOWN THEREON. SAID DRAWING AND/OR DATA ARE THE EXCLUSIVE PROPERTY OF IMEG CORP AND SHALL NOT BE USED OR REPRODUCED FOR ANY OTHER PROJECT WITHOUT THE EXPRESS WRITTEN APPROVAL AND PARTICIPATION OF IMEG CORP. © 2017 IMEG CORP.

REFERENCE SCALE IN INCHES
0 1 2 3

CABINET HEATER SCHEDULE - HOT WATER

NOTES:
1.COORDINATE COLOR SELECTION WITH ARCHITECT.

TAG NAME	AREA SERVED	CONFIGURATION	NOMINAL CFM	MBH	GPM	EWT °F	LWT °F	MAX W.P.D. FT. HD	CABINET (NOTE 1) HEIGHT	WIDTH	DEPTH	ELECTRICAL FAN HP	VOLTAGE	PHASES	DISCONNECT BY (NOTE A)	DISCONNECT TYPE (NOTE B)	CONTROLLE R/ STARTER BY (NOTE A)	MANUFACTURER	MODEL	NOTES
CAB-1	VESTIBULE 100	IN-WALL	250	6.6	2.0	120	20	0.90	23"	16"	5"	0.1	120	1	MFR	NF	TCC	KING	HME	

UNIT HEATER SCHEDULE - HOT WATER

NOTES:
1.REFER TO CONTROL DRAWINGS FOR DESCRIPTION OF CONTROL TYPE.

TAG NAME	AREA SERVED	CONFIGURATION	CFM	MBH	GPM	PIPE CONNECTION SIZE	EWT °F	LWT °F	W.P.D. FT. HEAD	ELECTRICAL HP	RPM	VOLTAGE	PHASES	DISCONNECT BY (NOTE A)	DISCONNECT TYPE (NOTE B)	CONTROLLER/ STARTER BY (NOTE A)	MANUFACTURER	MODEL	NOTES
UH-1	APPARTUS BAY	HORIZONTAL	5130	96.4	9.6	2"	115	95	0.4	0.50	1100	120	1	MFR	NF	MFR	RITTLING	RH-340	NOTE 1

TERMINAL AIR BOX SCHEDULE - SINGLE DUCT

NOTES:
1.NEITHER RADIATED NOR DISCHARGE SOUND LEVELS SHALL EXCEED NC 35 AT 1.5" INLET STATIC PRESSURE WHEN TESTED PER AHRI STANDARD 885-2008 USING 5/8" 20-LB DENSITY MINERAL FIBER CEILING TILE.
2.PROVIDE UNIT WITH FLANGED CONNECTIONS AND MANUFACTURER SUPPLIED INSULATION.
3.SEE SPECIFICATION SECTION 23 09 00 FOR DESCRIPTION OF CONTROL TYPE.
4.SENSOR TYPES: 1 - SENSOR ONLY, 2 - SENSOR WITH ADJUSTMENT, 3 - SENSOR WITH OVERRIDE, 4 - SENSOR WITH ADJUSTMENT AND OVERRIDE.

TAG NAME	AREA SERVED	CFM COOLING MAX.	CFM MIN.	MIN. INLET SIZE (IN.) DIA.	MAX PRESSURE DROP (IN W.C)	CONTROL TYPE (NOTE 3)	SENSOR TYPE (NOTE 4)	MANUFACTURER	MODEL (NOTES 1, 2)	NOTES
TAB-101	LOBBY 101, CORRIDOR 104	460	200	10"	0.15"	2/M450	1	ACCUTROL	H-AV3100	NOTES 1,2
TAB-102	SMALL MEETING 102	200	80	8"	.15	3/M450	1	ACCUTROL	H-AV3100	NOTES 1,2
TAB-103	SMALL MEETING 103	100	80	6"	.15	3/M450	1	ACCUTROL	H-AV3100	NOTES 1,2
TAB-108	LIEUTENANT'S OFFICE 108	280	80	8"	.15	3/M450	2	ACCUTROL	H-AV3100	NOTES 1,2
TAB-109	WATCH 109	600	100	10"	.15	2/M450	2	ACCUTROL	H-AV3100	NOTES 1,2
TAB-118	CORRIDOR 118	200	200	8"	.15	2/M450	1	ACCUTROL	H-AV3100	NOTES 1,2
TAB-119	IT 119	300	300	8"	.15	1/M450	1	ACCUTROL	H-AV3100	NOTES 1,2
TAB-122	LT. OFFICE 122	230	100	8"	.15	3/M450	2	ACCUTROL	H-AV3100	NOTES 1,2
TAB-124	LT. OFFICE 124	200	80	8"	.15	3/M450	2	ACCUTROL	H-AV3100	NOTES 1,2
TAB-127	FITNESS 127	450	150	10"	.15	3/M450	2	ACCUTROL	H-AV3100	NOTES 1,2
TAB-128	GREAT ROOM 128, KITCHEN	1500	600	14"	.15	2/M450	2	ACCUTROL	H-AV3100	NOTES 1,2
TAB-132	DORM 132	320	100	8"	.15	2/M450	2	ACCUTROL	H-AV3100	NOTES 1,2
TAB-138	LACTATION ROOM	75	50	6"	.15	3/M450	2	ACCUTROL	H-AV3100	NOTES 1,2
TAB-140	COMMUNITY/TRAINING ROOM 138	2200	100	14"	0.3"	4/M450	1	ACCUTROL	H-AV3100	NOTES 1,2

CEILING FAN SCHEDULE

NOTES:
1.FAN BLADE COLOR SELECTION BY ARCHITECT.
2.CONTROLLER PROVIDED BY MANUFACTURER AND INSTALLED BY M.C. LOW VOLTAGE WIRING FROM FAN TO CONTROL PAD BY A.T.C.
3.VERIFY EXTENSION TUBE LENGTH AND MOUNTING BRACKET WITH MANUFACTURER PRIOR TO ORDERING.
4.SUPPLY WITH WALL MOUNTED CONTROL PAD FULLY INTEGRATED WITH THE ONBOARD CONTROL.

TAG NAME	AREA SERVED	DIAMETER	FAN RPM	DRIVE TYPE	ELECTRICAL MHP	VOLTAGE	PHASES	FLA	MAXIMUM OVERCURRENT PROTECTION	DISCONNECT BY (NOTE A)	DISCONNECT TYPE (NOTE B)	CONTROLLER/ STARTER BY (NOTE A)	MANUFACTURER	MODEL	NOTES
CF-1	APPARTUS BAY	8'-0"	140	DIRECT	0.25	115	1	5.4	10 A	MFR	F	MFR	MACROAIR	370	NOTES 1, 2, 3 & 4

MOTOR OPERATED DAMPER SCHEDULE

NOTES:
1.COORDINATE DAMPER ACTUATOR LOCATION AND MOUNTING REQUIREMENTS WITH TEMPERATURE CONTROL CONTRACTOR.

TAG NAME	AREA SERVED	SIZE WIDTH	SIZE HEIGHT	CFM MAX.	CFM MIN.	BLADE CONFIGURATION	BLADE ORIENTATION	INSULATED	ACTUATOR TYPE (NOTE 1)	ACTUATOR STYLE	POWER FAILURE POSITION	POSITIVE POSITION FEEDBACK REQUIRED	NOTES
MOD-1	AHU-1 EXHAUST	22	12	1600	0	OPPOSED	HORIZONTAL	Yes	ELECTRIC	PROPORTIONAL	NORMALLY CLOSED (NC)	Yes	NOTE 1
MOD-2	AHU-1 RELIEF	28	24	4400	0	OPPOSED	HORIZONTAL	Yes	ELECTRIC	PROPORTIONAL	NORMALLY CLOSED (NC)	Yes	NOTE 1
MOD-3	MAU-1 OUTSIDE AIR	28	24	5800	0	OPPOSED	HORIZONTAL	Yes	ELECTRIC	PROPORTIONAL	NORMALLY CLOSED (NC)	Yes	NOTE 1
MOD-4	AHU-1 OUTSIDE AIR	46	30	6000	0	OPPOSED	HORIZONTAL	Yes	ELECTRIC	PROPORTIONAL	NORMALLY CLOSED (NC)	Yes	NOTE 1

GRILLES REGISTERS & DIFFUSERS SCHEDULE

NOTES:
1.CONTRACTOR SHALL DETERMINE PROPER MARGIN STYLE TO MATCH CEILING CONSTRUCTION.
2.ALL RUN OUT DUCTWORK TO DIFFUSERS SHALL BE NECK SIZE UNLESS OTHERWISE NOTED.

TAG NAME	MATERIAL	CONFIGURATION	MARGIN (NOTE 1)	INLET SIZE (IN.) (NOTE 2)	FACE SIZE (IN.)	VOLUME DAMPER REQUIRED	FINISH	MANUFACTURER	MODEL	NOTES
EG-1	ALUMINUM	PERFORATED FACE	LAY-IN	SEE DWG.	24x24	NO	WHITE	TITUS	PAR	
EG-2	STEEL	35 DEGREE DEFLECTION	1 1/4"	SEE DWG.	INLET +2	NO	WHITE	TITUS	350R	
EG-3	ALUMINUM	35 DEGREE DEFLECTION	1 1/4"	SEE DWG.	INLET +2	NO	WHITE	TITUS	350F	
RG-1	STEEL	PERFORATED FACE	LAY-IN	22x22	24x24	NO	WHITE	TITUS	PAR	
RG-2	STEEL	PERFORATED FACE	LAY-IN	22x22	24x24	NO	WHITE	TITUS	PXP	FACE ONLY - NON DUCTED
RG-3	STEEL	PERFORATED FACE	GYP.	22x22	24x24	NO	WHITE	TITUS	PXP	FACE ONLY - NON DUCTED. USED IN GYPSUM CEILING.
RG-4	STEEL	PERFORATED FACE	GYP.	22x22	24x24	NO	WHITE	TITUS	PAR	DUCTED RETURN. USED IN GYPSUM CEILING.
RG-5	STEEL	35 DEGREE DEFLECTION	1 1/4"	SEE DWG.	INLET +2	NO	WHITE	TITUS	350R	
SD-1	STEEL	LOUVER FACE	LAY-IN	SEE DWG.	24x24	NO	WHITE	TITUS	TMS	STAMPED LOUVER DROP FACE. MINIMUM OF TWO STEPDOWN DIFFUSION CONES
SG-1	STEEL	DOUBLE DEFLECTION	1 1/4"	SEE DWG.	INLET +2	NO	WHITE	TITUS	300R	FRONT BLADES VERTICAL UNLESS NOTED OTHERWISE
TG-1	STEEL	35 DEGREE DEFLECTION	1 1/4"	SEE DWG.	INLET +2	NO	WHITE	TITUS	350R	

LOUVER SCHEDULE

NOTES:
1. LOUVER PROVIDED BY MECHANICAL CONTRACTOR.
2. TYPE 2 FINISH : 204-R1 SATIN ANODIZED
3. TYPE 3 FINISH: BAKED ENAMEL FINISH ON PRETREATED PRIME PAINT. STANDARD COLOR - SELECTION BY ARCHITECT.

TAG NAME	AREA SERVED	CFM	SIZE (INCHES) WIDTH	SIZE (INCHES) HEIGHT	FREE AREA VELOCITY	S.P. IN. W.C.	FINISH (NOTE 1)	MANUFACTURER	MODEL	NOTES
EAL-1	APPARATUS BAY	5800	48	42	800	0.12	TYPE 2	RUSKIN	ELF375	
EAL-2	RELIEF AIR	9500	90	40	675	0.10	TYPE 3	RUSKIN	ELF375	
OAL-1	OUTSIDE AIR	11800	108	40	725	0.10	TYPE 3	RUSKIN	ELF375	

GLYCOL FEED SYSTEM

NOTES:
1.SEE 15510 [23 21 00] FOR ADDITIONAL SYSTEM REQUIREMENTS.

TAG NAME	AREA SERVED	TANK VOLUME	SYSTEM FILL PRESSURE	PUMP HEAD PSI	GPM	ELECTRICAL MHP	VOLTAGE	PHASES	DISCONNECT BY (NOTE A)	CONTROLLER/ STARTER BY	NOTES
GFS-1	GLYCOL WATER	50.0	12	50	1.8	0.33	115	1	MFR	MFR	NOTE 1

RADIATION SCHEDULE

NOTES:
1.CONTROLLED IN PARALLEL WITH IN-FLOOR HEAT OF TEMPERATURE ZONE CONTROLS. REFER TO 3/M450 FOR DESCIPTION OF HEATING SEQUENCE OF IN-INFLOOR HEAT.

TAG NAME	AREA SERVED	CAPACITY (BTUH/FT)	GPM	CABINET LENGTH	CABINET HEIGHT	CABINET DEPTH	AVERAGE WATER TEMP °F	MANUFACTURER	MODEL	NOTES
RAD-1	SMALL MEETING 102	275	0.5	13" - 1"	20"	2"	100	RITTLING	PRF-7	NOTE 1

OPN ARCHITECTS
301 N BROOM STREET #100
MADISON, WI 53703
608-819-0260 PHONE
www.opnarchitects.com
opn@opnarchitects.com

All reports, plans, specifications, computer files, field data, notes and other documents and instruments prepared by OPN Architects, Inc. as instruments of service shall remain the property of OPN Architects, Inc. OPN Architects, Inc. shall retain all common law, statutory and other reserved rights, including the copyright thereto.

© 2017 OPN Architects, Inc.

Owner
City of Madison Fire Department
314 W. Dayton St.
Madison, WI 53703

Project
Madison Fire Station 14
3201 Dairy Drive
Madison, WI 53718

Civil Engineer
Snyder & Associates, Inc
5010 Voges Rd
Madison WI, 53718
P. 608-838-0444

Structural Engineer
IMEG
1800 Deming Way #200
Middleton, WI 53562
P. 608-223-9600

Mechanical Engineer
IMEG
1800 Deming Way #200
Middleton, WI 53562
P. 608-223-9600

Electrical Engineer
IMEG
1800 Deming Way #200
Middleton, WI 53562
P. 608-223-9600

Key Plan

Sheet Issue Date
BID DOCUMENTS 11/03/17

Revision	Date
PR REV	11/1/2017

IMEG
1800 DEMING WAY, SUITE 200
MIDDLETON, WI 53562
608.223.9600 FAX: 608.836.0415
www.imegcorp.com
PROJECT # 17001440.00

IMEG CORP RESERVES PROPRIETARY RIGHTS, INCLUDING COPYRIGHTS, TO THIS DRAWING AND THE DATA SHOWN THEREON. SAID DRAWING AND/OR DATA ARE THE EXCLUSIVE PROPERTY OF IMEG CORP AND SHALL NOT BE USED OR REPRODUCED FOR ANY OTHER PURPOSE WITHOUT THE EXPRESS WRITTEN APPROVAL AND PARTICIPATION OF IMEG CORP. © 2017 IMEG CORP.

REFERENCE SCALE IN INCHES
0 1 2 3

Drawing
SCHEDULES - MECHANICAL

City of Madison Contract No. **8027**
OPN Project No. **17207000**

M501

ELECTRICAL SYMBOL LIST

SYMBOL:	TAG:	SPEC SECTION:	DESCRIPTION:
GB	GB	26 05 26	GROUND BUS
IBT	IBT	26 05 26	INTERSYSTEM BONDING TERMINATION
C E	ECONN	26 05 33	ELECTRICAL CONNECTION
J J	JB	26 05 33	JUNCTION BOX
	FB-1	26 27 26	FLOOR BOX - DUAL COMPARTMENT
HH	HH-#	26 05 31	HAND HOLE
DPM	DPM	26 24 16	DIGITAL POWER METER
TC	TC-1	26 09 33	TIME SWITCH
PB	PB		PUSHBUTTON OPERATOR PROVIDED BY G.C.
	PANEL '###'	26 24 16	PANELBOARD - RECESS MOUNT
	PANEL '###'	26 24 16	PANELBOARD - SURFACE MOUNT
	MX-#/MS-#/FCS-#	26 24 19	MANUAL SWITCH / STARTER / COMBINATION STARTER
	REC-DUP	26 27 26	DUPLEX RECEPTACLE, 125V
	REC-DUP-GFI	26 27 26	DUPLEX GFI RECEPTACLE, 125V
G	REC-DUP-GFI-R	26 27 26	GROUND FAULT DEVICE
W	REC-DUP-WP	26 27 26	DUPLEX GFI WEATHERPROOF RECEPTACLE 125V
U	REC-USB	26 27 26	DUPLEX RECEPTACLE, USB CHARGING
	REC-SIM-520R	26 27 26	SIMPLEX RECEPTACLE, 125V
	REC-SIM-1430R	26 27 26	RECEPTACLE, 14-30R, 125/250V
	REC-SIM-1450R	26 27 26	RECEPTACLE, 14-50R, 125/250V
		26 27 26	CORD DROP, 5-20R, 125V
		26 27 26	CORD DROP, 5-30R, 125V
	REC-TAMP	26 27 26	DUPLEX RECEPTACLE, TAMPERPROOF, 125V
	REC-TAMP-GFI	26 27 26	GFI DUPLEX RECEPTACLE, TAMPERPROOF, 125V
	REC-TAMP-QUAD	26 27 26	QUAD RECEPTACLE, TAMPERPROOF, 125V
	REC-QUAD	26 27 26	QUAD RECEPTACLE, 125V
	REC-QUAD-GFI	26 27 26	QUAD GFI RECEPTACLE, 125V
U	REC-QUAD-USB	26 27 26	QUAD RECEPTACLE, USB 125V
V	REC-QUAD-WP	26 27 26	QUAD GFI WEATHERPROOF RECEPTACLE, 125V
	REC-SIM-620R	26 27 26	RECEPTACLE, 6-20R, 250V
	REC-SIM-630R	26 27 26	RECEPTACLE, 6-30R, 250V
S	SW-1P	26 09 33	SWITCH - SINGLE POLE
S_M	SW-1P-M	26 09 33	SWITCH - MOMENTARY CONTACT
S_T	SW-1P-ADJ	26 09 33	SWITCH - LOCAL TIMER - USER ADJUSTABLE
S_W	SW-1P-WP	26 09 33	SWITCH - WEATHERPROOF
S_{3W}	SW-3W-WP	26 09 33	SWITCH - THREE WAY WEATHERPROOF
S_3	SW-3W	26 09 33	SWITCH - THREE WAY
S_4	SW-4W	26 09 33	SWITCH - FOUR WAY
D	SW-D-LED	26 09 33	DIMMER - LED
D_3	SW-D3-LED	26 09 33	DIMMER - LED - 3-WAY
D_M	SW-D-LED-M	26 09 33	DIMMER - LED - MOMENTARY CONTACT
D_{IN}	SW-D-IN	26 09 33	DIMMER - INCANDESCENT
D_{MIN}	SW-D-IN-M	26 09 33	DIMMER - INCANDESCENT - MOMENTARY CONTACT
LS	SW-LS	26 09 33	DAYLIGHT LEVEL SENSOR
PC	SW-LS-PC	26 09 33	PHOTOCELL
VS D	SW-VS-D	26 09 33	VACANCY SENSOR - DUAL TECHNOLOGY
VS D	SW-VS-D-W	26 09 33	VACANY SENSOR - DUAL TECHNOLOGY - WALL MOUNTED
OC D	SW-OC-D	26 09 33	OCCUPANCY SENSOR - DUAL TECHNOLOGY
OC D	SW-OC-D-W	26 09 33	OCCUPANCY SENSOR - DUAL TECHNOLOGY - WALL MOUNTED
S_0	SW-OC-P-0	26 09 33	SWITCH - OCCUPANCY SENSOR WALL SWITCH
S_{02}	SW-OC-P-02	26 09 33	SWITCH - OCCUPANCY SENSOR AND DUAL SWITCH
OC P	SW-OC-P-P	26 09 33	OCCUPANCY SENSOR - PASSIVE INFRARED 360 DEGREE COVERAGE
OC P	SW-OC-P-W	26 09 33	OCCUPANCY SENSOR - PASSIVE INFRARED - WALL MOUNTED
OC U	SW-OC-U	26 09 33	OCCUPANCY SENSOR - ULTRASONIC 360 DEGREE COVERAGE
OC A	SW-OC-U-A	26 09 33	OCCUPANCY SENSOR - ULTRASONIC TWO SIDED CORRIDOR COVERAGE
OC U	SW-OC-U-W	26 09 33	OCCUPANCY SENSOR - ULTRASONIC - WALL MOUNTED
	DS-#	26 28 16	DISCONNECT
	F#	26 51 00	LINEAR LUMINAIRES
	F#	26 51 00	TROFFER
	F#	26 51 00	WALL SCONCE LUMINAIRE
	F#	26 51 00	DOWNLIGHT LUMINAIRE
	F#	26 51 00	INDUSTRIAL LUMINAIRE
	F#	26 51 00	WALL BRACKET LUMINAIRE
	S#	26 51 00	POLE MOUNTED LUMINAIRE
	X#	26 51 00	SINGLE FACE EXIT SIGN
	X#	26 51 00	DOUBLE FACE EXIT SIGN
	XM#	26 51 00	EMERGENCY UNIT
ETD	ETD	26 09 33	EMERGENCY LIGHTING CONTROL - 2A
ETD 2	ETD-2	26 09 33	EMERGENCY LIGHTING CONTROL - 1000W

ELECTRICAL SYMBOL LIST

SYMBOL:	TAG:	SPEC SECTION:	DESCRIPTION:
	FAP-1	28 31 00	FIRE ALARM CONTROL PANEL
SD	FA-120	28 31 00	FIRE ALARM SMOKE DETECTOR - CEILING MOUNTED
SD	FA-122	28 31 00	FIRE ALARM DUCT SMOKE DETECTOR
F	FA-130	28 31 00	FIRE ALARM MANUAL PULL STATION
FT	FA-131	28 31 00	FIRE ALARM MANUAL PULL STATION W/ COVER
H	FA-140	28 31 00	FIRE ALARM HEAT DETECTOR
HF	FA-141	28 31 00	HEAT DETECTOR - 200 DEGREE
CO	FA-150	28 31 00	FIRE ALARM CARBON MONOXIDE DETECTOR
MM	FA-160	28 31 00	FIRE ALARM ADDRESSABLE MONITOR MODULE
AR	FA-161	28 31 00	FIRE ALARM ADDRESSABLE RELAY
V1 V3 V7 VH VS	FA-200	28 31 00	FIRE ALARM VISUAL NOTIFICATION DEVICE - WALL MOUNTED
V1 V3 V7 VH VS	FA-201	28 31 00	FIRE ALARM VISUAL NOTIFICATION DEVICE - CEILING MOUNTED
V W	FA-203	28 31 00	FIRE ALARM VISUAL NOTIFICATION DEVICE - WALL MOUNTED - WEATHERPROOF
A	FA-210	28 31 00	FIRE ALARM AUDIO NOTIFICATION DEVICE - WALL MOUNTED
A1 A3 A7 AH AS	FA-211	28 31 00	FIRE ALARM AUDIO/VISUAL NOTIFICATION DEVICE - WALL MOUNTED
AW	FA-212	28 31 00	FIRE ALARM AUDIO/VISUAL NOTIFICATION DEVICE - WALL MOUNTED - WEATHERPROOF
AL	FA-213	28 31 00	FIRE ALARM AUDIO/VISUAL NOTIFICATION DEVICE - WALL MOUNTED, LOW FREQUENCY
AL	FA-214	28 31 00	FIRE ALARM AUDIO/VISUAL NOTIFICATION DEVICE - CEILING MOUNTED, LOW FREQUENCY
A	FA-230	28 31 00	FIRE ALARM AUDIO NOTIFICATION DEVICE - CEILING MOUNTED
A1 A3 A7 AH AS	FA-231	28 31 00	FIRE ALARM AUDIO/VISUAL NOTIFICATION DEVICE - CEILING MOUNTED
S	FA-232	28 31 00	FIRE ALARM CM LOUD SPEAKER
MH	FA-233	28 31 00	FIRE ALARM AUDIO NOTIFICATION DEVICE - WALL MOUNTED - MINI-HORN
SD	FA-250	28 31 00	FIRE ALARM SMOKE DAMPER - WALL MOUNTED
FS	FA-260	28 31 00	FIRE ALARM FLOW SWITCH TO MONITOR FIRE PROTECTION SYSTEM
MS	FA-261	28 31 00	FIRE ALARM MONITOR SWITCH TO MONITOR FIRE PROTECTION SYSTEM
PIV	FA-262	28 31 00	FIRE ALARM POST INDICATOR VALVE CONNECTION
EB	FA-263	28 31 00	FIRE ALARM ELECTRONIC BELL FOR SPRINKLER SYSTEM
DH	FA-270	28 31 00	FIRE ALARM ELECTROMAGNETIC DOOR HOLD DEVICE
HD	HD	ARCH	HAND DRYER
PP	PP	ARCH	PUSH PAD

ELECTRICAL EQUIPMENT TAGS

TAG:	DESCRIPTION:	RELATED SPECIFICATION
C-#	GENERAL PURPOSE CONTACTOR	26 28 21
CB-#	CIRCUIT BREAKER, REFER TO DISCONNECT AND STARTER SCHEDULE	26 14 19
CR-#	CORD REEL	26 27 26
DP-#	DISTRIBUTION PANEL	26 24 16
DS-#	DISCONNECT SWITCH, REFER TO DISCONNECT AND STARTER SCHEDULE	26 28 16
F#	LUMINAIRE TYPE	26 51 00
FAA-#	FIRE ALARM - ANNUNCIATOR	28 31 00
FAP-1	FIRE ALARM - CONTROL PANEL	28 31 00
FB-#	FLOOR BOX	26 27 26
FCS-#	FUSIBLE COMBINATION STARTER, REFER TO DISCONNECT AND STARTER SCHEDULE	26 24 19
FDS-#	FUSIBLE DISCONNECT SWITCH, REFER TO DISCONNECT AND STARTER SCHEDULE	26 28 16
GB-# GCC-#	GROUND BUS TEMP. GENERATOR CONNECTION CABINET (SEE FLOOR PLANS)	26 05 26
HH-#	HANDHOLE	26 05 33
LIV-#	LIGHTING INVERTER	26 52 15
INV-#	PHOTOVOLTAIC INVERTER	26 24 22
LC-#	LIGHTING CONTACTOR	26 28 31
MC-#	EXTERIOR MOUNTED METERING CABINET	26 20 00
MS-#	MANUAL STARTER, REFER TO DISCONNECT AND STARTER SCHEDULE	26 24 19
MTS-#	MANUAL TRANSFER SWITCH, REFER TO TRANSFER SWITCH SCHEDULE	26 36 00
MX-#	MANUAL SWITCH, REFER TO DISCONNECT AND STARTER SCHEDULE	26 24 19
NEP-#	FIRE ALARM - EXTENDER PANEL	28 31 00
R-#	RELAY	26 09 39
SPD-#	SURGE PROTECTION DEVICE	26 43 00
TC-#	TIME SWITCH	26 09 33
VFD-#	VARIABLE FREQUENCY DRIVE - REFER TO VFD SCHEDULE	26 29 23

SUGGESTED MATRIX OF RESPONSIBILITY

ITEM:	SHOWN ON:	FURNISHED BY:	INSTALLED BY:	NOTES:
TECHNOLOGY ROUGH-IN, REFER TO GENERAL TECHNOLOGY EQUIPMENT SCHEDULE AND SPECIFICATIONS FOR DEFINITION	T-SERIES	E.C.	E.C.	3. 4.
INFORMATION OUTLET FACEPLATES, JACKS, AND TERMINATIONS	T-SERIES	T.C.	T.C.	
CONDUIT SLEEVES (WHEN SHOWN ON DRAWINGS)	T-SERIES	E.C.	E.C.	
CONDUIT SLEEVES (NOT SHOWN BUT REQUIRED FOR PROPER INSTALLATION OF SYSTEM)	N/A	T.C.	T.C.	2. 4.
TELECOMMUNICATION SYSTEMS ROUGH-IN	T-SERIES	T.C.	E.C.	1.
TELECOMMUNICATION EQUIPMENT, CABLING, AND TERMINATIONS	T-SERIES	T.C.	T.C.	
CABLE TRAY (INCLUDING WIRE BASKET TRAY) REFER TO SPECIFICATION SECTION 27 05 28 FOR DEFINITION	T-SERIES	E.C.	E.C.	
LADDER RACK	T-SERIES	T.C.	T.C.	5.
GROUNDING LUGS ON TECHNOLOGY EQUIPMENT	T-SERIES	T.C.	E.C.	6.
BONDING SYSTEM FOR TECHNOLOGY SYSTEM, REFER TO SPECIFICATION SECTION 27 05 26 FOR DEFINITION	T-SERIES	E.C.	E.C.	7. 8.
CONNECTION OF TECHNOLOGY BONDING SYSTEM TO THE ELECTRICAL GROUND SYSTEM	T-SERIES	E.C.	E.C.	
LINE VOLTAGE POWER (+120V OR GREATER)	E-SERIES	E.C.	E.C.	
LINE VOLTAGE POWER (NOT SHOWN BUT REQUIRED FOR PROPER INSTALLATION OF SYSTEM)	N/A	T.C.	E.C.	2. 4.
LINE VOLTAGE POWER FOR DOOR HARDWARE POWER SUPPLIES	ARCH SPEC	E.C.	E.C.	
LOW VOLTAGE CABLING FOR TECHNOLOGY SYSTEMS	T-SERIES	T.C.	T.C.	
CABLE HANGERS AND SUPPORTS OR OTHER CABLE ROUTING METHODS (OTHER THAN CONDUIT AND CABLE TRAY)	T-SERIES	T.C.	T.C.	5.
TECHNOLOGY SERVICE ENTRANCE CONDUITS, HANDHOLES, AND MANHOLES	T-SERIES	E.C.	E.C.	

SUGGESTED MATRIX OF RESPONSIBILITY NOTES

1. LOCATIONS OF TELECOMMUNICATIONS ROUGH-INS SHALL BE INDICATED BY THE INFORMATION OUTLET SYMBOLS ON THE DRAWINGS. REFER TO THE TECHNOLOGY SYMBOL LIST FOR ADDITIONAL INFORMATION.
2. BASED ON THE INHERENT DIFFERENCES IN PRODUCTS FROM VARIOUS MANUFACTURERS, ALL REQUIRED EQUIPMENT MAY NOT BE SHOWN ON THE DRAWINGS FOR ALL ACCEPTABLE MANUFACTURERS.
3. INCLUDES BACKBOXES AND CONDUIT REQUIRED FOR THE TECHNOLOGY SYSTEMS INSTALLATION. THE E.C. SHALL BASE THE BID ON THE BASIS OF DESIGN SHOWN ON THE CONTRACT DOCUMENTS.
4. ALL CHANGES TO THE SLEEVES, BACKBOXES, CONDUITS, AND POWER REQUIRED BECAUSE OF THE T.C.'S SELECTION OF AN ALTERNATE ACCEPTABLE MANUFACTURER OR FROM SYSTEM CONFIGURATIONS THAT ARE LEFT TO THE CHOICE OF THE CONTRACTOR SHALL BE INCLUDED IN THE T.C.'S BID. THIS BID SHALL INCLUDE INSTALLATION BY A LICENSED ELECTRICIAN.
5. UNLESS TRADE RULES DICTATE OTHERWISE.
6. FURNISHED AS PART OF THE EQUIPMENT WHEN POSSIBLE, OR FURNISHED TO THE E.C. FOR INSTALLATION IN THE FIELD.
7. INCLUDES ALL CONDUCTORS, GROUND BARS, AND TERMINATIONS FOR THE COMPLETE BONDING SYSTEM REQUIRED BY THE SPECIFICATIONS.
8. REFER TO ELECTRICAL DRAWINGS FOR LOCATIONS OF PANELS AND SWITCHBOARDS SHOWN IN THE TECHNOLOGY BONDING RISER DIAGRAM AND TYPICAL TELECOM ROOM BONDING FLOW DIAGRAM.

ELECTRICAL GENERAL NOTES:

1. **##-###** INDICATES ELECTRICAL EQUIPMENT DEFINED IN ELECTRICAL SCHEDULES OR SPECIFICATION. REFER TO DRAWINGS CONTAINING ELECTRICAL SCHEDULES. PERMANENT NAMEPLATE SHALL MATCH FINAL EQUIPMENT NOMENCLATURE, NOT ELECTRICAL EQUIPMENT TAG NAME. REFER TO SPECIFICATIONS.
2. "NL" INDICATES LUMINAIRE IS UNSWITCHED FOR NIGHT LIGHT.
3. "E" INDICATES LUMINAIRE IS SWITCHED/CONTROLLED DURING NORMAL OPERATION AND OPERATES FROM EMERGENCY CIRCUIT UPON LOSS OF POWER.
4. SHADED LUMINAIRE OR DEVICE INDICATES LUMINAIRE OR DEVICE IS CONNECTED TO AN EMERGENCY CIRCUIT.

LUMINAIRE KEY:

LUMINAIRE — F1 = FIXTURE TAG; 1 = CIRCUIT NUMBER; a = SWITCH DESIGNATION; NL = SUBSCRIPT (IF APPLICABLE)

*IF LABEL IS ORIENTED HORIZONTALLY A SLASH WILL SEPARATE THIS INFORMATION. EX: F1 / 1 / a / NL

DEVICE KEY:

DEVICE — A = MOUNTING (IF APPLICABLE); 1 = CIRCUIT NUMBER

*IF LABEL IS ORIENTED HORIZONTALLY A SLASH WILL SEPARATE THIS INFORMATION. EX: A / 1

ELECTRICAL MOUNTING SUBSCRIPT KEY:

- A — MOUNT AT +6" TO CENTERLINE ABOVE COUNTER OR BACKSPLASH
- C — MOUNT AT CEILING
- H — MOUNT ORIENTED HORIZONTALLY
- L — MOUNT IN CASEWORK
- M — MOUNT IN MODULAR FURNITURE
- R — MOUNT IN SURFACE RACEWAY

ELECTRICAL INSTALLATION NOTES:

1. THE COMPLETE INSTALLATION SHALL BE IN ACCORDANCE WITH THE ADA STANDARDS FOR ACCESSIBLE DESIGN. REFER TO THE ADA GUIDELINES FOR ALL CONFIGURATIONS DETAIL ON THIS PAGE FOR ADDITIONAL INFORMATION.
2. CIRCUIT NUMBERS ARE SHOWN FOR CIRCUIT IDENTIFICATION. CIRCUITING SHALL AGREE WITH NUMBERING ON THE PANEL PROVIDED. COMMON NEUTRALS MAY NOT BE USED FOR BRANCH CIRCUITS. BALANCE THE LOAD ON PANEL AS EVENLY AS POSSIBLE BETWEEN EACH PHASE.
3. CIRCUITS SERVING EMERGENCY AND EXIT LUMINAIRES WILL BE RUN IN A SEPARATE RACEWAY FROM ALL OTHER CIRCUITS.
4. FLUSH MOUNT ALL LIGHTING CONTROL DEVICES AT +42" FROM FLOOR (CENTERLINE DIMENSION), EXCEPT WHERE OTHERWISE NOTED. DEVICES MAY BE SURFACE MOUNTED WHEN CONDUIT IS SPECIFIED EXPOSED.
5. FLUSH MOUNT ALL DUPLEX RECEPTACLES AND TECHNOLOGY OUTLETS AT +18" FROM FLOOR (CENTERLINE DIMENSION), EXCEPT WHERE OTHERWISE NOTED. RECEPTACLES AND OUTLETS MAY BE SURFACE MOUNTED WHEN CONDUIT IS SPECIFIED EXPOSED.
6. ALL MATERIALS USED TO SEAL PENETRATIONS OF FIRE RATED WALLS AND FLOORS SHALL BE TESTED AND CERTIFIED AS A SYSTEM PER ASTM E814 STANDARDS FOR FIRE TESTS OF THROUGH-PENETRATION FIRESTOPS.
7. CONNECTION FOR ELECTRIC WATER COOLERS (EWC) SHALL BE COORDINATED WITH TYPE OF EWC TO BE INSTALLED.
8. MOUNT ALL FIRE ALARM PULL STATIONS AT +42" FROM FLOOR (CENTERLINE DIMENSION) EXCEPT WHERE OTHERWISE NOTED.
9. INSTALL ALL WALL MOUNTED FIRE ALARM NOTIFICATION DEVICES AT 90" ABOVE FINISHED FLOOR OR 6" BELOW THE CEILING, WHICHEVER IS LOWER, EXCEPT WHERE OTHERWISE NOTED. HEIGHT SHALL BE MEASURED TO THE TOP OF THE DEVICE.
10. CONTRACTOR SHALL COORDINATE THE LOCATION OF ALL CEILING MOUNTED DEVICES AND EQUIPMENT WITH LUMINAIRES, SPRINKLER, AND CEILING DIFFUSERS. CENTER ALL DEVICES IN CEILING TILE PATTERN. SMOKE DETECTORS AND OCCUPANCY/VACANCY SENSORS SHALL BE LOCATED NO CLOSER THAN 3 FEET TO AN AIR SUPPLY DIFFUSER OR RETURN GRILLE.
11. CONTRACTOR SHALL VERIFY ALL FURNITURE, MODULAR FURNITURE, AND EQUIPMENT LOCATIONS WITH ARCHITECTURAL PLANS, ELEVATIONS, AND REVIEWED SHOP DRAWINGS. PRIOR TO MAKING THE ACTUAL ELECTRICAL INSTALLATION, THIS CONTRACTOR SHALL ADJUST RECEPTACLES, OUTLETS, OR CONNECTION LOCATIONS TO ACCOMMODATE FURNITURE AND/OR EQUIPMENT.
12. ELECTRICAL AND TECHNOLOGY EQUIPMENT SHALL BE MOUNTED TO AVOID IMPEDANCE OF, OPERATION OF, AND/OR ACCESS TO ELECTRICAL AND MECHANICAL EQUIPMENT. ALL MOUNTING OF ELECTRICAL AND TELECOMMUNICATIONS EQUIPMENT, ON EQUIPMENT SUPPLIED BY ANOTHER CONTRACTOR, SHALL BE APPROVED IN ADVANCE BY THE OTHER CONTRACTOR.
13. CONTRACTOR SHALL BE RESPONSIBLE FOR ALL OPENINGS REQUIRED IN WALLS. ALL OPENINGS SHALL BE REPAIRED TO MATCH EXISTING BY A QUALIFIED CONTRACTOR AT THE EXPENSE OF THIS CONTRACTOR. ALL CONDUITS THROUGH WALLS SHALL BE GROUTED OR SEALED INTO OPENINGS.
14. ALL WELDING SHALL BE ACCORDING TO AMERICAN WELDING SOCIETY STANDARDS. CONTRACTOR SHALL FURNISH TO THE ARCHITECT/ENGINEER CERTIFICATES QUALIFYING EACH WELDER, PRIOR TO START OF WORK. THE ARCHITECT/ENGINEER RESERVES THE RIGHT TO REQUIRE QUALIFYING DEMONSTRATION, AT THE CONTRACTOR'S EXPENSE, OF ANY WELDERS ASSIGNED TO THE JOB.
15. CONTRACTOR SHALL REMOVE AND REINSTALL ALL CEILING TILES AS REQUIRED FOR THE EXECUTION OF ELECTRICAL WORK. CONTRACTOR SHALL REPLACE CEILING TILES WITH IDENTICAL MATERIAL WHERE DAMAGED BY THIS CONTRACTOR.
16. REFER TO ARCHITECTURAL REFLECTED CEILING PLAN, ELECTRICAL, TECHNOLOGY AUDIO/VISUAL, AND OTHER ELECTRICAL PLANS FOR EXACT LOCATIONS OF ALL CEILING MOUNTED DEVICES, OTHER THAN SPRINKLERS.
17. CONTRACTOR TO TAKE DISTANCE OF CONDUIT AND WIRE INTO ACCOUNT FOR PURPOSES OF INCREASING WIRE AND CONDUIT SIZE TO AVOID EXCESSIVE VOLTAGE DROP.

IMEG
1800 DEMING WAY, SUITE 200
MIDDLETON, WI 53562
608.223.9600 FAX: 608.836.0415
www.imegcorp.com
PROJECT # 170011400.00

IMEG CORP RESERVES PROPRIETARY RIGHTS, INCLUDING COPYRIGHTS, TO THIS DRAWING AND THE DATA SHOWN THEREON. SAID DRAWING AND/OR DATA ARE THE EXCLUSIVE PROPERTY OF IMEG CORP AND SHALL NOT BE USED OR REPRODUCED FOR ANY OTHER PROJECT WITHOUT THE EXPRESS WRITTEN APPROVAL AND PARTICIPATION OF IMEG CORP. © 2017 IMEG CORP.

REFERENCE SCALE IN INCHES: 0 1 2 3

OPN ARCHITECTS
301 N BROOM STREET #100
MADISON, WI 53703
608-819-0260 PHONE
www.opnarchitects.com
opn@opnarchitects.com

All reports, plans, specifications, computer files, field data, notes and other documents and instruments prepared by OPN Architects, Inc. as instruments of service shall remain the property of OPN Architects, Inc. OPN Architects, Inc. shall retain all common law, statutory and other reserved rights, including the copyright thereto.

© 2017 OPN Architects, Inc.

Owner
City of Madison Fire Department
314 W. Dayton St.
Madison, WI 53703

Project
Madison Fire Station 14
3201 Dairy Drive
Madison, WI 53718

Civil Engineer
Snyder & Associates, Inc
5010 Voges Rd
Madison WI, 53718
P. 608-838-0444

Structural Engineer
IMEG
1800 Deming Way #200
Middleton, WI 53562
P. 608-223-9600

Mechanical Engineer
IMEG
1800 Deming Way #200
Middleton, WI 53562
P. 608-223-9600

Electrical Engineer
IMEG
1800 Deming Way #200
Middleton, WI 53562
P. 608-223-9600

Key Plan

Sheet Issue Date
BID DOCUMENTS 11/03/17

Revision Date

Drawing
ELECTRICAL COVER SHEET

City of Madison Contract No. **8027**
OPN Project No. **17207000**

E000

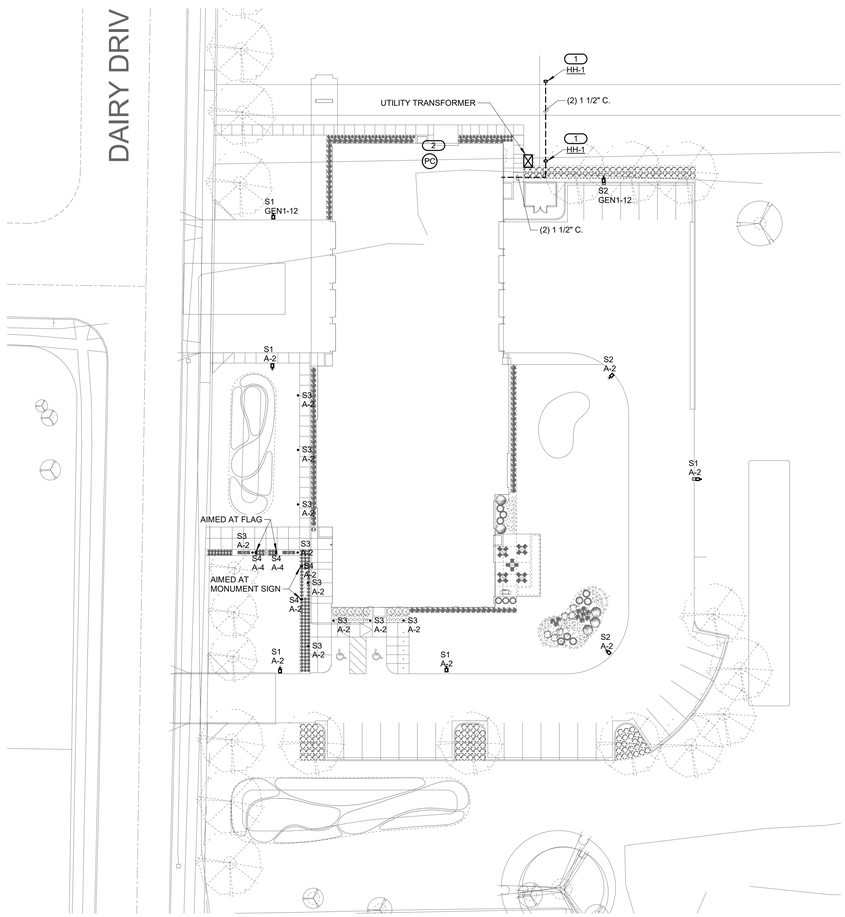

1 SITE PLAN - ELECTRICAL

1" = 30'-0"

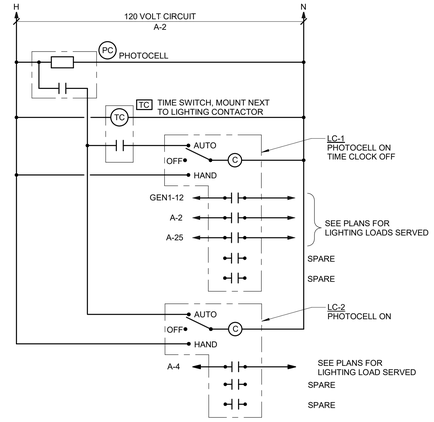

2 EXTERIOR LIGHTING CONTROL DETAIL

NO SCALE

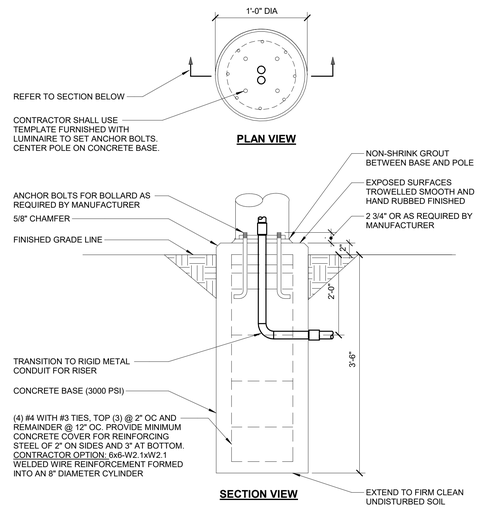

3 BOLLARD BASE DETAIL

NO SCALE

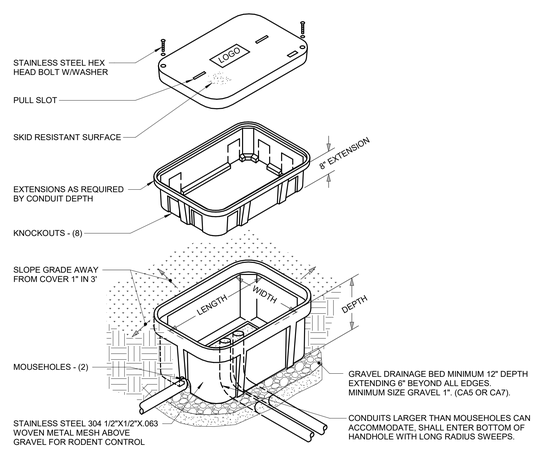

NOTES :

1. ALL DIMENSIONS ARE NOMINAL INSIDE CLEARANCES.
2. ANY SPLICES OR DEVICES IN HANDHOLE SHALL BE SUBMERSIBLE.

4 EXTERIOR HANDHOLE DETAIL

NO SCALE

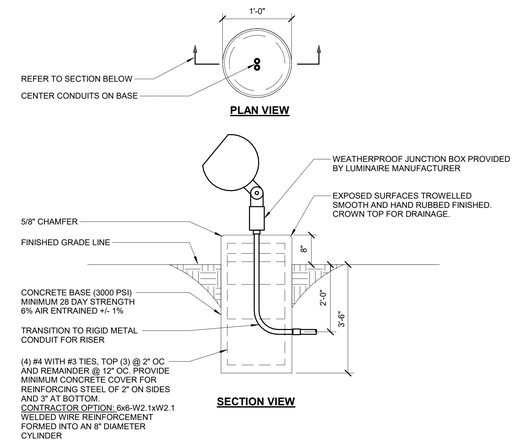

5 GROUND MOUNT BASE DETAIL

NO SCALE

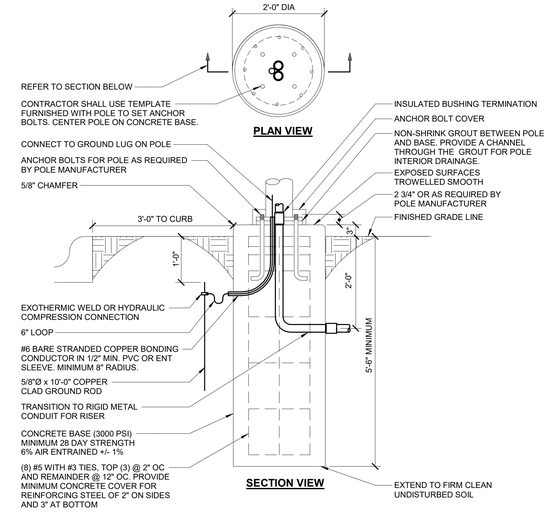

6 POLE BASE DETAIL

NO SCALE

SHEET NOTES :

1. COORDINATE LIGHT FIXTURE LOCATIONS WITH LANDSCAPING PLANS.

KEYNOTES: (#)

1. PROVIDE (2) 1 1/2" CONDUITS FROM HAND HOLES HH-1 TO NORTH WALL OF ELECTRICAL ROOM 112 FOR FUTURE SITE POWER. STUB INTO ELECTRICAL ROOM AND CAP OFF FOR FUTURE USE. LOCATION ONE HAND HOLE ON EACH SIDE IF THE UTILITY EASEMENT IN APPROXIMATE LOCATIONS SHOWN. REFER TO CIVIL DRAWINGS FOR EASEMENT LOCATION. COORDINATE EXACT LOCATION OF HAND HOLES WITH OWNER. REFER TO HAND HOLE DETAIL ON 4E050 FOR ADDITIONAL INFORMATION.
2. MOUNT PER MANUFACTURER INSTALLATION RECOMMENDATIONS FOR PHOTOCELL OPRATION.

OPN ARCHITECTS

301 N BROOM STREET #100
MADISON, WI 53703
608-819-0260 PHONE
www.opnarchitects.com
opn@opnarchitects.com

All reports, plans, specifications, computer files, field data, notes and other documents and instruments prepared by OPN Architects, Inc. as instruments of service shall remain the property of OPN Architects, Inc. OPN Architects, Inc. shall retain all common law, statutory and other reserved rights, including the copyright thereto.

© 2017 OPN Architects, Inc.

Owner

City of Madison Fire Department
314 W. Dayton St.
Madison, WI 53703

Project

Madison Fire Station 14
3201 Dairy Drive
Madison, WI 53718

Civil Engineer

Snyder & Associates, Inc
5010 Voges Rd
Madison WI, 53718
P. 608-838-0444

Structural Engineer

IMEG
1800 Deming Way #200
Middleton, WI 53562
P. 608-223-9600

Mechanical Engineer

IMEG
1800 Deming Way #200
Middleton, WI 53562
P. 608-223-9600

Electrical Engineer

IMEG
1800 Deming Way #200
Middleton, WI 53562
P. 608-223-9600

Key Plan

Sheet Issue Date	
BID DOCUMENTS	11/03/17

Revision	Date

Drawing

SITE PLAN - ELECTRICAL

City of Madison Contract No. **8027**
OPN Project No. **17207000**

E050

IMEG
1800 DEMING WAY, SUITE 200
MIDDLETON, WI 53562
608.223.9600 FAX: 608.836.0415
www.imegcorp.com
PROJECT # 170014G.00

IMEG CORP RESERVES PROPRIETARY RIGHTS, INCLUDING COPYRIGHTS, TO THIS DRAWING AND THE DATA SHOWN THEREON. SAID DRAWING AND/OR DATA ARE THE EXCLUSIVE PROPERTY OF IMEG CORP AND SHALL NOT BE USED OR REPRODUCED FOR ANY OTHER PROJECT WITHOUT THE EXPRESS WRITTEN APPROVAL AND PARTICIPATION OF IMEG CORP. © 2017 IMEG CORP.

REFERENCE SCALE IN INCHES
0 1 2 3

SHEET NOTES :

1. COORDINATE HANGING OF EQUIPMENT AND DEVICES IN APARATUS BAY AND SURROUNDING SPACES WITH STRUCTUAL METAL ROOF DECK, DECK MANUFACTURER'S REQUIREMENTS, AND OTHER TRADES. UTILIZE DECK MANUFACTURER HANGERS TO SUPPORT EQUIPMENT AND DEVICES WHERE APPLICABLE. ENSURE DECK HANGER LOADING LIMITS AND SQUARE FOOT LOADING LIMITS ARE NOT EXCEEDED FOR EQUIPMENT FROM ALL TRADES.
2. CONCEAL ALL CONDUITS WHERE POSSIBLE. WHERE NOT POSSIBLE, ROUTE EXPOSED CONDUITS IN INCONSPICUOS LOCATIONS APPROVED BY ARCHITECT.
3. PROVIDE EMERGENCY TRANSFER DEVICE SHOWN ON EL102 MONITORING AN UNSWITCHED PORTION OF GEN2-3. UPON LOSS OF NORMAL POWER, TRANSFER DEVICE IS TO TRANSFER F11 FIXTURES TO AN UNSWITCHED PORTION OF THEIR LIGHTING CIRCUIT.
4. F1 FIXTURES TO BE MOUNTED TIGHT TO BEAMS.

KEYNOTES: (#)

1. DOOR OPEN AND CLOSE SIGNAL LIGHTS TYPE "SR" AND "SG" MOUNTED AT APPROXIMATELY 8'-0" AFF. CENTERED VERTICALLY ON STEEL PURLIN WITH ANY JUNCTION BOXES PAINTED TO MATCH THE STRUCTURAL STEEL. ("SR" RED ABOVE "SG" GREEN LIGHT). INTERLOCK WITH N.O. 2-SPOT DOOR POSITION SWITCH (SQ. "D" HD IND. XCKT4-SERIES) IN NEMA 1 ENCLOSURE. PROVIDE (120/24 VOLT) TRANSFORMER FOR DOOR POSITION CONTROL WITH TOGGLE SWITCH DISCONNECT. SEQUENCE: RED LIGHT SHALL BE ACTIVATED UPON BAY DOOR OPENING; GREEN LIGHT COMES ON WITH BAY DOOR IN FULL OPEN POSITION; RED LIGHT COMES ON WITH DOOR CLOSING AND REMAINS ON UNTIL 30 SECONDS (TIME DELAY ADJ.) AFTER DOOR CLOSES. REFER TO DETAIL 2/EL101 FOR MORE INFORMATION.
2. ROUTE CONDUIT IN THIS AREA ALONG THE WALL TO AVOID THE TRANSPARENT WALL ABOVE.
3. REFER TO 2/E050.
4. EMERGENCY TRANSFER DEVICE TO MONITOR UNSWITCHED PORTION OF EXTERIOR EMERGENCY LIGHTING CIRCUIT A-25, SWITCHING THE FIXTURES TO THE EMERGENCY CIRCUIT EM1-3 UPON LOSS OF NORMAL POWER.
5. F1 FIXTURES CONTINUE ACROSS THE APPARATUS BAY ABOVE THE HARD LID OF ROOM 112 AND 113.
6. SOLATUBE DAYLIGHT TO BE CONTROLLED VIA WALL DIMMER PER MANUFACTURERS INSTRUCTIONS, LINKED TOGETHER WITH SOLATUBES IN THE SAME ROOM TO ONE WALL SWITCH.

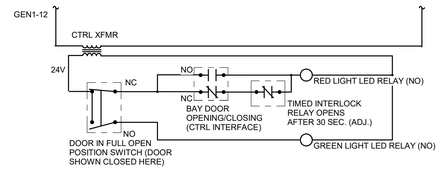

2 BAY DOOR ANNUNCIATION WIRING DIAGRAM

NO SCALE

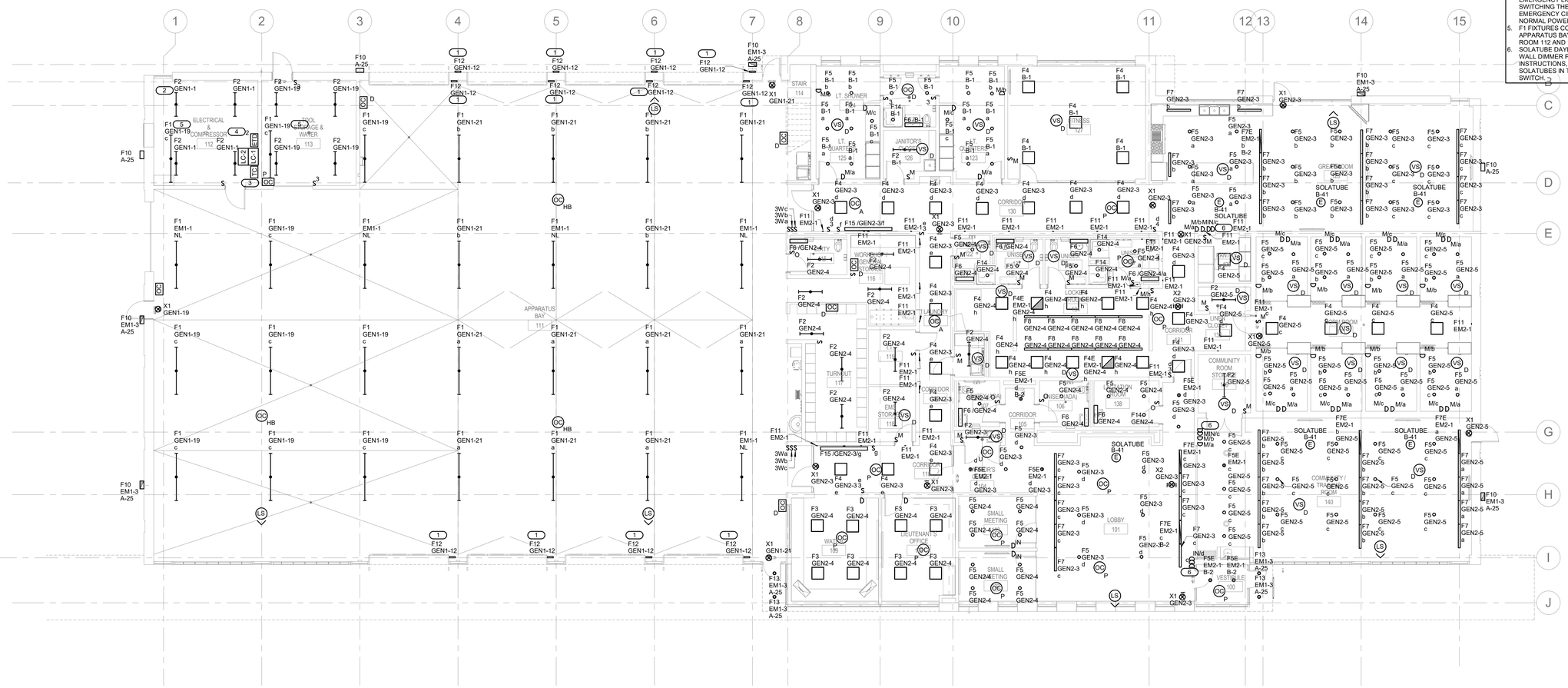

1 FLOOR PLAN LEVEL 1 - LIGHTING

1/8" = 1'-0"

OPN ARCHITECTS
301 N BROOM STREET #100
MADISON, WI 53703
608-819-0260 PHONE
www.opnarchitects.com
opn@opnarchitects.com

All reports, plans, specifications, computer files, field data, notes and other documents and instruments prepared by OPN Architects, Inc. as instruments of service shall remain the property of OPN Architects, Inc. OPN Architects, Inc. shall retain all common law, statutory and other reserved rights, including the copyright thereto.

© 2017 OPN Architects, Inc.

Owner
City of Madison Fire Department
314 W. Dayton St.
Madison, WI 53703

Project
Madison Fire Station 14
3201 Dairy Drive
Madison, WI 53718

Civil Engineer
Snyder & Associates, Inc
5010 Voges Rd
Madison WI, 53718
P. 608-838-0444

Structural Engineer
IMEG
1800 Deming Way #200
Middleton, WI 53562
P. 608-223-9600

Mechanical Engineer
IMEG
1800 Deming Way #200
Middleton, WI 53562
P. 608-223-9600

Electrical Engineer
IMEG
1800 Deming Way #200
Middleton, WI 53562
P. 608-223-9600

Key Plan

Sheet Issue Date
BID DOCUMENTS 11/03/17

Revision Date

Drawing
FLOOR PLAN LEVEL 1 - LIGHTING

IMEG
1800 DEMING WAY, SUITE 200
MIDDLETON, WI 53562
608.223.9600 FAX: 608.836.0415
www.imegcorp.com
PROJECT # 170011400.00

IMEG CORP RESERVES PROPRIETARY RIGHTS, INCLUDING COPYRIGHTS, TO THIS DRAWING AND THE DATA SHOWN THEREON. SAID DRAWING AND/OR DATA ARE THE EXCLUSIVE PROPERTY OF IMEG CORP AND SHALL NOT BE USED OR REPRODUCED FOR ANY OTHER PROJECT WITHOUT THE EXPRESS WRITTEN APPROVAL AND PARTICIPATION OF IMEG CORP. © 2017 IMEG CORP.

REFERENCE SCALE IN INCHES
0 1 2 3

City of Madison Contract No. **8027**
OPN Project No. **17207000**

EL101

SHEET NOTES :

1. COORDINATE HANGING OF EQIUPMENT AND DEVICES IN APARATUS BAY AND SURROUNDING SPACES WITH STRUCTUAL METAL ROOF DECK, DECK MANUFACTURER'S REQUIREMENTS, AND OTHER TRADES. UTILIZE DECK MANUFACTURER HANGERS TO SUPPORT EQUIPMENT AND DEVICES WHERE POSSIBLE. ENSURE DECK HANGER LOADING LIMITS AND SQUARE FOOT LOADING LIMITS ARE NOT EXCEEDED FOR EQUIPMENT FROM ALL TRADES.
2. CONCEAL ALL CONDUITS WHERE POSSIBLE. WHERE NOT POSSIBLE, ROUTE EXPOSED CONDUITS IN INCONSPICUOUS LOCATIONS APPROVED BY ARCHITECT.

KEYNOTES : #

1. PROVIDE EMERGENCY TRANSFER DEVICE SHOWN ON EL102 MONITORING AN UNSWITCHED PORTION OF GEN2-3. UPON LOSS OF NORMAL POWER, TRANSFER DEVICE IS TO TRANSFER F11 FIXTURES TO AN UNSWITCHED PORTION OF THEIR LIGHTING CIRCUIT. MOUNT USING STRUT SUPPORTS.

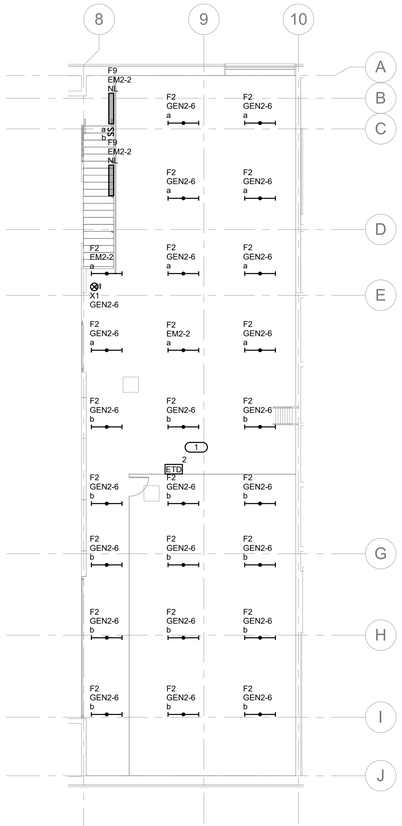

NORTH

1 MEZZANINE PLAN - LIGHTING

1/8" = 1'-0"

OPN ARCHITECTS

301 N BROOM STREET #100
MADISON, WI 53703
608-819-0260 PHONE
www.opnarchitects.com
opn@opnarchitects.com

All reports, plans, specifications, computer files, field data, notes and other documents and instruments prepared by OPN Architects, Inc. as instruments of service shall remain the property of OPN Architects, Inc. OPN Architects, Inc. shall retain all common law, statutory and other reserved rights, including the copyright thereto.

© 2017 OPN Architects, Inc.

Owner

City of Madison Fire Department

314 W. Dayton St.
Madison, WI 53703

Project

Madison Fire Station 14

3201 Dairy Drive
Madison, WI 53718

Civil Engineer

Snyder & Associates, Inc

5010 Voges Rd
Madison WI, 53718
P. 608-838-0444

Structural Engineer

IMEG

1800 Deming Way #200
Middleton, WI 53562
P. 608-223-9600

Mechanical Engineer

IMEG

1800 Deming Way #200
Middleton, WI 53562
P. 608-223-9600

Electrical Engineer

IMEG

1800 Deming Way #200
Middleton, WI 53562
P. 608-223-9600

Key Plan

Sheet Issue Date

BID DOCUMENTS 11/03/17

Revision	Date

IMEG

1800 DEMING WAY, SUITE 200
MIDDLETON, WI 53562
608.223.9600 FAX: 608.836.0415
www.imegcorp.com
PROJECT # 170011400.00

IMEG CORP RESERVES PROPRIETARY RIGHTS, INCLUDING COPYRIGHTS, TO THIS DRAWING AND THE DATA SHOWN THEREON. SAID DRAWING AND/OR DATA ARE THE EXCLUSIVE PROPERTY OF IMEG CORP AND SHALL NOT BE USED OR REPRODUCED FOR ANY OTHER PROJECT WITHOUT THE EXPRESS WRITTEN APPROVAL AND PARTICIPATION OF IMEG CORP. © 2017 IMEG CORP.

REFERENCE SCALE IN INCHES

0 1 2 3

Drawing

MEZZANINE PLAN - LIGHTING

City of Madison Contract No. **8027**
OPN Project No. **172070000**

EL102

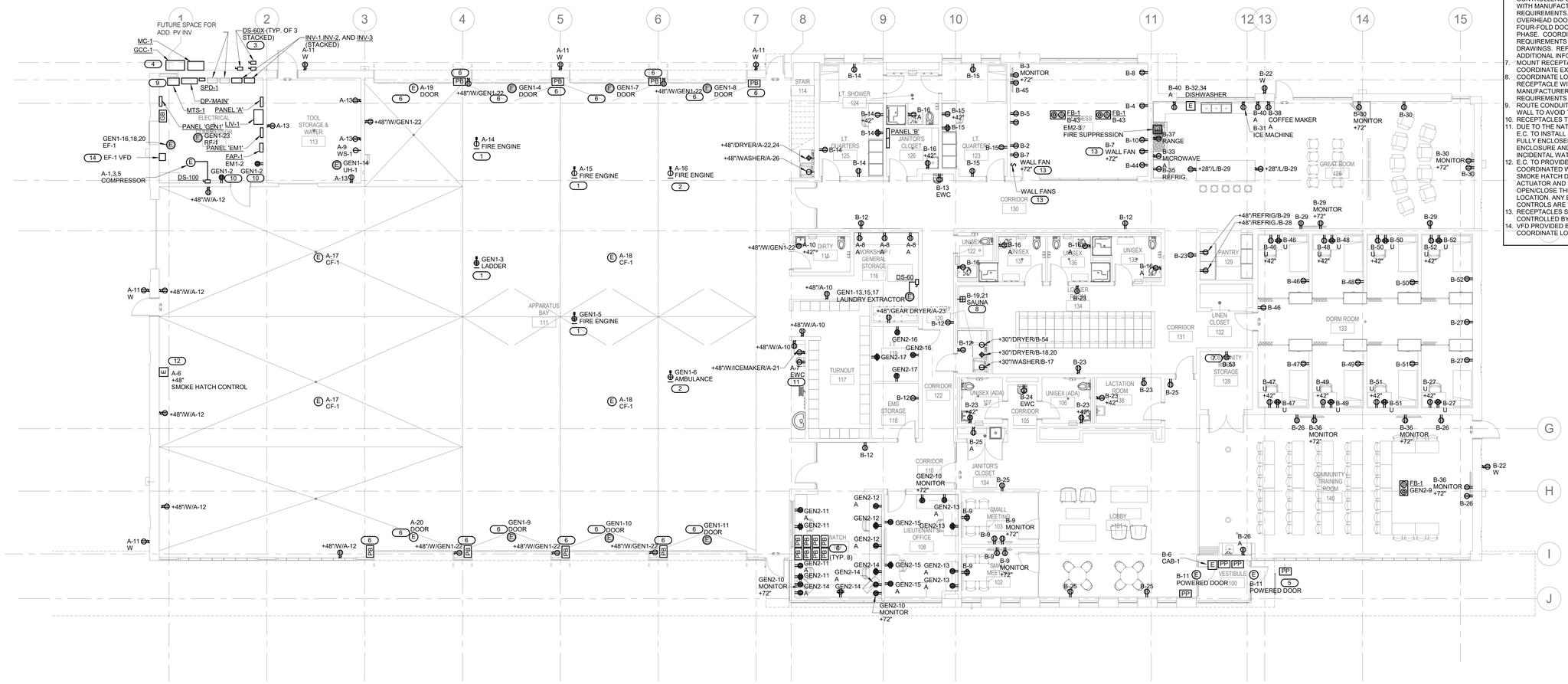

1 FLOOR PLAN LEVEL 1 - POWER

1/8" = 1'-0"

NORTH

SHEET NOTES :

1. COORDINATE HANGING OF EQUIPMENT AND DEVICES IN APARATUS BAY AND SURROUNDING SPACES WITH STRUCTUAL METAL ROOF DECK. DECK MANUFACTURER'S REQUIREMENTS, AND OTHER TRADES. UTILIZE DECK MANUFACTURER HANGERS TO SUPPORT EQUIPMENT AND DEVICES WHERE POSSIBLE. ENSURE DECK HANGER LOADING LIMITS AND SQUARE FOOT LOADING LIMITS ARE NOT EXCEEDED FOR EQUIPMENT FROM ALL TRADES.
2. CONCEAL ALL CONDUITS WHERE POSSIBLE. WHERE NOT POSSIBLE, ROUTE IN INCONSPICUOUS LOCATIONS APPROVED BY ARCHITECT.

KEYNOTES: (#)

1. DROP CORD RECEPTACLE SERVES FIRE ENGINE. COORDINATE EXACT LOCATION AND CORD LENGTH WITH OWNER PRIOR TO INSTALLATION. REFER TO 2/E300 FOR DROP CORD DETAIL.
2. DROP CORD RECEPTACLE SERVES AMBULANCE. COORDINATE EXACT LOCATION AND CORD LENGTH WITH OWNER PRIOR TO INSTALLATION. REFER TO 3/E300 FOR DROP CORD DETAIL.
3. PROVIDE LABEL ON EACH DISCONNECT SWITCH. LABEL SHALL READ "UTILITY PHOTOVOLTAIC INTERCONNECT DISCONNECT".
4. GENERATOR CONNECTION CABINET, GCC-1, SHALL BE WALL MOUNT, UL LISTED, STAINLESS STEEL NEMA 3R OR 4X HOUSING WITH LOCKABLE DOOR, 400 AMPS, 208/120 VOLT, 3 PHASE, 4 WIRE WITH COLOR-CODED CAM-LOCK CONNECTORS. APPROVED MANUFACTURERS INCLUDE BERTHOLD ELECTRIC CO. AND POWERTRON SERIES 400UL. SUBMIT PRODUCT DATA AND DIMENSIONED DRAWINGS UNDER DIVISION 26 05 00.
5. REFER TO LANDSCAPING PLANS FOR ADA BOLLARD LOCATIONS.
6. APPARATUS BAY DOOR CONTROLLERS AND PUSHBUTTONS ARE PROVIDED BY G.C. AND INSTALLED BY E.C. LOCATE PUSHBUTTON STATIONS FOR WEST DOORS AT WEST LOCATION SHOWN AND EAST DOORS AT EAST LOCATION SHOWN. REMOTE MOUNT DOOR CONTROLLERS ON MEZZANINE. COORDINATE WITH MANUFACTURERS INSTALLATION REQUIREMENTS. BASE BID IS SECTIONALIZED OVERHEAD DOORS. ADD ALTERNATE BID IS FOUR-FOLD DOORS CIRCUITED AT 208V, 3 PHASE. COORDINATE FINAL CIRCUITING REQUIREMENTS WITH FOUR-FOLD DOOR SHOP DRAWINGS. REFER TO ARCHITECTURAL FOR ADDITIONAL INFORMATION.
7. MOUNT RECEPTACLES AT A/V RACK LOCATION. COORDINATE EXACT LOCATION WITH OWNER.
8. COORDINATE LOCATION OF SAUNA RECEPTACLE WITH OWNER AND MANUFACTURER'S INSTALLATION REQUIREMENTS PRIOR TO INSTALLATION.
9. ROUTE CONDUIT IN THIS AREA ALONG THE WALL TO AVOID THE GLASS WINDOW ABOVE.
10. RECEPTACLES TO BE RED.
11. DUE TO THE NATURE OF THE APPARATUS BAY, E.C. TO INSTALL EWC OUTLET SUCH THAT IT IS FULLY ENCLOSED BY THE WATER COOLER ENCLOSURE AND PROTECTED FROM INCIDENTAL WATER SPRAY.
12. E.C. TO PROVIDE NECESSARY EQUIPMENT, COORDINATED WITH MANUFACTURER OF SMOKE HATCH DOOR, TO POWER 24V LINEAR ACTUATOR AND PROVIDE CONTROLS TO OPEN/CLOSE THE HATCH FROM THIS LOCATION. ANY EQUIPMENT ENCLOSURES AND CONTROLS ARE TO BE WET-LOCATION LISTED.
13. RECEPTACLES SERVING WALL FANS SHALL BE CONTROLLED BY WALL SWITCH.
14. VFD PROVIDED BY M.C. AND INSTALLED BY E.C. COORDINATE LOCATION WITH M.C.

OPN ARCHITECTS

301 N BROOM STREET #100
MADISON, WI 53703
608-819-0260 PHONE
www.opnarchitects.com
opn@opnarchitects.com

All reports, plans, specifications, computer files, field data, notes and other documents and instruments prepared by OPN Architects, Inc. as instruments of service shall remain the property of OPN Architects, Inc. OPN Architects, Inc. shall retain all common law, statutory and other reserved rights, including the copyright thereto.

© 2017 OPN Architects, Inc.

Owner

City of Madison Fire Department

314 W. Dayton St.
Madison, WI 53703

Project

Madison Fire Station 14

3201 Dairy Drive
Madison, WI 53718

Civil Engineer

Snyder & Associates, Inc

5010 Voges Rd
Madison WI, 53718
P. 608-838-0444

Structural Engineer

IMEG

1800 Deming Way #200
Middleton, WI 53562
P. 608-223-9600

Mechanical Engineer

IMEG

1800 Deming Way #200
Middleton, WI 53562
P. 608-223-9600

Electrical Engineer

IMEG

1800 Deming Way #200
Middleton, WI 53562
P. 608-223-9600

Key Plan

Sheet Issue Date	
BID DOCUMENTS	11/03/17

Revision	Date

Drawing

FLOOR PLAN LEVEL 1 - POWER

City of Madison Contract No. **8027**
OPN Project No. **17207000**

EP101

IMEG
1800 DEMING WAY, SUITE 200
MIDDLETON, WI 53562
608.223.9600 FAX: 608.836.0415
www.imegcorp.com
PROJECT # 17001140.00

IMEG CORP RESERVES PROPRIETARY RIGHTS, INCLUDING COPYRIGHTS, TO THIS DRAWING AND THE DATA SHOWN THEREON. SAID DRAWING AND/OR DATA ARE THE EXCLUSIVE PROPERTY OF IMEG CORP AND SHALL NOT BE USED OR REPRODUCED FOR ANY OTHER PROJECT WITHOUT THE EXPRESS WRITTEN APPROVAL AND PARTICIPATION OF IMEG CORP. © 2017 IMEG CORP.

REFERENCE SCALE IN INCHES

0 1 2 3

SHEET NOTES :

1. COORDINATE HANGING OF EQIUPMENT AND DEVICES IN APARATUS BAY AND SURROUNDING SPACES WITH STRUCTUAL METAL ROOF DECK, DECK MANUFACTURER'S REQUIREMENTS, AND OTHER TRADES. UTILIZE DECK MANUFACTURER HANGERS TO SUPPORT EQUIPMENT AND DEVICES WHERE POSSIBLE. ENSURE DECK HANGER LOADING LIMITS AND SQUARE FOOT LOADING LIMITS ARE NOT EXCEEDED FOR EQUIPMENT FROM ALL TRADES.
2. CONCEAL ALL CONDUITS WHERE POSSIBLE. WHERE NOT POSSIBLE, ROUTE IN INCONSPICUOUS LOCATIONS APPROVED BY ARCHITECT.

KEYNOTES: (#)

1. APPARATUS BAY DOOR CONTROLLERS AND PUSHBUTTONS ARE PROVIDED BY G.C. AND INSTALLED BY E.C. LOCATE PUSHBUTTON STATIONS FOR WEST DOORS AT WEST LOCATION SHOWN ON FIRST FLOOR AND EAST DOORS AT EAST LOCATION SHOWN ON FIRST FLOOR. REMOTE MOUNT DOOR CONTROLLERS ON MEZZANINE. COORDINATE WITH MANUFACTURERS INSTALLATION REQUIREMENTS. DEVICES SHOWN ARE TO BE STACKED VERTICALLY, ACCOUNTING FOR WORKING CLEARANCES AND CONDUIT ROUTING.
2. MOUNT DEVICES AND PANELS USING STRUT SUPPORTS.
3. VFD'S PROVIDED BY M.C., INSTALLED AND WIRED BY E.C. TO P-1, P-2, P-3, P-4, AHU-1 SUPPLY, AHU-1 RETURN, AHU-1 EXHAUST, AHU-1 ENERGY RECOVERY, AND MAU-1. CONFIRM WITH M.C. AND MECHANICAL SCHEDULES. DEVICES SHOWN ARE TO BE STACKED VERTICALLY, ACCOUNTING FOR WORKING CLEARANCES AND CONDUIT ROUTING.

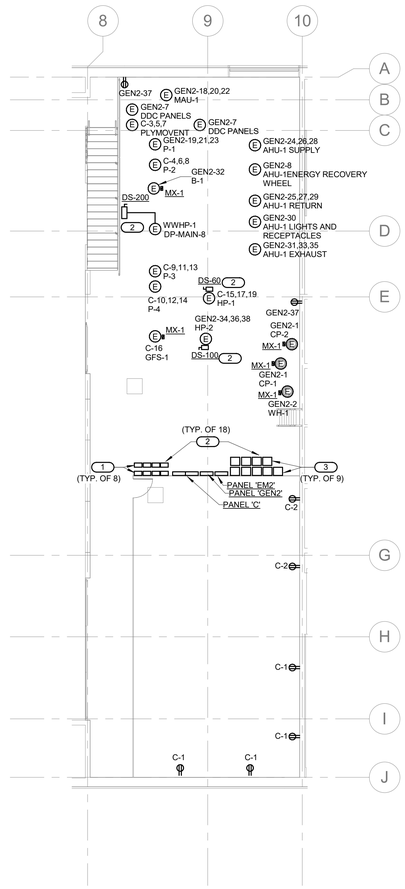

1 MEZZANINE PLAN - POWER

1/8" = 1'-0"

NORTH

IMEG

1800 DEMING WAY, SUITE 200
MIDDLETON, WI 53562
608.223.9600 FAX: 608.836.0415
www.imegcorp.com
PROJECT # 17001140.00

IMEG CORP RESERVES PROPRIETARY RIGHTS, INCLUDING COPYRIGHTS, TO THIS DRAWING AND THE DATA SHOWN THEREON. SAID DRAWING AND/OR DATA ARE THE EXCLUSIVE PROPERTY OF IMEG CORP AND SHALL NOT BE USED OR REPRODUCED FOR ANY OTHER PROJECT WITHOUT THE EXPRESS WRITTEN APPROVAL AND PARTICIPATION OF IMEG CORP. © 2017 IMEG CORP.

REFERENCE SCALE IN INCHES

0 1 2 3

OPN ARCHITECTS

301 N BROOM STREET #100
MADISON, WI 53703
608-819-0260 PHONE
www.opnarchitects.com
opn@opnarchitects.com

All reports, plans, specifications, computer files, field data, notes and other documents and instruments prepared by OPN Architects, Inc. as instruments of service shall remain the property of OPN Architects, Inc. OPN Architects, Inc. shall retain all common law, statutory and other reserved rights, including the copyright thereto.

© 2017 OPN Architects, Inc.

Owner

City of Madison Fire Department

314 W. Dayton St.
Madison, WI 53703

Project

Madison Fire Station 14

3201 Dairy Drive
Madison, WI 53718

Civil Engineer

Snyder & Associates, Inc

5010 Voges Rd
Madison WI, 53718
P. 608-838-0444

Structural Engineer

IMEG

1800 Deming Way #200
Middleton, WI 53562
P. 608-223-9600

Mechanical Engineer

IMEG

1800 Deming Way #200
Middleton, WI 53562
P. 608-223-9600

Electrical Engineer

IMEG

1800 Deming Way #200
Middleton, WI 53562
P. 608-223-9600

Key Plan

Sheet Issue Date

BID DOCUMENTS 11/03/17

Revision Date

Drawing

MEZZANINE PLAN - POWER

City of Madison Contract No. **8027**
OPN Project No. **17207000**

EP102

SHEET NOTES :

1. COORDINATE HANGING OF EQIUPMENT AND DEVICES IN APARATUS BAY AND SURROUNDING SPACES WITH STRUCTUAL METAL ROOF DECK. DECK MANUFACTURER'S REQUIREMENTS, AND OTHER TRADES. UTILIZE DECK MANUFACTURER HANGERS TO SUPPORT EQUIPMENT AND DEVICES WHERE POSSIBLE. ENSURE DECK HANGER LOADING LIMITS AND SQUARE FOOT LOADING LIMITS ARE NOT EXCEEDED FOR EQUIPMENT FROM ALL TRADES.
2. CONCEAL ALL CONDUITS WHERE POSSIBLE. WHERE NOT POSSIBLE, ROUTE IN INCONSPICUOUS LOCATIONS APPROVED BY ARCHITECT.

KEYNOTES: (#)

1. ROUTE CONDUIT IN THIS AREA ALONG THE WALL TO AVOID THE GLASS WINDOW ABOVE.

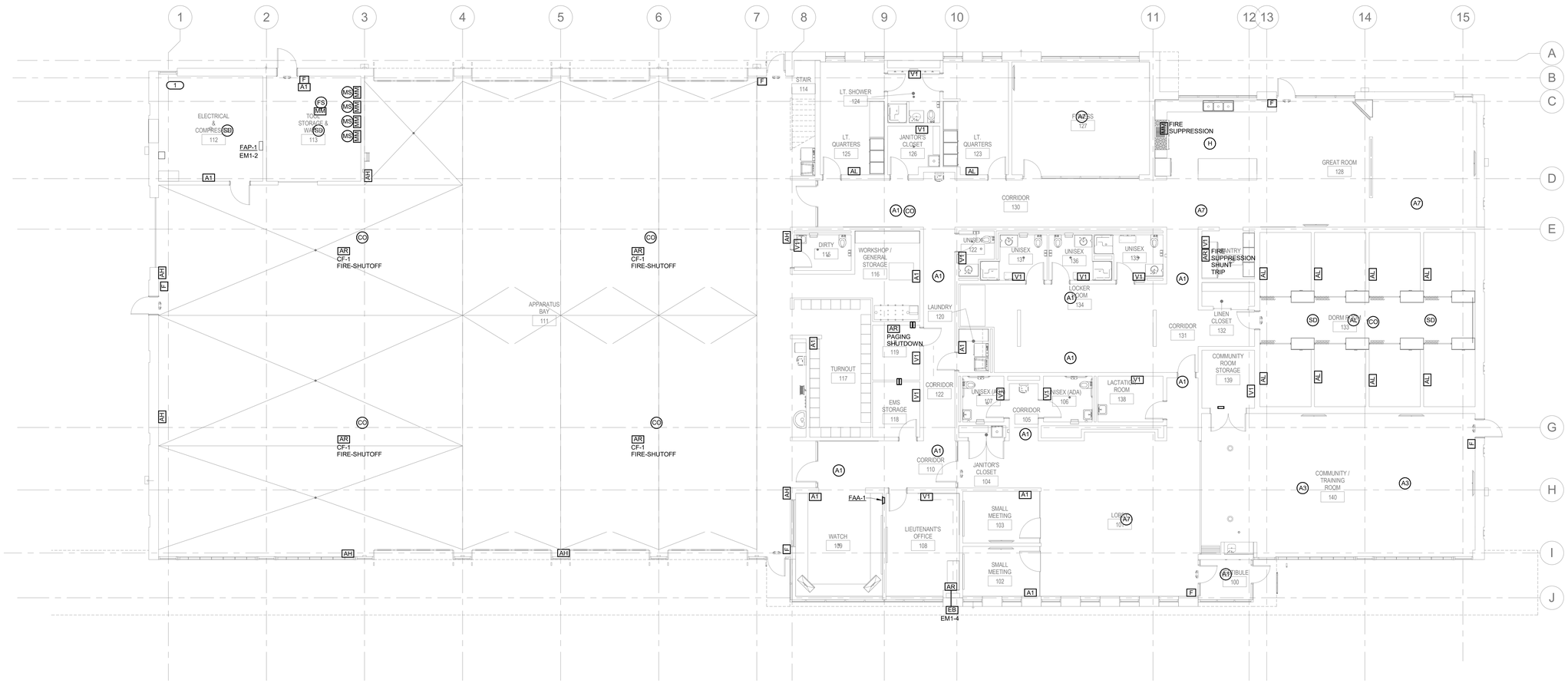

1 FLOOR PLAN LEVEL 1 - FIRE ALARM

1/8" = 1'-0"

NORTH

OPN ARCHITECTS

301 N BROOM STREET #100
MADISON, WI 53703
608-819-0260 PHONE
www.opnarchitects.com
opn@opnarchitects.com

All reports, plans, specifications, computer files, field data, notes and other documents and instruments prepared by OPN Architects, Inc. as instruments of service shall remain the property of OPN Architects, Inc. OPN Architects, Inc. shall retain all common law, statutory and other reserved rights, including the copyright thereto.

© 2017 OPN Architects, Inc.

Owner

City of Madison Fire Department
314 W. Dayton St.
Madison, WI 53703

Project

Madison Fire Station 14
3201 Dairy Drive
Madison, WI 53718

Civil Engineer

Snyder & Associates, Inc
5010 Voges Rd
Madison WI, 53718
P. 608-838-0444

Structural Engineer

IMEG
1800 Deming Way #200
Middleton, WI 53562
P. 608-223-9600

Mechanical Engineer

IMEG
1800 Deming Way #200
Middleton, WI 53562
P. 608-223-9600

Electrical Engineer

IMEG
1800 Deming Way #200
Middleton, WI 53562
P. 608-223-9600

Key Plan

Sheet Issue Date
BID DOCUMENTS 11/03/17

Revision Date

IMEG
1800 DEMING WAY, SUITE 200
MIDDLETON, WI 53562
608.223.9600 FAX: 608.836.0415
www.imegcorp.com
PROJECT # 17001140.00

IMEG CORP. RESERVES PROPRIETARY RIGHTS, INCLUDING COPYRIGHTS, TO THIS DRAWING AND THE DATA SHOWN THEREON. SAID DRAWING AND/OR DATA ARE THE EXCLUSIVE PROPERTY OF IMEG CORP. AND SHALL NOT BE USED OR REPRODUCED FOR ANY OTHER PROJECT WITHOUT THE EXPRESS WRITTEN APPROVAL AND PARTICIPATION OF IMEG CORP. © 2017 IMEG CORP.

REFERENCE SCALE IN INCHES
0 1 2 3

Drawing
FLOOR PLAN LEVEL 1 - FIRE ALARM

City of Madison Contract No. **8027**
OPN Project No. **17207000**

ES101

SHEET NOTES :

1. COORDINATE HANGING OF EQIUPMENT AND DEVICES IN APARATUS BAY AND SURROUNDING SPACES WITH STRUCTUAL METAL ROOF DECK, DECK MANUFACTURER'S REQUIREMENTS, AND OTHER TRADES. UTILIZE DECK MANUFACTURER HANGERS TO SUPPORT EQUIPMENT AND DEVICES WHERE POSSIBLE. ENSURE DECK HANGER LOADING LIMITS AND SQUARE FOOT LOADING LIMITS ARE NOT EXCEEDED FOR EQUIPMENT FROM ALL TRADES.
2. CONCEAL ALL CONDUITS WHERE POSSIBLE. WHERE NOT POSSIBLE, ROUTE IN INCONSPICUOUS LOCATIONS APPROVED BY ARCHITECT.

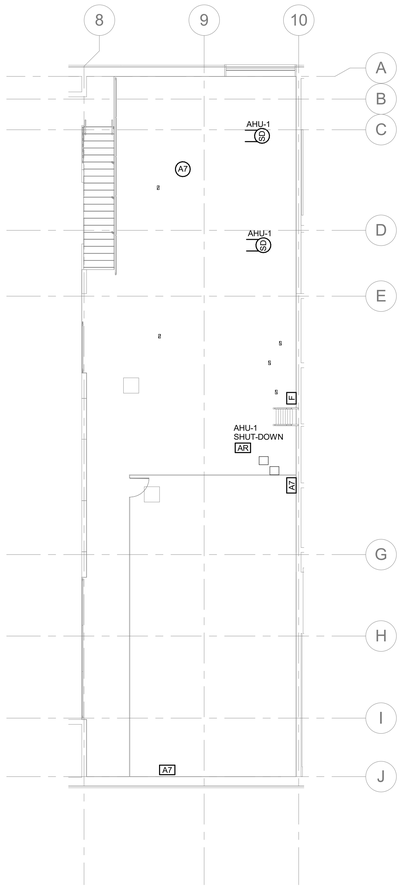

NORTH

1 **MEZZANINE PLAN - FIRE ALARM**
1/8" = 1'-0"

OPN ARCHITECTS

301 N BROOM STREET #100
MADISON, WI 53703
608-819-0260 PHONE
www.opnarchitects.com
opn@opnarchitects.com

All reports, plans, specifications, computer files, field data, notes and other documents and instruments prepared by OPN Architects, Inc. as instruments of service shall remain the property of OPN Architects, Inc. OPN Architects, Inc. shall retain all common law, statutory and other reserved rights, including the copyright thereto.

© 2017 OPN Architects, Inc.

Owner

City of Madison Fire Department
314 W. Dayton St.
Madison, WI 53703

Project

Madison Fire Station 14
3201 Dairy Drive
Madison, WI 53718

Civil Engineer

Snyder & Associates, Inc
5010 Voges Rd
Madison WI, 53718
P. 608-838-0444

Structural Engineer

IMEG
1800 Deming Way #200
Middleton, WI 53562
P. 608-223-9600

Mechanical Engineer

IMEG
1800 Deming Way #200
Middleton, WI 53562
P. 608-223-9600

Electrical Engineer

IMEG
1800 Deming Way #200
Middleton, WI 53562
P. 608-223-9600

Key Plan

Sheet Issue Date
BID DOCUMENTS 11/03/17

Revision Date

IMEG
1800 DEMING WAY, SUITE 200
MIDDLETON, WI 53562
608.223.9600 FAX: 608.836.0415
www.imegcorp.com
PROJECT # 17001140.00

IMEG CORP RESERVES PROPRIETARY RIGHTS, INCLUDING COPYRIGHTS, TO THIS DRAWING AND THE DATA SHOWN THEREON. SAID DRAWING AND/OR DATA ARE THE EXCLUSIVE PROPERTY OF IMEG CORP AND SHALL NOT BE USED OR REPRODUCED FOR ANY OTHER PROJECT WITHOUT THE EXPRESS WRITTEN APPROVAL AND PARTICIPATION OF IMEG CORP. © 2017 IMEG CORP.

REFERENCE SCALE IN INCHES
0 1 2 3

Drawing
MEZZANINE PLAN - FIRE ALARM

City of Madison Contract No. **8027**
OPN Project No. **17207000**

ES102

SHEET NOTES :

1. ALL WORK ASSOCIATED WITH THE PHOTOVOLTAIC SYSTEM SHALL BE INCLUDED UNDER ADD ALTERNATE #1.

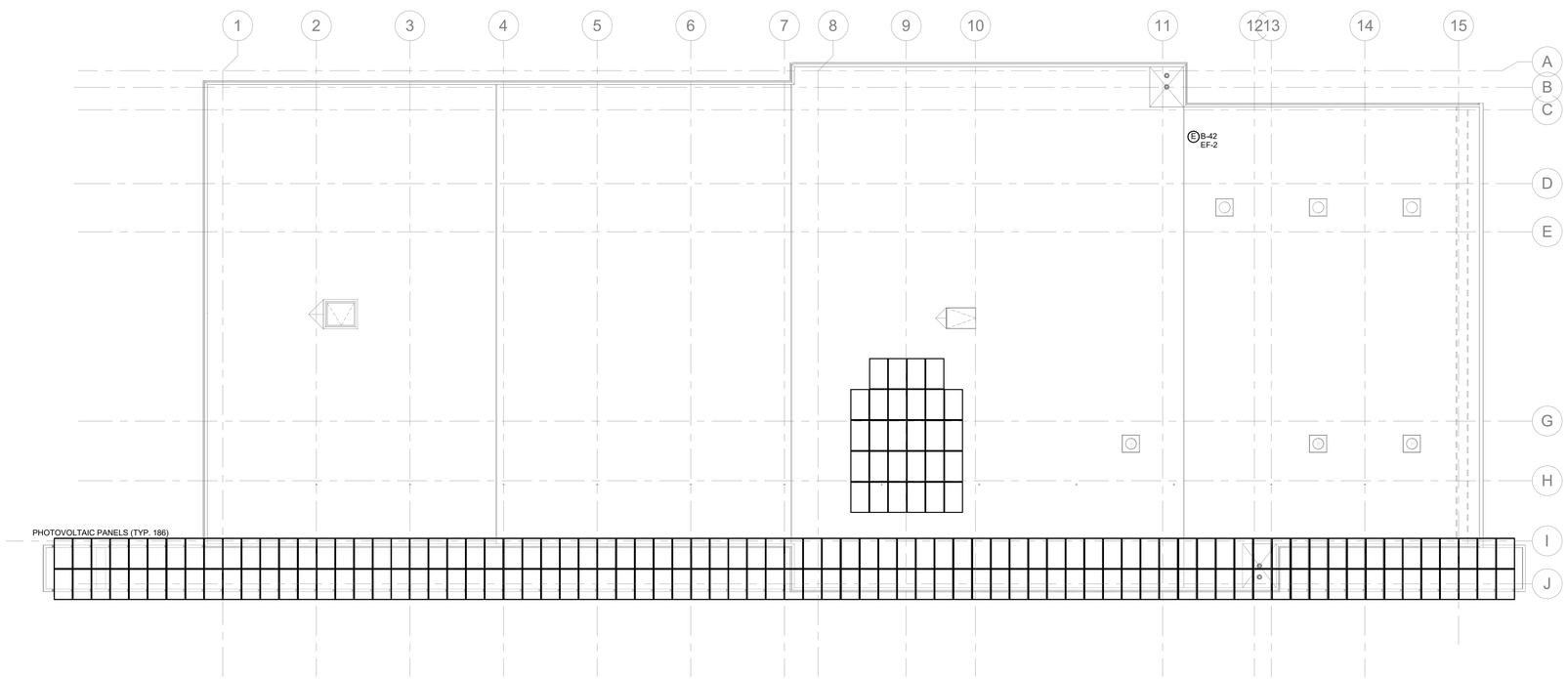

NORTH

1 ROOF PLAN - ELECTRICAL

3/32" = 1'-0"

OPN ARCHITECTS

301 N BROOM STREET #100
MADISON, WI 53703
608-819-0260 PHONE
www.opnarchitects.com
opn@opnarchitects.com

All reports, plans, specifications, computer files, field data, notes and other documents and instruments prepared by OPN Architects, Inc. as instruments of service shall remain the property of OPN Architects, Inc. OPN Architects, Inc. shall retain all common law, statutory and other reserved rights, including the copyright thereto.

© 2017 OPN Architects, Inc.

Owner

City of Madison Fire Department
314 W. Dayton St.
Madison, WI 53703

Project

Madison Fire Station 14
3201 Dairy Drive
Madison, WI 53718

Civil Engineer

Snyder & Associates, Inc
5010 Voges Rd
Madison WI, 53718
P. 608-838-0444

Structural Engineer

IMEG
1800 Deming Way #200
Middleton, WI 53562
P. 608-223-9600

Mechanical Engineer

IMEG
1800 Deming Way #200
Middleton, WI 53562
P. 608-223-9600

Electrical Engineer

IMEG
1800 Deming Way #200
Middleton, WI 53562
P. 608-223-9600

Key Plan

Sheet Issue Date

BID DOCUMENTS	11/03/17

Revision	Date

IMEG
1800 DEMING WAY, SUITE 200
MIDDLETON, WI 53562
608.223.9600 FAX: 608.836.0415
www.imegcorp.com
PROJECT # 17001140.00

IMEG CORP RESERVES PROPRIETARY RIGHTS, INCLUDING COPYRIGHTS, TO THIS DRAWING AND THE DATA SHOWN THEREON. SAID DRAWING AND/OR DATA ARE THE EXCLUSIVE PROPERTY OF IMEG CORP AND SHALL NOT BE USED OR REPRODUCED FOR ANY OTHER PROJECT WITHOUT THE EXPRESS WRITTEN APPROVAL AND PARTICIPATION OF IMEG CORP. © 2017 IMEG CORP.

REFERENCE SCALE IN INCHES

0 1 2 3

Drawing

ROOF PLAN - ELECTRICAL

City of Madison Contract No. **8027**
OPN Project No. **17207000**

E103

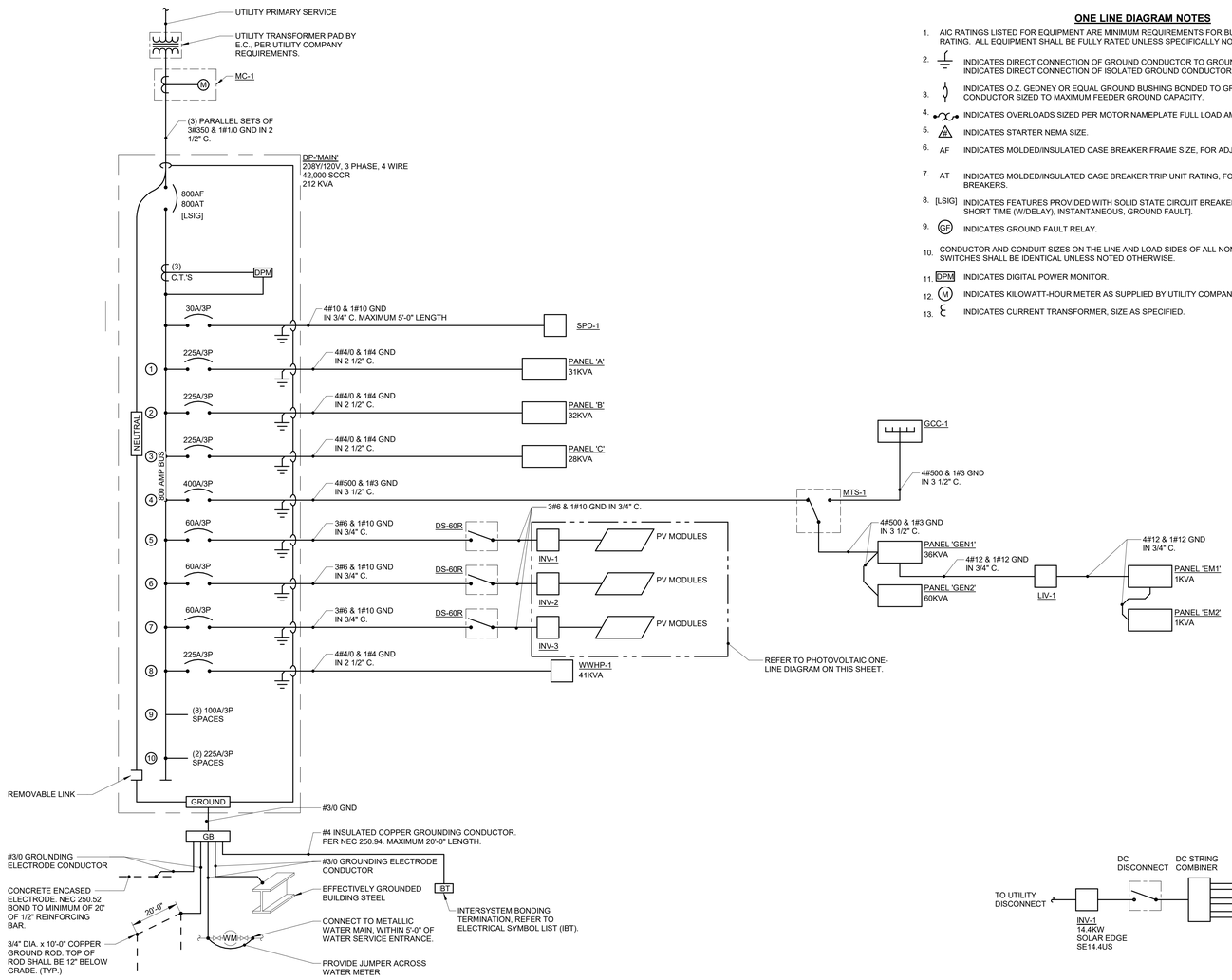

1 ONE-LINE DIAGRAM

NO SCALE

ONE LINE DIAGRAM NOTES

1. AIC RATINGS LISTED FOR EQUIPMENT ARE MINIMUM REQUIREMENTS FOR BUS BRACING AND DEVICE RATING. ALL EQUIPMENT SHALL BE FULLY RATED UNLESS SPECIFICALLY NOTED AS SERIES RATED.
2. INDICATES DIRECT CONNECTION OF GROUND CONDUCTOR TO GROUND BUS. SUBSCRIPT "I" INDICATES DIRECT CONNECTION OF ISOLATED GROUND CONDUCTOR TO ISOLATED GROUND BUS.
3. INDICATES O.Z. GEDNEY OR EQUAL GROUND BUSHING BONDED TO GROUND BUS WITH CONDUCTOR SIZED TO MAXIMUM FEEDER GROUND CAPACITY.
4. INDICATES OVERLOADS SIZED PER MOTOR NAMEPLATE FULL LOAD AMPERES.
5. INDICATES STARTER NEMA SIZE.
6. AF INDICATES MOLDED/INSULATED CASE BREAKER FRAME SIZE, FOR ADJUSTABLE TRIP BREAKERS.
7. AT INDICATES MOLDED/INSULATED CASE BREAKER TRIP UNIT RATING, FOR ADJUSTABLE TRIP BREAKERS.
8. [LSIG] INDICATES FEATURES PROVIDED WITH SOLID STATE CIRCUIT BREAKER. [LONG TIME (W/DELAY), SHORT TIME (W/DELAY), INSTANTANEOUS, GROUND FAULT].
9. GF INDICATES GROUND FAULT RELAY.
10. CONDUCTOR AND CONDUIT SIZES ON THE LINE AND LOAD SIDES OF ALL NON-FUSIBLE DISCONNECT SWITCHES SHALL BE IDENTICAL UNLESS NOTED OTHERWISE.
11. DPM INDICATES DIGITAL POWER MONITOR.
12. M INDICATES KILOWATT-HOUR METER AS SUPPLIED BY UTILITY COMPANY.
13. INDICATES CURRENT TRANSFORMER, SIZE AS SPECIFIED.

SHEET NOTES :

1. ALL WORK ASSOCIATED WITH THE PHOTOVOLTAIC SYSTEM SHALL BE INCLUDED UNDER ADD ALTERNATE #1.
2. PHOTOVOLTAIC SYSTEM BASIS OF DESIGN INCLUDES (3) SOLAR EDGE SE14.4US INVERTERS. PANEL QUANTITIES, ONE-LINE, AND LAYOUTS SHALL BE ADJUSTED BASED ON FINAL MANUFACTURER AND MODEL OF SYSTEM COMPONENTS. REFER TO SPECIFICAIONS FOR ADDITIONAL INFORMATION AND REQUIREMENTS.

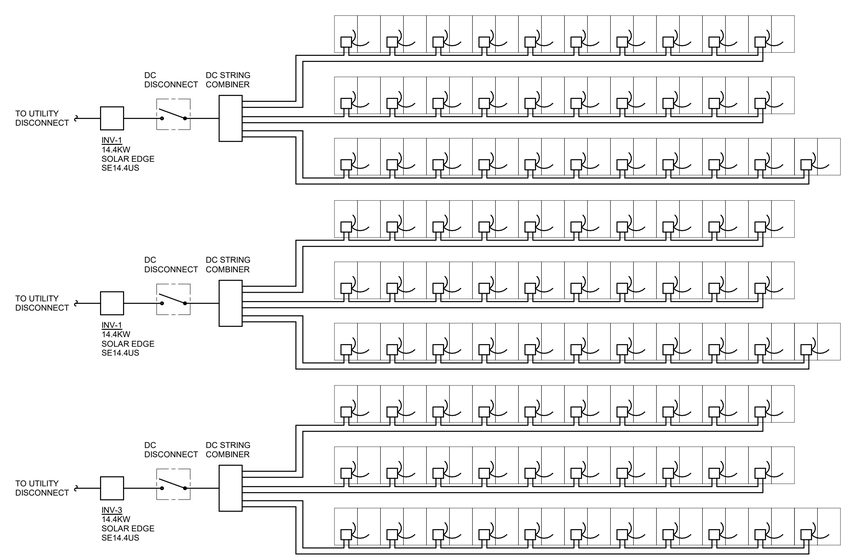

2 PHOTOVOLTAIC SYSTEM ONE-LINE DIAGRAM

NO SCALE

OPN ARCHITECTS
301 N BROOM STREET #100
MADISON, WI 53703
608-819-0260 PHONE
www.opnarchitects.com
opn@opnarchitects.com

All reports, plans, specifications, computer files, field data, notes and other documents and instruments prepared by OPN Architects, Inc. as instruments of service shall remain the property of OPN Architects, Inc. OPN Architects, Inc. shall retain all common law, statutory and other reserved rights, including the copyright thereto.

© 2017 OPN Architects, Inc.

Owner

City of Madison Fire Department
314 W. Dayton St.
Madison, WI 53703

Project

Madison Fire Station 14
3201 Dairy Drive
Madison, WI 53718

Civil Engineer

Snyder & Associates, Inc
5010 Voges Rd
Madison WI, 53718
P. 608-838-0444

Structural Engineer

IMEG
1800 Deming Way #200
Middleton, WI 53562
P. 608-223-9600

Mechanical Engineer

IMEG
1800 Deming Way #200
Middleton, WI 53562
P. 608-223-9600

Electrical Engineer

IMEG
1800 Deming Way #200
Middleton, WI 53562
P. 608-223-9600

Key Plan

Sheet Issue Date
BID DOCUMENTS 11/03/17

Revision Date

IMEG
1800 DEMING WAY, SUITE 200
MIDDLETON, WI 53562
608.223.9600 FAX: 608.836.0415
www.imegcorp.com
PROJECT # 170011400.00

IMEG CORP RESERVES PROPRIETARY RIGHTS, INCLUDING COPYRIGHTS, TO THIS DRAWING AND THE DATA SHOWN THEREON. SAID DRAWING AND/OR DATA ARE THE EXCLUSIVE PROPERTY OF IMEG CORP AND SHALL NOT BE USED OR REPRODUCED FOR ANY OTHER PROJECT WITHOUT THE EXPRESS WRITTEN APPROVAL AND PARTICIPATION OF IMEG CORP. © 2017 IMEG CORP.

REFERENCE SCALE IN INCHES
0 1 2 3

Drawing

ONE-LINE DIAGRAM - ELECTRICAL

City of Madison Contract No. **8027**
OPN Project No. **172070000**

E200

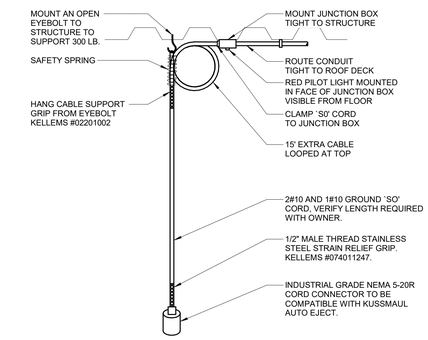

2 20A DROP CORD MOUNTING

NO SCALE

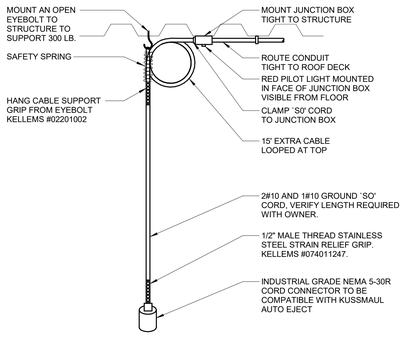

3 30A DROP CORD MOUNTING

NO SCALE

DISCONNECT AND STARTER SCHEDULE

NOTE: ALL DISCONNECTS (EXCEPT MANUAL STARTERS) SHALL BE HEAVY DUTY TYPE.

DISCONNECT TYPE:	REMARKS:	
FU - FUSED	SA - STANDARD ACCESSORIES (INCLUDES * ITEMS)	PF - PHASE FAILURE RELAY (5 HP OR GREATER)
NF - NON-FUSED	*CT - CONTROL TRANSFORMER, FUSED 120V	TO - MELTING THERMAL OVERLOADS
CB - CIRCUIT BREAKER	*EO - ELECTRONIC OVERLOAD	TS - 2 SPEED SELECTOR SWITCH IN DOOR
	*HA - HAND-OFF-AUTO IN DOOR	GP - GREEN (OFF) PILOT LIGHT IN DOOR
STARTER TYPE:	*RP - RED PILOT LIGHT IN DOOR	FA - 4-CONVERTIBLE AUXILIARY CONTACTS
FV - FULL VOLTAGE	*TA - TWO CONVERTIBLE AUXILIARY CONTACTS	EI - ELECTRICAL INTERLOCK (2)-N.O. & (2)-N.C.
YD - WYE - DELTA	S/N - INSULATED NEUTRAL ASSEMBLY	SS - START-STOP PUSHBUTTON IN DOOR
RE - REVERSING	EI - ELECTRICAL INTERLOCK WITH CONTACTS	HL - HANDLE PADLOCK HASP
TW - 2 SPEED, 2 WINDING		
SW - 2 SPEED, 1 WINDING		
RV - REDUCED VOLTAGE AUTOXFMR		
SS - SOLID STATE		
MS - MANUAL STARTER		
MX - MANUAL SWITCH		
FS - FUSED SWITCH		

ITEM	DISCONNECT TYPE & RATING		CIRCUIT VOLTAGE	POLES	STARTER		NEMA ENCLOSURE	REMARKS	APPROVED MANUFACTURERS
	TYPE	RATING			NEMA SIZE	TYPE			
DS-60	NF	60 A	480 V	3			1		SQUARE D 3110 HU362
DS-60X	NF	60 A	600 V	3			4X	EI	SQUARE D 3110 HU362DSEI
DS-100	NF	100 A	480 V	3			1		SQUARE D 3110 HU363
DS-200	NF	200 A	480 V	3			1		SQUARE D 3110 HU364
MX-1		30 A	120 V	2	0	MX	1	HL	SQUARE D 2510 KG1

TRANSFER SWITCH SCHEDULE

SWITCH TYPE:	ACCESSORIES: (ACC)
AUTO - AUTOMATIC	EE - ENGINE EXERCISER
B/I - AUTOMATIC WITH BYPASS ISOLATION	IM - IN-PHASE MONITOR
MAN - MANUAL OPERATION	SH - STRIP HEATER WITH THERMOSTAT
CT - CLOSED TRANSITION	RM - REMOTE ANNUNCIATOR
DT - DELAY TRANSITION - CENTER OFF	RC - REMOTE CONTROL CIRCUITS
STAT - STATIC SOLID STATE	EL - ELEVATOR EMERGENCY TO NORMAL PRESIGNAL
/30 - 30 CYCLE WITHSTAND RATING	SP - SERIAL COMMUNICATIONS PORT
SN - SWITCHED NEUTRAL	PM - POWER MONITORING METER
ON - OVERLAPPING SWITCHED NEUTRAL	RTC - REMOTE TRANSFER CONTROL FROM FIRE COMMAND CENTER
DN - SOLID NEUTRAL	RMC - REMOTE ANNUNCIATION AT FIRE COMMAND CENTER
	TI - TRANSFER INHIBIT
	LS - LOAD SHED

ITEM	SWITCH				NEMA ENCLOSURE TYPE	ACC	REMARKS	APPROVED MANUFACTURERS
	TYPE	VOLTAGE	POLES	AMPS				
MTS-1	MAN	208 V	3	400 A	1			ASCO 300 SERIES RUSSEL ELECTRIC RMT SERIES GE ZENITH ZTG SERIES CATERPILLAR CTG SERIES CUMMINS OTPC SERIES GENRAC W SERIES KOHLER KCS SERIES KOHLER KCT SERIES

SYSTEM INPUTS \ SEQUENCE OF OPERATION		PANEL/ANNUNCIATOR ALARM INDICATION	PANEL/ANNUNCIATOR SUPERVISORY INDICATION	PANEL/ANNUNCIATOR TROUBLE INDICATION	AUDIBLE ALARMS SEQUENCE	VISUAL ALARMS SEQUENCE	ELECTRIC SPRINKLER BELL SEQUENCE	SPRINKLER PREACTION ACTIVATION SEQUENCE	SOUND MASKING/ PAGING SYSTEMS SHUTDOWN SEQUENCE	CEILING FAN SHUTDOWN SEQUENCE	AHU SHUTDOWN SEQUENCE
							AR	AR	AR	AR	AR
FIRE ALARM PANEL, TRANSPONDER, NAC PANEL LOW BATTERY			X								
FIRE ALARM PANEL, TRANSPONDER, NAC PANEL BATTERY OR CHARGER FAILURE				X							
FIRE ALARM PANEL, TRANSPONDER, NAC PANEL ABNORMAL SWITCH OR CONTROL POSITION.			X								
FIRE ALARM PANEL, TRANSPONDER, NAC PANEL GROUND FAULT, OPEN CIRCUIT, SHORT CIRCUIT				X							
FIRE ALARM PANEL, TRANSPONDER, NAC PANEL AC POWER LOSS OR IRREGULARITY				X							
NOTIFICATION APPLIANCE CIRCUIT OR SLC LOOP GROUND FAULT, OPEN CIRCUIT, SHORT CIRCUIT				X							
INITIATING DEVICE FAILURE OR COMMUNICATION ERROR				X							
FIRE ALARM PANEL MANUAL FIRE DRILL			X		X	X			X		
MANUAL PULL STATION	FT F	X			X	X			X		
SMOKE DETECTOR	SD	X			X	X			X		
SMOKE DETECTOR FOR HVAC CONTROL	SD SD D	?	X	?	?	?					X
HEAT DETECTOR	H HF HX	X			X	X			X		
SPRINKLER SYSTEM FLOW SWITCH	FS MM	X			X	X	X	X	X	X	
SPRINKLER SYSTEM MONITOR SWITCH	PIV MS MM		X								
SPRINKLER SYSTEM CABINET MONITOR	MS MM		X								
KITCHEN HOOD SUPPRESSION SYSTEM ACTIVATION	MM		X	X							

NOTES :

1. ALL SYSTEM EVENTS SHALL BE LOGGED, PRINTED, AND DISPLAYED ON THE GRAPHICAL INTERFACE, IF APPLICABLE. SEE SPECIFICATIONS FOR MORE INFORMATION AND DESCRIPTIONS OF SEQUENCES OF OPERATION.

1 FIRE ALARM OPERATION MATRIX

NO SCALE

LUMINAIRE SCHEDULE

(MTG) MOUNTING:	(TYPE) LAMP TECHNOLOGY:	(L/L) LENS / LOUVER:
RE - RECESSED	FL - FLUORESCENT	A - .125 ACRYLIC
SP - SUSPENDED	CF - COMPACT FLUORESCENT	B - BLACK BAFFLE
CL - CEILING SURFACE	HL - HALOGEN	C - CLEAR ALZAK
WL - WALL	IN - INCANDESCENT	D - PARABOLIC
UC - UNDER CABINET	LED - LIGHT EMITTING DIODE	F - FRESNEL
CV - COVE	HS - HIGH PRESSURE SODIUM	G - TEMPERED GLASS
PL - POLE	MH - METAL HALIDE	H - WALL WASHER
FR - FLANGED RECESSED	SMH - SUPER METAL HALIDE	P - POLYCARBONATE
O - OTHER (SEE DESCRIPTION)	PSMH - PULSE START METAL HALIDE	K - KSH12 .125" ACRYLIC
	CMH - CERAMIC METAL HALIDE	K19 - KSH19 .156" ACRYLIC
DOOR:	O - OTHER (SEE DESCRIPTION	L - LOW IRIDESCENT SPECULAR ALUM.
FA - FLAT ALUMINUM	XL - EXTENDED LIFE	N - NONE
FS - FLAT STEEL	XLP - EXTENDED LIFE & OUTPUT	R - HIGH IMPACT OR ACRYLIC
RA - REGRESSED ALUMINUM		O - OTHER (SEE DESCRIPTION)
RS - REGRESSED STEEL		
	(TYPE) BALLAST:	**(TYPE) BALLAST:**
FINISH:	DIM07 - LINE DIMMING BALLAST	EB - ELECTRONIC BALLAST
PAF - PAINT AFTER FABRICATION	DIM10 - 0-10V DIMMING BALLAST	EM - EMERGENCY BATTERY / BALLAST
CSA - FINISH SELECTION BY ARCHITECT	HL - HIGH / LOW LEVEL BALLAST	DALI - DIGITAL DIMMING BALLAST
	ML - MULTI-LEVEL SWITCHING	MV - MULTI-VOLTAGE ELECTRONIC 120V-277V
	HP - HIGH PERFORMANCE / LBF	PRS - ELECTRONIC PROGRAM RAPID START BALLAST

CATALOG NUMBER SHALL NOT BE CONSIDERED COMPLETE AND MATERIAL SHALL NOT BE ORDERED BY MANUFACTURER AND CATALOG NUMBER ONLY. THE COMPLETE DESCRIPTION AND THE SPECIFICATION SHALL BE COORDINATED WITH THE CATALOG NUMBER TO DETERMINE THE EXACT MATERIAL AND ACCESSORIES TO BE ORDERED. THE FIRST MANUFACTURER LISTED IS THE BASIS FOR DESIGN.

REFER TO SPECIFICATION SECTIONS LIGHTING 26 51 00 AND EMERGENCY LIGHTING 26 52 00 FOR ADDITIONAL INFORMATION AND REQUIREMENTS.

ALL LAMPS FOR THIS PROJECT SHALL BE FURNISHED AND INSTALLED BY THE ELECTRICAL CONTRACTOR UNLESS OTHERWISE NOTED.
LAMP CORRELATED COLOR TEMPERATURE 4000°K, COLOR RENDERING INDEX (CRI) AT OR ABOVE 80, UNLESS NOTED OTHERWISE.

FINAL FIXTURE COLOR SELECTIONS TO BE CONFIRMED WITH ARCHITECT.

ITEM	DESCRIPTION	DIMENSIONS				MTG	LAMPS			BALLAST		L/L	APPROVED MANUFACTURER
		L	W	H	DIA.		TYPE	QTY	MODEL	VOLTS	TYPE		
F1	8' INDUSTRIAL WITH NO UPLIGHT, BAKED ENAMEL FINISH.	8'-0"	1'-0"	4 1/4"		SP @ 20'	LED	1	18000 LUMENS 148 WATTS	120 V	DIM10	N	METALUX 8 ILED LD4 18 W WG 277 L835 CD
F2	4' INDUSTRIAL WITH NO UPLIGHT, BAKED ENAMEL FINISH.	4'-0"	1'-0"	4 1/4"		SP @ 9'	LED	1	7000 LUMENS 57 WATTS	120 V	DIM10	A	METALUX 4 ILED LD4 7 W FL 120 L835 CD
F3	RECESSED INDIRECT/DIRECT, PERFORATED METAL LAMP SHIELD WITH ACRYLIC DIFFUSER.	2'-0"	2'-0"	5 19/64"		RE	LED	1	4200 LUMENS 41 WATTS	120 V	DIM10	A	LITHONIA 2VTL 40L ADP EZB LP835 METALUX FINELITE
F4	RECESSED INDIRECT/DIRECT, PERFORATED METAL LAMP SHIELD WITH ACRYLIC DIFFUSER.	2'-0"	2'-0"	5 19/64"		RE	LED	1	2200 LUMENS 20 WATTS	120 V	DIM10	A	LITHONIA 2VTL 20L ADP EZB LP835 METALUX FINELITE
F4E	RECESSED INDIRECT/DIRECT, PERFORATED METAL LAMP SHIELD WITH ACRYLIC DIFFUSER. PROVIDE WITH UL924 EMERGENCY TRANSFER DEVICE.	2'-0"	2'-0"	5 19/64"		RE	LED	1	2200 LUMENS 20 WATTS	120 V	DIM10	A	LITHONIA 2VTL 20L ADP EZB LP835 METALUX FINELITE
F5	OPEN RECESSED DOWNLIGHT, CLEAR SPECULAR PARABOLIC SELF TRIMMING REFLECTOR, DAMP LABEL. RELISTED FOR A 100W INCANDESCENT EQUIVALENT A21 LED BULB, PROVIDE WITH DIMMABLE A21 LED BULB.			9 1/2"	6"	RE	LED	1	1600 LUMENS 15 WATTS	120 V	DIM07	D	PORTFOLIO HD6-6701 C PRESCOLITE 1224-ST362 GOTHAM RP6 AC
F5E	OPEN RECESSED DOWNLIGHT, CLEAR SPECULAR PARABOLIC SELF TRIMMING REFLECTOR, DAMP LABEL. RELISTED FOR A 100W INCANDESCENT EQUIVALENT A21 LED BULB. PROVIDE WITH DIMMABLE A21 LED BULB. PROVIDE WITH UL 924 EMERGENCY TRANSFER DEVICE.			9 1/2"	6"	RE	LED	1	1600 LUMENS 15 WATTS	120 V	DIM07	D	PORTFOLIO HD6-6701 C PRESCOLITE 1224-ST362 GOTHAM RP6 AC
F6	3' WALL BRACKET WITH ANGLED CURVED FASCIA WITH A SOLID LENS DIFFUSER, WHITE STEEL HOUSING.	3'-0"	3 1/2"	7 1/2"		WL@ 8'	LED	1	2700 LUMENS 37 WATTS	120 V	DIM10	A	FINELITE S17-LED ACF SF 3 S 8 35 120 SC
F7	4' NARROW SUSPENDED INDIRECT/DIRECT LINEAR	4'-0"	4"	4"		SP @ 12'	LED	1	3600 LUMENS 33 WATTS	120 V	DIM10	O	FINELITE HP-4 ID S B 8 35 TG BG 120 FA SC
F7E	4' NARROW SUSPENDED INDIRECT/DIRECT LINEAR. PROVIDE WITH UL924 EMERGENCY TRANSFER DEVICE	4'-0"	4"	4"		SP @ 9'	LED	1	3600 LUMENS 33 WATTS	120 V	DIM10	O	FINELITE HP-4 ID S B 8 35 TG BG 120 FA SC
F8	4' NARROW RECESSED CHANNEL STRIP	4'-0"	4"	4"		RE	LED	1	1900 LUMENS 18 WATTS	120 V	DIM10	O	FINELITE HP-4 R 4 B 835 F 120 SC
F9	4' WALL BRACKET WITH A SOLID LENS DIFFUSER, WHITE STEEL HOUSING.	4'-0"	3 1/2"	7 1/2"		WL@ 8'	LED	1	5000 LUMENS 49 WATTS	120 V	DIM10	A	KENALL MLHA12 48 R MW CP 45L35K DC 120
F10	HEAVY, WALL MOUNTED EXTERIOR LUMINAIRE. DIE-CAST ALUMINUM GASKETED HOUSING WITH SIDE HINGED FACEPLATE AND BLACK POWDER COAT FINISH. TWO LED DRIVERS.	1'-4"	8"	8"		WL @12'	LED	1	2700 LUMENS 25 WATTS	120 V		O	EATON ENC E01 LED E1 BL3 BZ
F11	LED STEPLIGHT. 18 GUAGE POWDER COATED STAINLESS STEEL HOUSING. CLEAR ACRYLIC LENS. GLOSS WHITE FINISH. SLOTTED FACEPLAT.	2 1/2"	4 9/32"	1'-2"		WL @ 18"	LED	1	0.85 WATTS 24 LUMENS	120 V		O	KENALL MSL S 0 GW T WHL 120 3
F12	WET LOCATION LISTED, HOODED, DIRECT VIEW, LED, RED/GREEN SIGN.	1'-0"	6"	2 1/2"		WL @ 12'	LED	1	L.E.D.	120 V		O	SIGNAL-TECH 5439 TCL147RG-225H
F13	OPEN RECESSED DOWNLIGHT, CLEAR SPECULAR PARABOLIC SELF TRIMMING REFLECTOR, DAMP LABEL. RELISTED FOR A 100W INCANDESCENT EQUIVALENT A21 LED BULB. PROVIDE WITH A19 LED BULB.			9 1/2"	6"	RE	LED	1	1000 LUMENS 10 WATTS	120 V	DIM10	D	PORTFOLIO HD6-6701 C PRESCOLITE 1224-ST362 GOTHAM RP6 AC
F14	OPEN RECESSED DOWNLIGHT, CLEAR SPECULAR PARABOLIC SELF TRIMMING REFLECTOR, WET LOCATION LISTED.			9 1/2"	6"	RE	LED	1	500 LUMENS 6 WATTS	120 V	DIM10	D	LITHONIA LDN6 35 05 L06 AR LS MVOLT WL
F15	WALL-MOUNTED LINEAR ASYMMETRIC LED FIXTURE WITH ALUMINUM HOUSING WITH ADJUSTABLE, LOCKABLE MOUNTING ARMS WITH POWDER COATED FINISH SELECTED BY ARCHITECT.	8'-0"			6"	WL@ 8'	LED	1	8000 LUMENS 82 WATTS	120 V		A	AMETRIX A08 SI A 1 LED 35K UNV AK
S1	SITE LUMINAIRE, ALUMINIUM EXTRUDED HOUSING GASKETED, TEMPERED GLASS LENS, TYPE BLC DISTRIBUTION, BLACK, LISTED WET LOCATION. IN-LINE FUSE(S) SQUARE STRAIGHT ALUMINUM POLE, 20', EMBEDDED BASE.	1'-8"	1'-3"	5 1/2"		PL	LED	1	7800 LUMENS 91 WATTS	120 V	DIM10	O	CREE OSQ A NM 2ME B 40K UL BK OSQAABK OSQBLSMF
S2	SITE LUMINAIRE, ALUMINIUM EXTRUDED HOUSING GASKETED, TEMPERED GLASS LENS, TYPE V DISTRIBUTION, BLACK, LISTED WET LOCATION. IN-LINE FUSE(S) SQUARE STRAIGHT ALUMINUM POLE, 20', EMBEDDED BASE.	1'-8"	1'-3"	5 1/2"		PL	LED	1	10900 LUMENS 91 WATTS	120 V	DIM10	O	CREE OSQ A NM 5ME B 40K UL BK OSQAA DSX0 40C 700 40K T5M 120 SPA DDBXD
S3	SITE BOLLARD WITH EMBEDDED BASE AND SQUARE, ALUMINUM POLE. BLACK, MOUNTED TO AIM PERPENDICULAR TO PATH.			4'-0"	7"	PL	LED	1	1100 LUMENS 10 WATTS	120 V		O	BEGA 88659 K4 70895
S4	FLOOD LIGHT, KNUCKLE MOUNTED, ALUMINUM HOUSING, POWDER COAT FINISH, GASKETED. 2H X 2V BEAM SPREAD, BLACK FINISH.	8"	4"	6"		O	LED	1	800 LUMENS 29 WATTS	120 V		O	LITHONIA OLBS
X1	SINGLE-FACE EXIT SIGN, WHITE THERMOPLASTIC BODY, RED LETTERS, UNIVERSAL ARROWS/MOUNTING.	1'-1"	2"	9"		CL/W L@8'	LED	1	L.E.D.	120 V		O	DUAL-LITE LXU LITHONIA LQMS 1 EL MCPHILBEN CXXL
X2	DOUBLE-FACE EXIT SIGN, WHITE THERMOPLASTIC BODY, RED LETTERS, UNIVERSAL ARROWS/MOUNTING.	1'-1"	2"	9"		CL/W L@8'	LED	1	L.E.D.	120 V		O	DUAL-LITE LXU LITHONIA LQMS 3 EL MCPHILBEN CXXL3

OPN ARCHITECTS
301 N BROOM STREET #100
MADISON, WI 53703
608-819-0260 PHONE
www.opnarchitects.com
opn@opnarchitects.com

All reports, plans, specifications, computer files, field data, notes and other documents and instruments prepared by OPN Architects, Inc. as instruments of service shall remain the property of OPN Architects, Inc. OPN Architects, Inc. shall retain all common law, statutory and other reserved rights, including the copyright thereto.

© 2017 OPN Architects, Inc.

Owner
City of Madison Fire Department
314 W. Dayton St.
Madison, WI 53703

Project
Madison Fire Station 14
3201 Dairy Drive
Madison, WI 53718

Civil Engineer
Snyder & Associates, Inc
5010 Voges Rd
Madison WI, 53718
P. 608-838-0444

Structural Engineer
IMEG
1800 Deming Way #200
Middleton, WI 53562
P. 608-223-9600

Mechanical Engineer
IMEG
1800 Deming Way #200
Middleton, WI 53562
P. 608-223-9600

Electrical Engineer
IMEG
1800 Deming Way #200
Middleton, WI 53562
P. 608-223-9600

Key Plan

Sheet Issue Date	
BID DOCUMENTS	11/03/17

Revision	Date

IMEG
1800 DEMING WAY, SUITE 200
MIDDLETON, WI 53562
608.223.9600 FAX: 608.836.0415
www.imegcorp.com
PROJECT # 17001140.00

IMEG CORP RESERVES PROPRIETARY RIGHTS, INCLUDING COPYRIGHTS, TO THIS DRAWING AND THE DATA SHOWN THEREON. SAID DRAWING AND/OR DATA ARE THE EXCLUSIVE PROPERTY OF IMEG CORP AND SHALL NOT BE USED OR REPRODUCED FOR ANY OTHER PROJECT WITHOUT THE EXPRESS WRITTEN APPROVAL AND PARTICIPATION OF IMEG CORP. © 2017 IMEG CORP.

REFERENCE SCALE IN INCHES
0 1 2 3

Drawing
DETAILS AND SCHEDULES - ELECTRICAL

City of Madison Contract No. **8027**
OPN Project No. **17207000**

E300

PANEL NAME: A

TYPE: BOLT-ON
MOUNTING: SURFACE
FED FROM: DP-MAIN
SCCR: 35,000
LOCATION: ELECTRICAL & COMPRESSOR 112

SOLID NEUTRAL
GROUND BUS

CONNECTED 36.4 kVA
MAIN: 225 A/MLO
VOLTS: 120/208 Wye
PHASE: 3
WIRE: 4
DEMAND: 34.1 kVA

Panel Notes:

CKT NO.	LOAD DESCRIPTION	OVERCURRENT PROTECTION AMPS	P	A		B		C		OVERCURRENT PROTECTION P	AMPS	LOAD DESCRIPTION	CKT NO.
A-1	COMPRESSOR, 4#3 & 1#8 GND	100 A	3	5	0.67					1	20 A	Lighting	A-2
A-3	--	--	--			5	0.02			1	20 A	Lighting	A-4
A-5	--	--	--					5	0.2	1	20 A	SMOKE HATCH	A-6
A-7	EWC *G	20 A	1	0.5	0.54					1	20 A	Receptacles	A-8
A-9	WS-1	20 A	1			0	0.72			1	20 A	Receptacles	A-10
A-11	Receptacles	20 A	1					0.9	0.9	1	20 A	Receptacles	A-12
A-13	Receptacles	20 A	1	0.72	1					1	20 A	FIRE ENGINE CORD	A-14
A-15	FIRE ENGINE CORD	20 A	1			1	0			1	20 A	FIRE ENGINE CORD	A-16
A-17	CF-1	20 A	1					1.34	1.34	1	20 A	CF-1	A-18
A-19	DOOR	20 A	1	1.6	1.6					1	20 A	DOOR	A-20
A-21	ICEMAKER	20 A	1			0.18	2.8			2	50 A	DRYER, 3#10 & 1#10 GND	A-22
A-23	GEAR DRYER	20 A	1					1.6	2.8	--	--	--	A-24
A-25	Lighting	20 A	1	0	1					1	20 A	WASHER	A-26
A-27	SPARE	20 A	1			0	0			1	20 A	SPARE	A-28
A-29	SPARE	20 A	1					0	0	1	20 A	SPARE	A-30
A-31	SPARE	20 A	1	0	0					1	20 A	SPARE	A-32
A-33	SPARE	20 A	1			0	0			1	20 A	SPARE	A-34
A-35	SPARE	20 A	1					0	0	--	--	SPACE	A-36
A-37	SPARE	20 A	1	0	0					--	--	SPACE	A-38
A-39	SPACE	--	--			0	0			--	--	SPACE	A-40
A-41	SPACE	--	--					0	0	--	--	SPACE	A-42
			Total Load:	12.63 kVA		9.72 kVA		14.08 kVA					
			Total Amps:	108.95		81.01		121.06					

Key*: *G = GFCI BREAKER, *10 = #10 WIRE

PANEL NAME: GEN1

TYPE: BOLT-ON
MOUNTING: SURFACE
FED FROM: MTS-1
SCCR: 30,000
LOCATION: ELECTRICAL & COMPRESSOR 112

SOLID NEUTRAL
GROUND BUS

CONNECTED 37.8 kVA
MAIN: 400 A/MCB
VOLTS: 120/208 Wye
PHASE: 3
WIRE: 4
DEMAND: 37.78 kVA

Panel Notes: FEED THRU LUGS

CKT NO.	LOAD DESCRIPTION	OVERCURRENT PROTECTION AMPS	P	A		B		C		OVERCURRENT PROTECTION P	AMPS	LOAD DESCRIPTION	CKT NO.
GEN1-1	Lighting	20 A	1	0.23	0.36					1	20 A	Receptacles	GEN1-2
GEN1-3	LADDER CORD	20 A	1			1	1.6			1	20 A	DOOR	GEN1-4
GEN1-5	FIRE ENGINE CORD	20 A	1					1	2	1	30 A	AMBULANCE CORD, *10	GEN1-6
GEN1-7	DOOR	20 A	1	1.6	1.6					1	20 A	DOOR	GEN1-8
GEN1-9	DOOR	20 A	1			1.6	1.6			1	20 A	DOOR	GEN1-10
GEN1-11	DOOR	20 A	1					1.6	0.18	1	20 A	Lighting	GEN1-12
GEN1-13	LAUNDRY EXTRACTOR, 4#6 & 1#10 GND	50 A	3	4	1.13					1	20 A	UH-1	GEN1-14
GEN1-15	--	--	--			4	0.9			3	20 A	EF-1	GEN1-16
GEN1-17	--	--	--					4	0.9	--	--	--	GEN1-18
GEN1-19	Lighting	20 A	1	1.71	0.9					--	--	--	GEN1-20
GEN1-21	Lighting	20 A	1			1.93	1.26			1	20 A	Receptacles	GEN1-22
GEN1-23	Power	20 A	1					0.67	0.67	3	20 A	LIV-1	GEN1-24
GEN1-25	SPARE	20 A	1	0	0.67					--	--	--	GEN1-26
GEN1-27	SPARE	20 A	1			0	0.67			--	--	--	GEN1-28
GEN1-29	SPARE	20 A	1					0	0	1	20 A	SPARE	GEN1-30
GEN1-31	SPARE	20 A	1	0	0					1	20 A	SPARE	GEN1-32
GEN1-33	SPARE	20 A	1			0	0			1	20 A	SPARE	GEN1-34
GEN1-35	SPACE	--	--					0	0	--	--	SPACE	GEN1-36
GEN1-37	SPACE	--	--	0	0					--	--	SPACE	GEN1-38
GEN1-39	SPACE	--	--			0	0			--	--	SPACE	GEN1-40
GEN1-41	SPACE	--	--					0	0	--	--	SPACE	GEN1-42
			Total Load:	12.2 kVA		14.56 kVA		11.02 kVA					
			Total Amps:	103.16		122.85		91.82					

Key*: *10 = #10 WIRE

PANEL NAME: EM1

TYPE: FUSIBLE
MOUNTING: SURFACE
FED FROM: LIV-1
SCCR: 10,000
LOCATION: ELECTRICAL & COMPRESSOR 112

SOLID NEUTRAL
GROUND BUS

CONNECTED 0.9 kVA
MAIN: 100 A/FUSIBLE SWITCH
VOLTS: 120/208 Wye
PHASE: 3
WIRE: 4
DEMAND: 0.85 kVA

Panel Notes: FEED THRU LUGS

CKT NO.	LOAD DESCRIPTION	OVERCURRENT PROTECTION AMPS	P	A		B		C		OVERCURRENT PROTECTION P	AMPS	LOAD DESCRIPTION	CKT NO.
EM1-1	Lighting	20 A	1	0.74	0					1	20 A	FAP - Fire Alarm Control Panel *F	EM1-2
EM1-3	Lighting	20 A	1			0.06	0.05			1	20 A	EB	EM1-4
EM1-5	SPARE	20 A	1					0	0	1	20 A	SPARE	EM1-6
EM1-7	SPARE	20 A	1	0	0					1	20 A	SPARE	EM1-8
EM1-9	SPACE	--	--			0	0			--	--	SPACE	EM1-10
EM1-11	SPACE	--	--					0	0	--	--	SPACE	EM1-12
EM1-13	SPACE	--	--	0	0					--	--	SPACE	EM1-14
EM1-15	SPACE	--	--			0	0			--	--	SPACE	EM1-16
EM1-17	SPACE	--	--					0	0	--	--	SPACE	EM1-18
			Total Load:	0.74 kVA		0.11 kVA		0 kVA					
			Total Amps:	6.31		1.06		0					

Key*: *F=FIRE ALARM SYSTEM REQUIRES RED HANDLE AND LOCK

PANEL NAME: EM2

TYPE: FUSIBLE
MOUNTING: SURFACE
FED FROM: EM1
SCCR: 10,000
LOCATION: MEZZANINE

SOLID NEUTRAL
GROUND BUS

CONNECTED 1 kVA
MAIN: 100 A/MLO
VOLTS: 120/208 Wye
PHASE: 3
WIRE: 4
DEMAND: 1.04 kVA

Panel Notes:

CKT NO.	LOAD DESCRIPTION	OVERCURRENT PROTECTION AMPS	P	A		B		C		OVERCURRENT PROTECTION P	AMPS	LOAD DESCRIPTION	CKT NO.
EM2-1	Lighting	20 A	1	0.32	0.21					1	20 A	Lighting	EM2-2
EM2-3	FIRE SUPPRESSION *F	20 A	1			0.5	0			1	20 A	SPARE	EM2-4
EM2-5	SPARE	20 A	1					0	0	1	20 A	SPARE	EM2-6
EM2-7	SPARE	20 A	1	0	0					1	20 A	SPARE	EM2-8
EM2-9	SPACE	--	--			0	0			--	--	SPACE	EM2-10
EM2-11	SPACE	--	--					0	0	--	--	SPACE	EM2-12
EM2-13	SPACE	--	--	0	0					--	--	SPACE	EM2-14
EM2-15	SPACE	--	--			0	0			--	--	SPACE	EM2-16
EM2-17	SPACE	--	--					0	0	--	--	SPACE	EM2-18
			Total Load:	0.54 kVA		0.5 kVA		0 kVA					
			Total Amps:	5.11		4.81		0					

Key*:

PANEL NAME: GEN2

TYPE: BOLT-ON
MOUNTING: SURFACE
FED FROM: GEN1
SCCR: 10,000
LOCATION: MEZZANINE

SOLID NEUTRAL
GROUND BUS

CONNECTED 59.9 kVA
MAIN: 400 A/MCB
VOLTS: 120/208 Wye
PHASE: 3
WIRE: 4
DEMAND: 59.89 kVA

Panel Notes:

CKT NO.	LOAD DESCRIPTION	OVERCURRENT PROTECTION AMPS	P	A		B		C		OVERCURRENT PROTECTION P	AMPS	LOAD DESCRIPTION	CKT NO.
GEN2-1	CP-1	20 A	1	1.66	0.67					1	20 A	WH-1	GEN2-2
GEN2-3	Lighting	20 A	1			1.76	1.83			1	20 A	Lighting	GEN2-4
GEN2-5	Lighting	20 A	1					1.27	1.32	1	20 A	Lighting	GEN2-6
GEN2-7	DDC PANELS	20 A	1	1	0.83					1	20 A	AHU-1 ERW	GEN2-8
GEN2-9	Receptacles	20 A	1			0.2	0.54			1	20 A	Receptacles	GEN2-10
GEN2-11	Receptacles	20 A	1					1.08	0.72	1	20 A	Receptacles	GEN2-12
GEN2-13	Receptacles	20 A	1	0.72	1.08					1	20 A	Receptacles	GEN2-14
GEN2-15	Receptacles	20 A	1			0.72	0.36			1	20 A	Receptacles	GEN2-16
GEN2-17	Receptacles	20 A	1					0.54	2.03	3	35 A	MAU-1, 3#10 & 1#10 GND	GEN2-18
GEN2-19	P-1	20 A	3	1.27	2.03					--	--	--	GEN2-20
GEN2-21	--	--	--			1.27	2.03			--	--	--	GEN2-22
GEN2-23	--	--	--					1.27	2.93	3	50 A	AHU-1 SUPPLY, 3#8 & 1#10 GND.	GEN2-24
GEN2-25	AHU-1 RETURN	20 A	3	1.27	2.93					--	--	--	GEN2-26
GEN2-27	--	--	--			1.27	2.93			--	--	--	GEN2-28
GEN2-29	--	--	--					1.27	0.2	1	20 A	AHU-1 LIGHTS & RECEPTACLES	GEN2-30
GEN2-31	AHU-1 EXHAUST	20 A	3	0.8	0.83					1	20 A	B-1	GEN2-32
GEN2-33	--	--	--			0.8	5.77			3	100 A	HP-2, 3#2 & 1#6 GND	GEN2-34
GEN2-35	--	--	--					0.8	5.77	--	--	--	GEN2-36
GEN2-37	Receptacles	20 A	1	0.36	5.77					--	--	--	GEN2-38
GEN2-39	SPARE	20 A	1			0	0			1	20 A	SPARE	GEN2-40
GEN2-41	SPARE	20 A	1					0	0	1	20 A	SPARE	GEN2-42
GEN2-43	SPARE	20 A	1	0	0					1	20 A	SPARE	GEN2-44
GEN2-45	SPARE	20 A	1			0	0			1	20 A	SPARE	GEN2-46
GEN2-47	SPACE	--	--					0	0	--	--	SPACE	GEN2-48
GEN2-49	SPACE	--	--	0	0					--	--	SPACE	GEN2-50
GEN2-51	SPACE	--	--			0	0			--	--	SPACE	GEN2-52
GEN2-53	SPACE	--	--					0	0	--	--	SPACE	GEN2-54
			Total Load:	21.22 kVA		19.48 kVA		19.2 kVA					
			Total Amps:	177.17		162.71		159.96					

Key*:

PANEL NAME: B

TYPE: BOLT-ON
MOUNTING: SURFACE
FED FROM: DP-MAIN
SCCR: 10,000
LOCATION: JANITOR'S CLOSET 126

SOLID NEUTRAL
GROUND BUS

CONNECTED 45.6 kVA
MAIN: 400A/MCB
VOLTS: 120/208 Wye
PHASE: 3
WIRE: 4
DEMAND: 31.66 kVA

Panel Notes:

CKT NO.	LOAD DESCRIPTION	OVERCURRENT PROTECTION AMPS	P	A		B		C		OVERCURRENT PROTECTION P	AMPS	LOAD DESCRIPTION	CKT NO.
B-1	Lighting	20 A	1	0.45	0.18					1	20 A	Receptacles	B-2
B-3	Receptacles	20 A	1			0.36	0.18			1	20 A	Receptacles	B-4
B-5	Receptacles	20 A	1					0.18	0.37	1	20 A	CAB-1	B-6
B-7	Receptacles	20 A	1	1	0.18					1	20 A	Receptacles	B-8
B-9	Receptacles	20 A	1			1.44	0.18			1	20 A	Receptacles	B-10
B-11	POWERED DOORS	20 A	1					1	1.08	1	20 A	Receptacles	B-12
B-13	EWC *G	20 A	1	0.5	1.08					1	20 A	Receptacles	B-14
B-15	Receptacles	20 A	1			1.08	1.08			1	20 A	Receptacles	B-16
B-17	WASHER	20 A	1					1	2	2	30 A	DRYER, 3#10 & 1#10 GND	B-18
B-19	SAUNA, *10	30 A	2	1.68	2					--	--	--	B-20
B-21	--	--	--			1.68	0.36			1	20 A	Receptacles	B-22
B-23	Receptacles	20 A	1					1.26	0.18	1	20 A	EWC *G	B-24
B-25	Receptacles	20 A	1	0.9	0.72					1	20 A	Receptacles	B-26
B-27	Receptacles	20 A	1			0.9	1			1	20 A	RERIG	B-28
B-29	Receptacles	20 A	1					1.08	0.72	1	20 A	Receptacles	B-30
B-31	ICE MACHINE	20 A	1	0.6	2.45					2	30 A	DISHWASHER, *10	B-32
B-33	MICROWAVE	20 A	1			1.5	2.45			--	--	--	B-34
B-35	RERIG *G	20 A	1					1	0.54	1	20 A	Receptacles	B-36
B-37	RANGE *ST	20 A	1	0.5	1.5					1	20 A	COFFEE MAKER	B-38
B-39	SHUNT TRIP	--	--			0	0.36			1	20 A	Receptacles	B-40
B-41	Power	20 A	1					0.3	0.67	1	20 A	EF-2	B-42
B-43	Receptacles	20 A	1	1	0.18					1	20 A	Receptacles	B-44
B-45	Receptacles	20 A	1			0.36	0.9			1	20 A	Receptacles	B-46
B-47	Receptacles	20 A	1					0.72	0.72	1	20 A	Receptacles	B-48
B-49	Receptacles	20 A	1	0.72	0.72					1	20 A	Receptacles	B-50
B-51	Receptacles	20 A	1			0.72	0.72			1	20 A	Receptacles	B-52
B-53	Receptacles	20 A	1					0.18	1	1	20 A	Receptacles	B-54
B-55	SPARE	20 A	1	0	0					1	20 A	SPARE	B-56
B-57	SPARE	20 A	1			0	0			1	20 A	SPARE	B-58
B-59	SPARE	20 A	1					0	0	1	20 A	SPARE	B-60
B-61	SPARE	20 A	1	0	0					1	20 A	SPARE	B-62
B-63	SPARE	20 A	1			0	0			1	20 A	SPARE	B-64
B-65	SPARE	20 A	1					0	0	1	20 A	SPARE	B-66
B-67	SPARE	20 A	1	0	0					--	--	SPACE	B-68
B-69	SPACE	--	--			0	0			--	--	SPACE	B-70
B-71	SPACE	--	--					0	0	--	--	SPACE	B-72
B-73	SPACE	--	--	0	0					--	--	SPACE	B-74
B-75	SPACE	--	--			0	0			--	--	SPACE	B-76
B-77	SPACE	--	--					0	0	--	--	SPACE	B-78
B-79	SPACE	--	--	0	0					--	--	SPACE	B-80
B-81	SPACE	--	--			0	0			--	--	SPACE	B-82
B-83	SPACE	--	--					0	0	--	--	SPACE	B-84
			Total Load:	16.36 kVA		15.27 kVA		14 kVA					
			Total Amps:	137.95		128.88		116.67					

Key*: *G = GFCI BREAKER, *ST = SHUNT TRIP BREAKER, *F=FIRE ALARM SYSTEM REQUIRES RED HANDLE AND LOCK, *10 = #10 WIRE

PANEL NAME: C

TYPE: BOLT-ON
MOUNTING: SURFACE
FED FROM: DP-MAIN
SCCR: 10,000
LOCATION: MEZZANINE

SOLID NEUTRAL
GROUND BUS

CONNECTED 37 kVA
MAIN: 225 A/MCB
VOLTS: 120/208 Wye
PHASE: 3
WIRE: 4
DEMAND: 36.98 kVA

Panel Notes:

CKT NO.	LOAD DESCRIPTION	OVERCURRENT PROTECTION AMPS	P	A		B		C		OVERCURRENT PROTECTION P	AMPS	LOAD DESCRIPTION	CKT NO.
C-1	Receptacles	20 A	1	0.72	0.36					1	20 A	Receptacles	C-2
C-3	PLYMOVENT	50 A	3			2.93	1.27			3	20 A	P-2	C-4
C-5	--	--	--					2.93	1.27	--	--	--	C-6
C-7	--	--	--	2.93	1.27					--	--	--	C-8
C-9	P-3, 3#10 & 1#10 GND	35 A	3			2.03	2.03			3	35 A	P-4, 3#10 & 1#10 GND	C-10
C-11	--	--	--					2.03	2.03	--	--	--	C-12
C-13	--	--	--	2.03	2.03					--	--	--	C-14
C-15	HP-1, 3#6 & 1#10 GND	60 A	3			3.6	0.3			1	20 A	Power	C-16
C-17	--	--	--					3.6	0	1	20 A	SPARE	C-18
C-19	--	--	--	3.6	0					1	20 A	SPARE	C-20
C-21	SPARE	20 A	1			0	0			1	20 A	SPARE	C-22
C-23	SPARE	20 A	1					0	0	1	20 A	SPARE	C-24
C-25	SPARE	20 A	1	0	0					1	20 A	SPARE	C-26
C-27	SPARE	20 A	1			0	0			1	20 A	SPARE	C-28
C-29	SPACE	--	--					0	0	--	--	SPACE	C-30
C-31	SPACE	--	--	0	0					--	--	SPACE	C-32
C-33	SPACE	--	--			0	0			--	--	SPACE	C-34
C-35	SPACE	--	--					0	0	--	--	SPACE	C-36
C-37	SPACE	--	--	0	0					--	--	SPACE	C-38
C-39	SPACE	--	--			0	0			--	--	SPACE	C-40
C-41	SPACE	--	--					0	0	--	--	SPACE	C-42
C-43	SPACE	--	--	0	0					--	--	SPACE	C-44
C-45	SPACE	--	--			0	0			--	--	SPACE	C-46
C-47	SPACE	--	--					0	0	--	--	SPACE	C-48
C-49	SPACE	--	--	0	0					--	--	SPACE	C-50
C-51	SPACE	--	--			0	0			--	--	SPACE	C-52
C-53	SPACE	--	--					0	0	--	--	SPACE	C-54
			Total Load:	12.95 kVA		12.17 kVA		11.87 kVA					
			Total Amps:	108.27		101.77		98.89					

[Key*:]

OPN ARCHITECTS
301 N BROOM STREET #100
MADISON, WI 53703
608-819-0260 PHONE
www.opnarchitects.com
opn@opnarchitects.com

All reports, plans, specifications, computer files, field data, notes and other documents and instruments prepared by OPN Architects, Inc. as instruments of service shall remain the property of OPN Architects, Inc. OPN Architects, Inc. shall retain all common law, statutory and other reserved rights, including the copyright thereto.

© 2017 OPN Architects, Inc.

Owner
City of Madison Fire Department
314 W. Dayton St.
Madison, WI 53703

Project
Madison Fire Station 14
3201 Dairy Drive
Madison, WI 53718

Civil Engineer
Snyder & Associates, Inc
5010 Voges Rd
Madison WI, 53718
P. 608-838-0444

Structural Engineer
IMEG
1800 Deming Way #200
Middleton, WI 53562
P. 608-223-9600

Mechanical Engineer
IMEG
1800 Deming Way #200
Middleton, WI 53562
P. 608-223-9600

Electrical Engineer
IMEG
1800 Deming Way #200
Middleton, WI 53562
P. 608-223-9600

Key Plan

Sheet Issue Date
BID DOCUMENTS 11/03/17

Revision | Date

IMEG
1800 DEMING WAY, SUITE 200
MIDDLETON, WI 53562
608.223.9600 FAX: 608.836.0415
www.imegcorp.com
PROJECT # 17001140.00

IMEG CORP RESERVES PROPRIETARY RIGHTS, INCLUDING COPYRIGHTS, TO THIS DRAWING AND THE DATA SHOWN THEREON. SAID DRAWING AND/OR DATA ARE THE EXCLUSIVE PROPERTY OF IMEG CORP AND SHALL NOT BE USED OR REPRODUCED FOR ANY OTHER PROJECT WITHOUT THE EXPRESS WRITTEN APPROVAL AND PARTICIPATION OF IMEG CORP. © 2017 IMEG CORP.

REFERENCE SCALE IN INCHES
0 1 2 3

Drawing
DETAILS AND SCHEDULES - ELECTRICAL

City of Madison Contract No. **8027**
OPN Project No. **17207000**

E301

VIEW KEY

NAME — LEVEL NAME
10' - 0" — HEIGHT ABOVE PROJECT 0' - 0"

1 — INDICATES NOTE USED TO DESCRIBE ADDITIONAL INFORMATION ABOUT WORK REQUIRED, SPECIFIC TO THE SHEET AND/OR DETAIL

NORTH — INDICATES DIRECTION OF TRUE NORTH

1 — PLAN OR DETAIL NUMBER

VIEW NAME — PLAN OR DETAIL NAME

1/8" = 1'-0" — PLAN OR DETAIL SCALE

SIM — INDICATES SIMILAR DETAIL REFERENCED IN MULTIPLE LOCATIONS

1 / M101 — DETAIL REFERRED TO BY SECTION CUT; SHEET DETAIL IS LOCATED ON

SIM — INDICATES SIMILAR DETAIL REFERENCED IN MULTIPLE LOCATIONS

1 / 4 / 2 / 3 / T101 — DETAIL REFERRED TO BY ELEVATION; SHEET DETAIL IS LOCATED ON

LINE TYPE KEY:

- NEW WORK BY THIS CONTRACTOR (DARK SOLID LINE)
- NEW WORK UNDERFLOOR OR UNDERGROUND BY THIS CONTRACTOR (DARK LONG DASHED LINE)
- NEW WORK BY OTHERS (LIGHT SOLID LINE)

FIRE / SMOKE BARRIER DESIGNATIONS

REFER TO ARCHITECTURAL LIFE SAFETY PLANS FOR WALL AND FLOOR RATINGS.

PLUMBING SYMBOL LIST

NOT ALL SYMBOLS MAY APPLY.

SYMBOL:	DESCRIPTION:
CA	COMPRESSED AIR
CW	COLD WATER - POTABLE
D	DRAIN
G	NATURAL GAS
GRV	GAS REGULATOR VENT
GSAN	SANITARY DRAINAGE (GREASE SANITARY DRAINAGE)
GV	GREASE VENT
HW	HOT WATER - POTABLE
HWC	HOT WATER CIRCULATING - POTABLE
HW140	HOT WATER - POTABLE NUMBER INDICATES TEMP
HWC140	HOT WATER CIRC. - POTABLE NUMBER INDICATES TEMP
SAN	SANITARY DRAINAGE
SCW	SOFT COLD WATER
SHW	SOFT HOT WATER
ST(1,000)	STORM DRAINAGE (ROOF SQUARE FOOTAGE)
TW	TEMPERED WATER
V	VENT
W	SERVICE WATER - POTABLE
	PIPE CONTINUATION
	PIPE CAP
	PIPE DOWN
	PIPE UP OR UP/DOWN
FD	PIPE SERVING FIXTURE ON FLOOR ABOVE (EXAMPLE: FD = FLOOR DRAIN)
	PITCH PIPE IN DIRECTION
	DIRECTION OF FLOW IN PIPE
	ROUTE TO DRAIN
RD-1 6"(1000)	ROOF DRAIN PROPERTIES — SYMBOL; SIZE (ROOF SQ. FT.)
	NEW CONNECTION
	DIELECTRIC CONNECTION
	UNION/FLANGE
	SHUTOFF VALVE NORMALLY OPEN
	SHUTOFF VALVE NORMALLY CLOSED
GPM	BALANCING VALVE (NUMBER INDICATES GPM)
	CHECK VALVE
SE	SOLENOID VALVE
	SAFETY/RELIEF VALVE
	VACUUM BREAKER
P	PRESSURE GAUGE (FURNISHED WITH BALL VALVE)
P	PRESSURE SENSOR (FURNISHED WITH BALL VALVE)
T	TEMPERATURE SENSOR WITH WELL
T	THERMOMETER WITH WELL (DIAL TYPE)
	THERMOMETER WITH WELL (FILLED TYPE)
	REDUCER - REFERENCE SPECIFICATION FOR CONCENTRIC/ECCENTRIC AND FOT/FOB
	PRESSURE REDUCING VALVE (LIQUID/GAS)
	PUMP
M	METER

PLUMBING ABBREVIATION KEY

ABBR:	DESCRIPTION:
AD	ACCESS DOOR
AFF	ABOVE FINISHED FLOOR
BFP	BACKFLOW PREVENTER
BT	BATHTUB
CB	CATCH BASIN
CI	CAST IRON
CO	CLEANOUT
DF	DRINKING FOUNTAIN
DI	DUCTILE IRON
E	EXISTING
EE	EMERGENCY EYEWASH
ES	EMERGENCY SHOWER
ESE	EMERGENCY SHOWER/EYEWASH
EWC	ELECTRIC WATER COOLER
FCO	FLOOR CLEANOUT
FD	FLOOR DRAIN
FM	FLOW METER
FS	FLOOR SINK
GD	GARBAGE DISPOSER
GI	GREASE INTERCEPTOR
HB	HOSE BIBB
I.E.	INVERT ELEVATION (FOR REFERENCE ONLY)
LAV	LAVATORY
MB	MOP BASIN
MH	MANHOLE
MV	MIXING VALVE
NC	NEW CONNECTION
NIC	NOT IN CONTRACT
RD	ROOF DRAIN
SH	SHOWER
SK	SINK
SS	SERVICE SINK
TD	TRENCH DRAIN
TP	TRAP PRIMER
TYP	TYPICAL
UR	URINAL
VTR	VENT THROUGH ROOF
WC	WATER CLOSET
WCO	WALL CLEANOUT
WF	WASH FOUNTAIN
WH	WATER HEATER
WMF	WASHING MACHINE FIXTURE
WM	WATER METER
WS	WATER SOFTENER
UB	UTILITY BOX
UNO	UNLESS NOTED OTHERWISE
YCO	YARD CLEANOUT

PLUMBING FIXTURE ROUGH-IN SCHEDULE

NOTES:
1. SANITARY RISER UP IN WALL TO FIXTURE SHALL BE A MINUMUM OF 2".
2. 1/2" CW AND HW APPLIES ONLY TO THE FINAL VERTICAL RISE-DROP TO EACH FIXTURE, BRANCH PIPING TO VERTICAL RISE-DROP SHALL BE A MINIMUM OF 3/4" UNLESS NOTED OTHERWISE.
3. SIZES SHOWN ARE MINIMUMS. SIZES SHOWN ON THE DRAWING THAT ARE LARGER THAN THE SIZES LISTED IN THE SCHEDULE SHALL DICTATE THE ROUGH-IN SIZE.

FIXTURE DESCRIPTION	DOMESTIC CW (NOTE 3)	DOMESTIC HW (NOTE 3)	SANITARY (NOTE 3)	VENT (NOTE 3)	REMARKS
ELECTRIC WATER COOLER	1/2"		1 1/2"	1 1/4"	
EMERGENCY SHOWER/EYEWASH	1 1/4"	1 1/4"	3"	2"	
FLOOR DRAIN/FLOOR SINK	-	-	3"	1 1/2"	-
FLOOR DRAIN/FLOOR SINK	-	-	4"	2"	-
HOSE BIBB	3/4"	-	-	-	-
HOSE REEL	3/4"				
HUB DRAIN	-	-	3"	1 1/2"	-
LAUNDRY TROUGH			4"	2"	
LAV	1/2"	1/2"	1 1/4"	1 1/4"	
MOP BASIN	3/4"	3/4"	3"	1 1/2"	
SHOWER	3/4"	3/4"	2"	1 1/2"	
SINK	3/4"	3/4"	2"	1 1/2"	
TRENCH DRAIN/ CATCH BASIN			4"	2"	
UTILITY BOX - COLD WATER	1/2"	-	-	-	-
UTILITY BOX - WASHING MACHINE	3/4"	3/4"	2"	1 1/4"	-
WASH FOUNTAIN	3/4"	3/4"	2"	1 1/2"	
WATER CLOSET	1 1/2"		4"	2"	

PLUMBING SHEET INDEX

Sheet Number	Sheet Name
P000	PLUMBING COVER SHEET
P101	UNDERFLOOR PLAN - PLUMBING
P102	FLOOR PLAN LEVEL 1 - PLUMBING
P103	MEZZANINE PLAN - PLUMBING
P104	ROOF PLAN - PLUMBING
P200	ENLARGED PLAN - PLUMBING
P300	DOMESTIC WATER FLOW DIAGRAM - PLUMBING
P301	DETAILS - PLUMBING
P400	RISER DIAGRAM - SOUTH - PLUMBING
P401	RISER DIAGRAM - NORTH - PLUMBING
P402	RISER DIAGRAM - SOUTH - PLUMBING
P403	RISER DIAGRAM - NORTH - PLUMBING
P500	MATERIAL LIST - PLUMBING

CONTRACTOR ABBREVIATION KEY

ABBR:	DESCRIPTION:
T.C.C.	AUTOMATIC TEMPERATURE CONTROL CONTRACTOR
A.V.C.	AUDIO/VISUAL CONTRACTOR
C.C.	CIVIL CONTRACTOR
C.M.	CONSTRUCTION MANAGER
E.C.	ELECTRICAL CONTRACTOR
F.P.C.	FIRE PROTECTION CONTRACTOR
F.S.C.	FOOD SERVICE CONTRACTOR
G.C.	GENERAL CONTRACTOR
H.C.	HEATING CONTRACTOR
M.C.	MECHANICAL CONTRACTOR
P.C.	PLUMBING CONTRACTOR
S.C.	SECURITY CONTRACTOR
T.C.	TECHNOLOGY CONTRACTOR
T.C.C.	TEMPERATURE CONTROLS CONTRACTOR
V.C.	VENTILATION CONTRACTOR

PLUMBING GENERAL NOTES:

1. THE SYMBOLS AND THE MATERIAL LIST ARE FOR THE CONVENIENCE OF THE CONTRACTOR. CONTRACTOR SHALL VERIFY QUANTITIES AND FURNISH ALL MATERIALS REQUIRED FOR FULLY OPERATIONAL SYSTEMS, WHETHER SPECIFIED OR NOT.
2. CATALOG NUMBERS SHALL NOT BE CONSIDERED COMPLETE, BUT ARE GIVEN AS AN AID TO THE CONTRACTOR AND TO INDICATE THE QUALITY REQUIRED. CONTRACTOR IS RESPONSIBLE FOR COMPLETE DESCRIPTION OF MATERIAL ON THESE DRAWINGS AND IN THE SPECIFICATIONS BEFORE ORDERING. THE DESCRIPTION OF THE MATERIAL TAKES PRECEDENCE OVER THE CATALOG NUMBER. THE FIRST MANUFACTURER LISTED IS THE BASIS OF DESIGN.
3. CONTRACTOR SHALL VERIFY THAT FIXTURES SUPPLIED ARE APPROVED PER ALL APPLICABLE STATE, LOCAL AND GOVERNING AUTHORITIES.
4. ALL FIXTURES SHALL CONFORM TO FEDERAL ACT S.3874
5. INVERT ELEVATIONS ARE FROM EXISTING DRAWINGS AND MAY NOT BE ACCURATE. VERIFY ALL ELEVATIONS BEFORE BEGINNING WORK.
6. VERIFY UNDERGROUND PIPE SIZES, INVERT ELEVATIONS, AND LOCATIONS PRIOR TO BEGINNING ANY WORK.
7. REFER TO THE PLUMBING ROUGH-IN SCHEDULE FOR THE SIZES OF BRANCH PIPES TO PLUMBING FIXTURES.
8. FOR CLARITY, NOT ALL VALVES HAVE BEEN SHOWN. PROVIDE SHUTOFF VALVES IN DOMESTIC WATER PIPING SERVING EACH ROOM WITH FIXTURES. ANGLE STOPS SHALL NOT BE CONSIDERED SHUTOFF VALVES.
9. P.C. SHALL CUT AND PATCH EXISTING AS REQUIRED FOR NEW OR DEMOLITION WORK UNLESS NOTED OTHERWISE. SEE SPECIFICATION SECTION 22 05 05 FOR ADDITIONAL INFORMATION.

MECHANICAL GENERAL NOTES:

THESE NOTES APPLY TO ALL MECHANICAL SHEETS AND TRADES, INCLUDING BUT NOT LIMITED TO, FIRE PROTECTION, PLUMBING, VENTILATION, PIPING AND TEMPERATURE CONTROL.

1. DRAWINGS SHOWING LOCATIONS OF EQUIPMENT, DUCTWORK, PIPING, ETC. ARE DIAGRAMMATIC AND MAY NOT ALWAYS REFLECT EXACT INSTALLATION CONDITIONS. DRAWINGS SHOW THE GENERAL ARRANGEMENT OF DUCTWORK, PIPING, EQUIPMENT, ETC., AND MAY NOT INCLUDE ALL OFFSETS AND FITTINGS REQUIRED FOR COMPLETE INSTALLATION. THE DRAWINGS SHALL BE FOLLOWED AS CLOSELY AS ACTUAL BUILDING CONSTRUCTION AND THE WORK OF OTHERS WILL PERMIT.
2. DO NOT SCALE DRAWINGS. VERIFY ALL DIMENSIONS AND CLEARANCES FROM ARCHITECTURAL, STRUCTURAL, SUBMITTALS, AND OTHER APPROPRIATE DRAWINGS OR PHYSICALLY AT SITE. REVIEW ALL DRAWINGS, INCLUDING THOSE OF OTHER TRADES.
3. COORDINATE ALL WORK WITH ALL OTHER TRADES PRIOR TO INSTALLATION TO PROVIDE CLEARANCES REQUIRED FOR OPERATION, MAINTENANCE, CODE COMPLIANCE, AND TO VERIFY NON-INTERFERENCE WITH OTHER WORK. DO NOT FABRICATE PRIOR TO VERIFICATION OF NECESSARY CLEARANCES FOR ALL TRADES. BRING ANY INTERFERENCES OR CONFLICTS TO THE ATTENTION OF THE ARCHITECT/ENGINEER BEFORE PROCEEDING WITH FABRICATION OR EQUIPMENT ORDERS.
4. REVIEW SPACE REQUIREMENTS OF EQUIPMENT SPECIFIED OR SUBSTITUTED AND MAKE REASONABLE ACCOMMODATIONS IN LAYOUT AND POSITIONING TO PROVIDE PROPER ACCESS.
5. ANY CHANGES REQUIRED TO ELIMINATE CONFLICTS OR THAT RESULT FROM A FAILURE TO COORDINATE SHALL BE MADE BY THE CONTRACTOR WITHOUT ADDITIONAL COST OR EXPENSE TO OTHERS.
6. EACH CONTRACTOR IS RESPONSIBLE FOR ALL COSTS ASSOCIATED WITH ELECTRICAL CHANGES REQUIRED FOR EQUIPMENT PROPOSED THAT DIFFERS FROM THE BASIS OF DESIGN.
7. REFER TO ARCHITECTURAL REFLECTED CEILING PLAN, ELECTRICAL, TECHNOLOGY AUDIO/VISUAL, AND OTHER MECHANICAL PLANS FOR EXACT LOCATIONS OF ALL CEILING MOUNTED DEVICES, OTHER THAN SPRINKLERS.
8. EACH CONTRACTOR IS RESPONSIBLE FOR DAMAGE CAUSED BY THEIR ACTIONS TO WALLS, FLOORS, CEILINGS, AND ROOFS. THE CONTRACTOR WHOSE WORK CAUSES DAMAGE IS RESPONSIBLE FOR PATCHING TO MATCH ORIGINAL CONSTRUCTION, FIRE RATING, AND FINISH.
9. IN AREAS WITH DRYWALL CEILINGS COORDINATE LOCATIONS OF ACCESS PANELS WITH THE GC FOR ACCESS TO VALVES, DUCTWORK ACCESSORIES, DAMPERS, ETC. COORDINATE PANEL TYPE AND COLOR WITH ARCHITECT. NOTIFY THE GC OF THE REQUIRED ACCESS PANELS PRIOR TO BIDDING.
10. SEAL ALL FLOOR, WALL, AND ROOF PENETRATIONS AIRTIGHT WHERE CONDUITS, PIPING, AND DUCTS PENETRATE. PENETRATIONS THROUGH EXTERIOR WALLS AND ROOF SHALL BE SEALED AIRTIGHT WITH WATERPROOFING MATERIALS RECOMMENDED BY MANUFACTURER FOR OUTDOOR USE.
11. CAULK ALL PIPE AND DUCT PENETRATIONS OF FULL HEIGHT NON-FIRE RATED WALL, PARTITION, FLOOR, AND ROOF ASSEMBLIES. THIS IS ESSENTIAL TO PREVENT NOISE TRANSMISSION FROM ONE ROOM TO ANOTHER AND TO PROVIDE THE DESIRED NC LEVELS WITHIN ROOMS.
12. WHERE PIPES AND DUCTS ARE SHOWN TO PENETRATE FLOORS, PROVIDE SLEEVED OPENINGS WITH THE TOP EDGE RAISED ABOVE FLOOR SURFACE IN ACCORDANCE WITH ALL RELEVANT SPEC SECTIONS. SEAL SLEEVE PERIMETER TO BE WATERTIGHT.
13. EQUIPMENT SIZES AND SERVICE CLEARANCE REQUIREMENTS VARY BETWEEN DIFFERENT MANUFACTURERS. CONSULT APPROVED SHOP DRAWINGS FOR EQUIPMENT SIZES AND REQUIRED SERVICE CLEARANCES. COORDINATE WITH LAYOUT OF EQUIPMENT PADS, PIPING, DUCTWORK, ETC.
14. DO NOT BLOCK TUBE PULL OR EQUIPMENT SERVICE CLEARANCES.
15. MAINTAIN MINIMUM 3'-6" CLEARANCE IN FRONT OF ALL ELECTRICAL PANELS, MOTOR STARTERS, SWITCHES, AND DISCONNECTS.
16. PROVIDE CONCRETE EQUIPMENT PAD FOR ALL FLOOR MOUNTED EQUIPMENT. PAD SHALL EXTEND MINIMUM 6" BEYOND ALL SIDES OF EQUIPMENT.
17. DO NOT SUPPORT EQUIPMENT, PIPING, OR DUCTWORK FROM METAL DECKING OR OTHER NON-STRUCTURAL BUILDING ELEMENTS. ANCHORS EMBEDDED IN CONCRETE SHALL BE CRACKED CONCRETE APPROVED IN ACCORDANCE WITH SPECIFICATIONS.

CONTACT PERSONS:

DESCRIPTION:	PERSON:
PROJECT MANAGER	TIM PAAP
MECHANICAL ENGINEER	PAUL HANSEN
ELECTRICAL ENGINEER	TIM PAAP
TECHNOLOGY ENGINEER	GWEN BROMME
STRUCTURAL ENGINEER	ABBY PERTZBORN

WATER CALCULATION WORKSHEET - HOT WATER

CALCULATE THE PRESSURE AVAILABLE FOR UNIFORM LOSS (VALUE OF "A")		
B. PRESSURE AVAILABLE AFTER THE BUILDING CONTROL VALVE (FROM #9 ABOVE):	VALUE OF "B"	68.4
C. PRESSURE LOSS OF WATER METER (WHEN METER IS REQUIRED)	SUBTRACT VALUE OF "C"	5.0
D. PRESSURE AT CONTROLLING FIXTURE:	SUBTOTAL	63.4
CONTROLLING FIXTURE IS: EMERGENCY EYEWASH	SUBTRACT VALUE OF "D"	30.0
	SUBTOTAL	33.4
E. DIFFERENCE IN ELEVATION BETWEEN BUILDING CONTROL VALVE AND THE CONTROLLING FIXTURE IN FEET: 14 X0.434 PSI/FT	SUBTRACT VALUE OF "E"	3.5
	SUBTOTAL	29.9
F. PRESSURE LOSS DUE TO WATER TREATEMENT DEVICES AND BACKFLOW PREVENTERS WHICH SERVE THE CONTROLLING FIXTURE (WATER SOFTENERS, FILTERS, ETC. PRESSURE LOSS DUE TO WATER SOFTENER		
F1. WSFU DOWNSTREAM OF WATER TREATEMENT DEVICE:		42.5 WSFU
F2. CONVERT WSFU TO GPM USING TABLE 382.40-3:		25 GPM
F3. CONVERT WSFU TO GPM USING TABLE 382.40-3E*: (FOR INDIVIDUAL DWELLING UNITS ONLY)		0 GPM
F4. REFER TO MANUF. GRAPH TO OBTAIN PRESSURE LOSS:	SUBTRACT VALUE OF "F4"	15.0
	SUBTOTAL	14.9
G. PRESSURE LOSS FOR FUTURE ALLOWANCE:	SUBTRACT VALUE OF "G"	0.0
	SUBTOTAL	14.9
H. PRESSURE LOSS THROUGH TANKLESS WATER HEATERS, COMBINATION BOILER/WATER HEATERS, HEAT EXCHANGERS WHICH SERVE THE CONTROLLING FIXTURE:	SUBTRACT VALUE OF "H"	0.0
	SUBTOTAL	14.9
I. DEVELOPED LENGTH FROM BUILDING CONTROL VALVE TO CONTROLLING FIXTURE IN FEET: FEET X 1.5: 150	DIVIDE BY VALUE OF "I"	375
	SUBTOTAL	0.040
A. PRESSURE AVAILABLE FOR UNIFORM LOSS	MULTIPLY BY:	100
WATER DISTRIBUTION PIPING IS: COPPER, TYPE L	A (PSI/100 FT)	3.97

WATER CALCULATION WORKSHEET - SOFTENED COLD WATER

INFORMATION REQUIRED TO SIZE WATER SERVICE AND WATER DISTRIBUTION (CW):		
1. DEMAND OF BUILDING IN WATER SUPPLY FIXTURE UNITS (WSFU):		171.25 WSFU
1A. DEMAND OF BUILDING IN WSFU CONVETED TO GALLONS PER MINUTE:		85.25 GPM
2. ELEVATION DIFFERENCE FROM MAIN OR EXTERNAL PRESSURE TANK TO BUILDING CONTROL VALVE:		0 FEET
3. SIZE OF WATER METER:		2 INCHES
4. DEVELOPED LENGTH FROM MAIN OR EXTERNAL PRESSURE TANK TO BUILDING CONTROL VALVE:		210 FEET
5. LOW PRESSURE AT MAIN IN STREET OR EXTERNAL PRESSURE TANK:		69 PSI
CALCULATE WATER PRESSURE LOSS		
6. LOW PRESSURE AT MAIN IN STREET OR EXTERNAL PRESSURE TANK (VALUE OF #5 ABOVE):		69.0
7. DETERMINE PRESSURE LOSS DUE TO FRICTION IN 6" DIAMETER WATER SERVICE. WATER SERVICE PIPING MATERIAL IS: DUCTILE IRON PRESSURE LOSS PER 100 FEET:		0.30
SUBTRACT VALUE OF "7"		0.63
SUBTOTAL		68.37
8. DETERMINE PRESSURE LOSS OR GAIN DUE TO ELEVATION, (MULTIPLY THE VALUE OF #2 ABOVE BY 0.434): SUBTRACT VALUE OF "8"		0.0
9. AVAILABLE PRESSURE AFTER THE BUILDING CONTROL VALVE:	SUBTOTAL	68.4
CALCULATE THE PRESSURE AVAILABLE FOR UNIFORM LOSS (VALUE OF "A")		
B. PRESSURE AVAILABLE AFTER THE BUILDING CONTROL VALVE (FROM #9 ABOVE):	VALUE OF "B"	68.4
C. PRESSURE LOSS OF WATER METER (WHEN METER IS REQUIRED)	SUBTRACT VALUE OF "C"	5.0
D. PRESSURE AT CONTROLLING FIXTURE:	SUBTOTAL	63.4
CONTROLLING FIXTURE IS: EMERGENCY EYE WASH	SUBTRACT VALUE OF "D"	30.0
	SUBTOTAL	33.4
E. DIFFERENCE IN ELEVATION BETWEEN BUILDING CONTROL VALVE AND THE CONTROLLING FIXTURE IN FEET: 7x0.434 PSI/FT	SUBTRACT VALUE OF "E"	3.5
	SUBTOTAL	29.9
F. PRESSURE LOSS DUE TO WATER TREATEMENT DEVICES AND BACKFLOW PREVENTERS WHICH SERVE THE CONTROLLING FIXTURE (WATER SOFTENERS, FILTERS, ETC.) PRESSURE LOSS DUE TO WATER SOFTENER		
F1. WSFU DOWNSTREAM OF WATER TREATEMENT DEVICE:		119.75 WSFU
F2. CONVERT WSFU TO GPM USING TABLE 382.40-3:		73 GPM
F3. CONVERT WSFU TO GPM USING TABLE 382.40-3E*: (FOR INDIVIDUAL DWELLING UNITS ONLY)		N/A
F4. REFER TO MANUF. GRAPH TO OBTAIN PRESSURE LOSS:	SUBTRACT VALUE OF "F4"	15.0
	SUBTOTAL	14.9
G. PRESSURE LOSS FOR FUTURE ALLOWANCE:	SUBTRACT VALUE OF "G"	0.0
	SUBTOTAL	14.9
H. DEVELOPED LENGTH FROM BUILDING CONTROL VALVE TO CONTROLLING FIXTURE IN FEET: FEET X 1.5: 250	DIVIDE BY VALUE OF "H"	375
	SUBTOTAL	0.040
A. PRESSURE AVAILABLE FOR UNIFORM LOSS	MULTIPLY BY:	100
WATER DISTRIBUTION PIPING IS: COPPER, TYPE L	A (PSI/100 FT)	3.97

IMEG
1800 DEMING WAY, SUITE 200
MIDDLETON, WI 53562
608.223.9600 FAX: 608.836.0415
www.imegcorp.com
PROJECT # 17001140.00

IMEG CORP RESERVES PROPRIETARY RIGHTS, INCLUDING COPYRIGHTS, TO THIS DRAWING AND THE DATA SHOWN THEREON. SAID DRAWING AND/OR DATA ARE THE EXCLUSIVE PROPERTY OF IMEG CORP AND SHALL NOT BE USED OR REPRODUCED FOR ANY OTHER PROJECT WITHOUT THE EXPRESS WRITTEN APPROVAL AND PARTICIPATION OF IMEG CORP. © 2017 IMEG CORP.

REFERENCE SCALE IN INCHES
0 1 2 3

OPN ARCHITECTS
301 N BROOM STREET #100
MADISON, WI 53703
608-819-0260 PHONE
www.opnarchitects.com
opn@opnarchitects.com

All reports, plans, specifications, computer files, field data, notes and other documents and instruments prepared by OPN Architects, Inc. as instruments of service shall remain the property of OPN Architects, Inc. OPN Architects, Inc. shall retain all common law, statutory and other reserved rights, including the copyright thereto.

© 2017 OPN Architects, Inc.

Owner
City of Madison Fire Department
314 W. Dayton St.
Madison, WI 53703

Project
Madison Fire Station 14
3201 Dairy Drive
Madison, WI 53718

Civil Engineer
Snyder & Associates, Inc
5010 Voges Rd
Madison WI, 53718
P. 608-838-0444

Structural Engineer
IMEG
1800 Deming Way #200
Middleton, WI 53562
P. 608-223-9600

Mechanical Engineer
IMEG
1800 Deming Way #200
Middleton, WI 53562
P. 608-223-9600

Electrical Engineer
IMEG
1800 Deming Way #200
Middleton, WI 53562
P. 608-223-9600

Key Plan

Sheet Issue Date
BID DOCUMENTS 11/03/17

Revision Date

Drawing
PLUMBING COVER SHEET

City of Madison Contract No. **8027**
OPN Project No. **17207000**

P000

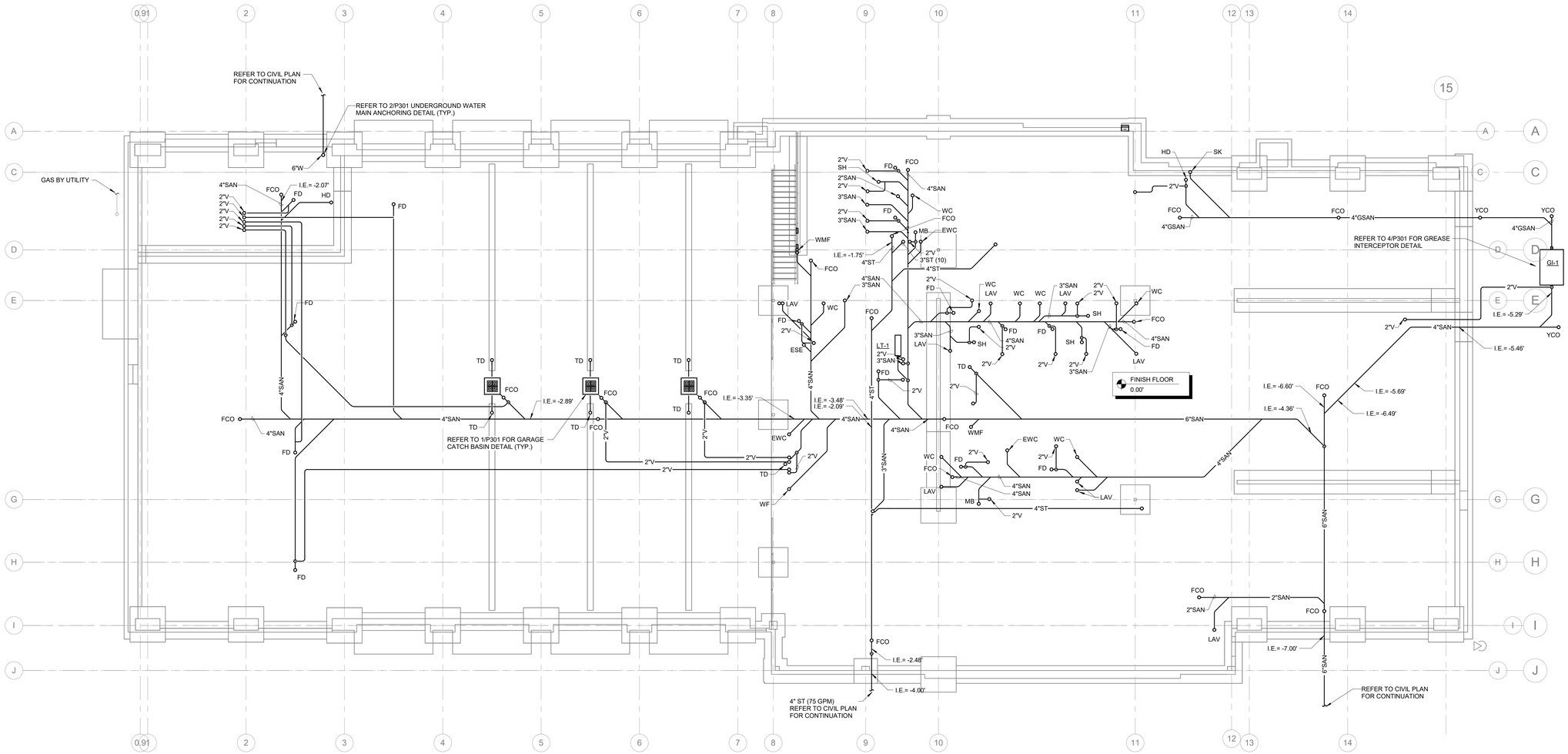

1 UNDERFLOOR PLAN PLUMBING

1/8" = 1'-0"

NORTH

OPN ARCHITECTS

301 N BROOM STREET #100
MADISON, WI 53703
608-819-0260 PHONE
www.opnarchitects.com
opn@opnarchitects.com

All reports, plans, specifications, computer files, field data, notes and other documents and instruments prepared by OPN Architects, Inc. as instruments of service shall remain the property of OPN Architects, Inc. OPN Architects, Inc. shall retain all common law, statutory and other reserved rights, including the copyright thereto.

© 2017 OPN Architects, Inc.

Owner

City of Madison Fire Department
314 W. Dayton St.
Madison, WI 53703

Project

Madison Fire Station 14
3201 Dairy Drive
Madison, WI 53718

Civil Engineer

Snyder & Associates, Inc
5010 Voges Rd
Madison WI, 53718
P. 608-838-0444

Structural Engineer

IMEG
1800 Deming Way #200
Middleton, WI 53562
P. 608-223-9600

Mechanical Engineer

IMEG
1800 Deming Way #200
Middleton, WI 53562
P. 608-223-9600

Electrical Engineer

IMEG
1800 Deming Way #200
Middleton, WI 53562
P. 608-223-9600

Key Plan

Sheet Issue Date

BID DOCUMENTS 11/03/17

Revison Date

IMEG
1800 DEMING WAY, SUITE 200
MIDDLETON, WI 53562
608.223.9600 FAX: 608.836.0415
www.imegcorp.com
PROJECT # 17001140.00

IMEG CORP RESERVES PROPRIETARY RIGHTS, INCLUDING COPYRIGHTS, TO THIS DRAWING AND THE DATA SHOWN THEREON. SAID DRAWING AND/OR DATA ARE THE EXCLUSIVE PROPERTY OF IMEG CORP AND SHALL NOT BE USED OR REPRODUCED FOR ANY OTHER PROJECT WITHOUT THE EXPRESS WRITTEN APPROVAL AND PARTICIPATION OF IMEG CORP. © 2017 IMEG CORP.

REFERENCE SCALE IN INCHES
0 1 2 3

Drawing

UNDERFLOOR PLAN - PLUMBING

City of Madison Contract No. **8027**
OPN Project No. **17207000**

P101

KEYNOTES: #

1. INSTALL OWNER FURNISHED AIR COMPRESSOR PER MANUFACTURER REQUIREMENTS. AIR COMPRESSOR IS BAUER MANUFACTURER WITH MODEL NUMBER UNICUS III.
2. PIPING SHALL BE ROUTED ABOVE CEILING LID OF ELECTRICAL ROOM NEAR EAST EXTERIOR WALL, BUT BELOW POLYCARBONATE GLAZING. PIPING SHALL THAN ROUTE UP INTERIOR OF NORTH EXTERIOR WALL TO TRUSS SPACE BEFORE ROUTING TO MEZZANINE AREA. REFER TO RISER DIAGRAMS FOR ADDITIONAL INFORMATION.
3. PROVIDE 1/2" G DOWN TO GAS CONNECTION FOR EXTERIOR NATURAL GAS GRILLE. PROVIDE EXTERIOR SHUTOFF VALVE AND QUICK CONNECT COUPLING. COORDINATE EXACT CONNECTIONS WITH OWNER.
4. ROUTE HW PIPING TO RESIDENTIAL DISHWASHER PER MANUFACTURER'S REQUIREMENTS.
5. ROUTE 1/2" CW TO COFFEE MAKER HOOKUP ON COUNTER. LOCATE BFP-2 UNDER SINK TO SERVE COFFEE MAKER.

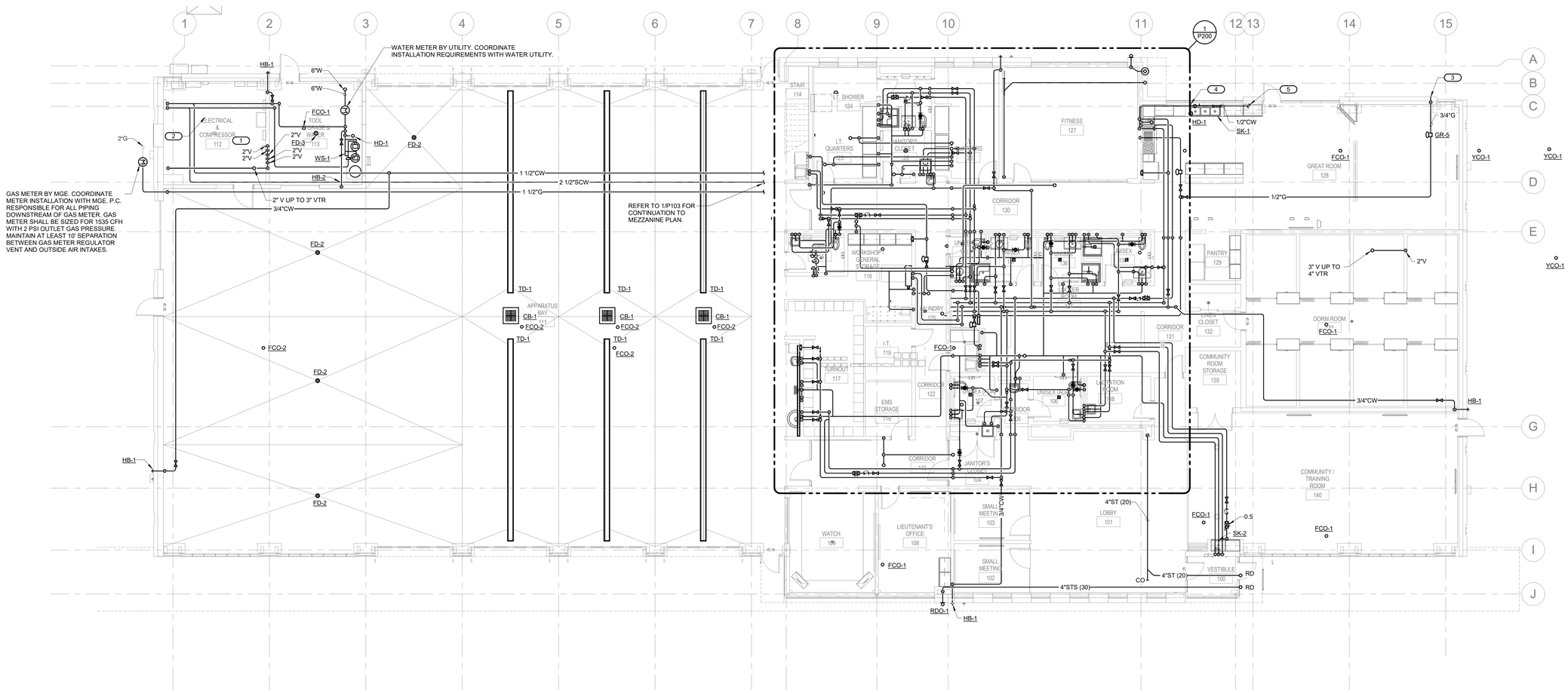

1 FLOOR PLAN LEVEL 1 - PLUMBING

1/8" = 1'-0"

OPN ARCHITECTS
301 N BROOM STREET #100
MADISON, WI 53703
608-819-0260 PHONE
www.opnarchitects.com
opn@opnarchitects.com

All reports, plans, specifications, computer files, field data, notes and other documents and instruments prepared by OPN Architects, Inc. as instruments of service shall remain the property of OPN Architects, Inc. OPN Architects, Inc. shall retain all common law, statutory and other reserved rights, including the copyright thereto.

© 2017 OPN Architects, Inc.

Owner

City of Madison Fire Department
314 W. Dayton St.
Madison, WI 53703

Project

Madison Fire Station 14
3201 Dairy Drive
Madison, WI 53718

Civil Engineer

Snyder & Associates, Inc
5010 Voges Rd
Madison WI, 53718
P. 608-838-0444

Structural Engineer

IMEG
1800 Deming Way #200
Middleton, WI 53562
P. 608-223-9600

Mechanical Engineer

IMEG
1800 Deming Way #200
Middleton, WI 53562
P. 608-223-9600

Electrical Engineer

IMEG
1800 Deming Way #200
Middleton, WI 53562
P. 608-223-9600

Key Plan

Sheet Issue Date

BID DOCUMENTS 11/03/17

Revision	Date

IMEG
1800 DEMING WAY, SUITE 200
MIDDLETON, WI 53562
608.223.9600 FAX: 608.836.0415
www.imegcorp.com
PROJECT # 17001140.00

IMEG CORP RESERVES PROPRIETARY RIGHTS, INCLUDING COPYRIGHTS, TO THIS DRAWING AND THE DATA SHOWN THEREON. SAID DRAWING AND/OR DATA ARE THE EXCLUSIVE PROPERTY OF IMEG CORP AND SHALL NOT BE USED OR REPRODUCED FOR ANY OTHER PROJECT WITHOUT THE EXPRESS WRITTEN APPROVAL AND PARTICIPATION OF IMEG CORP. © 2017 IMEG CORP.

REFERENCE SCALE IN INCHES
0 1 2 3

Drawing

FLOOR PLAN LEVEL 1 - PLUMBING

City of Madison Contract No. **8027**
OPN Project No. **17207000**

P102

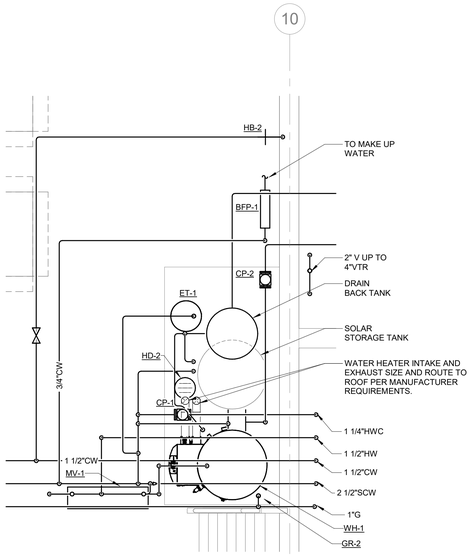

2 ENLARGE PLAN - MEZZANINE PLAN - PLUMBING

1/2" = 1'-0"

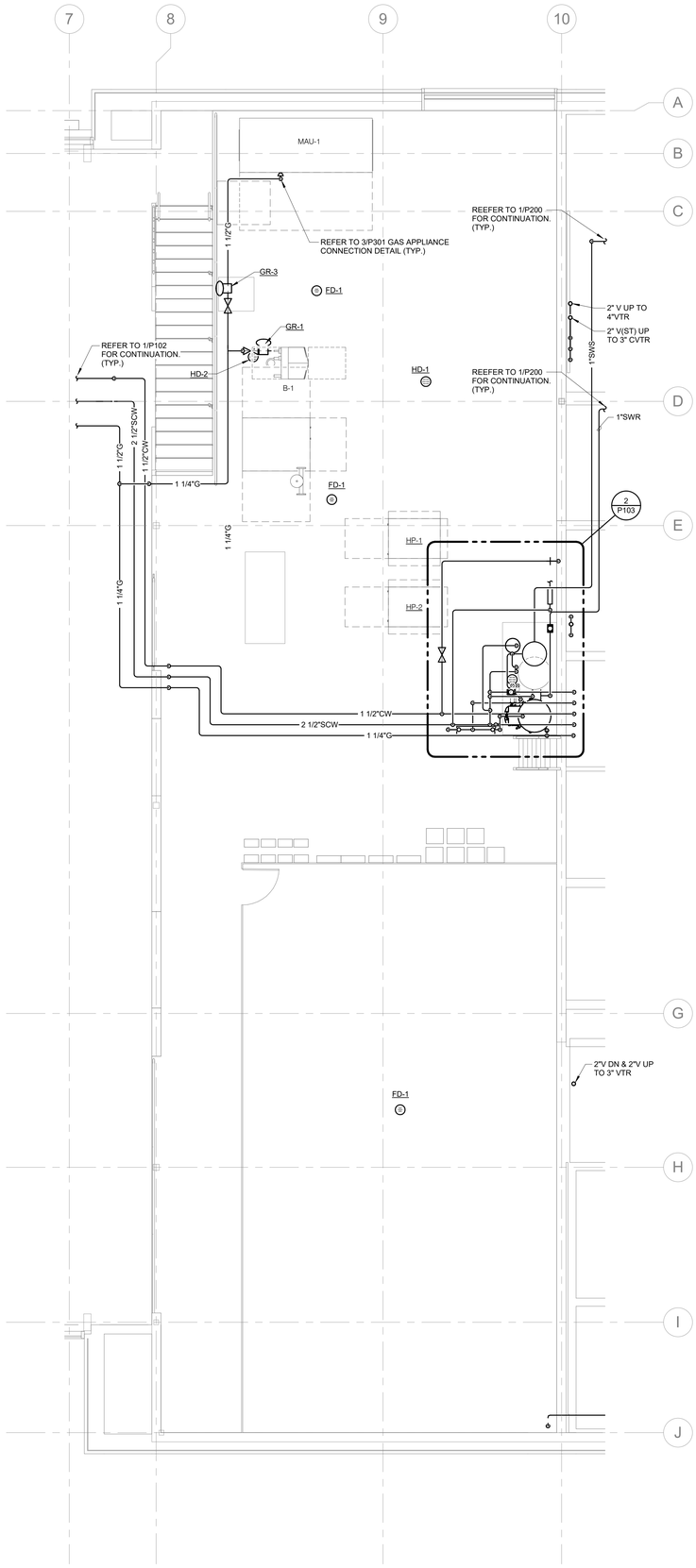

1 MEZZANINE PLAN - PLUMBING

1/4" = 1'-0"

OPN ARCHITECTS

301 N BROOM STREET #100
MADISON, WI 53703
608-819-0260 PHONE
www.opnarchitects.com
opn@opnarchitects.com

All reports, plans, specifications, computer files, field data, notes and other documents and instruments prepared by OPN Architects, Inc. as instruments of service shall remain the property of OPN Architects, Inc. OPN Architects, Inc. shall retain all common law, statutory and other reserved rights, including the copyright thereto.

© 2017 OPN Architects, Inc.

Owner

City of Madison Fire Department
314 W. Dayton St.
Madison, WI 53703

Project

Madison Fire Station 14
3201 Dairy Drive
Madison, WI 53718

Civil Engineer

Snyder & Associates, Inc
5010 Voges Rd
Madison WI, 53718
P. 608-838-0444

Structural Engineer

IMEG
1800 Deming Way #200
Middleton, WI 53562
P. 608-223-9600

Mechanical Engineer

IMEG
1800 Deming Way #200
Middleton, WI 53562
P. 608-223-9600

Electrical Engineer

IMEG
1800 Deming Way #200
Middleton, WI 53562
P. 608-223-9600

Key Plan

Sheet Issue Date

BID DOCUMENTS	11/03/17

Revision	Date

IMEG
1800 DEMING WAY, SUITE 200
MIDDLETON, WI 53562
608.223.9600 FAX: 608.836.0415
www.imegcorp.com
PROJECT # 17001140.00

IMEG CORP RESERVES PROPRIETARY RIGHTS, INCLUDING COPYRIGHTS, TO THIS DRAWING AND THE DATA SHOWN THEREON. SAID DRAWING AND/OR DATA ARE THE EXCLUSIVE PROPERTY OF IMEG CORP AND SHALL NOT BE USED OR REPRODUCED FOR ANY OTHER PROJECT WITHOUT THE EXPRESS WRITTEN APPROVAL AND PARTICIPATION OF IMEG CORP. © 2017 IMEG CORP.

REFERENCE SCALE IN INCHES
0 1 2 3

Drawing

MEZZANINE PLAN - PLUMBING

City of Madison Contract No. **8027**
OPN Project No. **17207000**

P103

KEYNOTES: #

1. SOLAR PANEL PROVIDED BY P.C. REFER TO WH-1 DESCIPTION AND PLUMBING SPECIFICATION 22 3 39 FOR REQUIREMENTS.

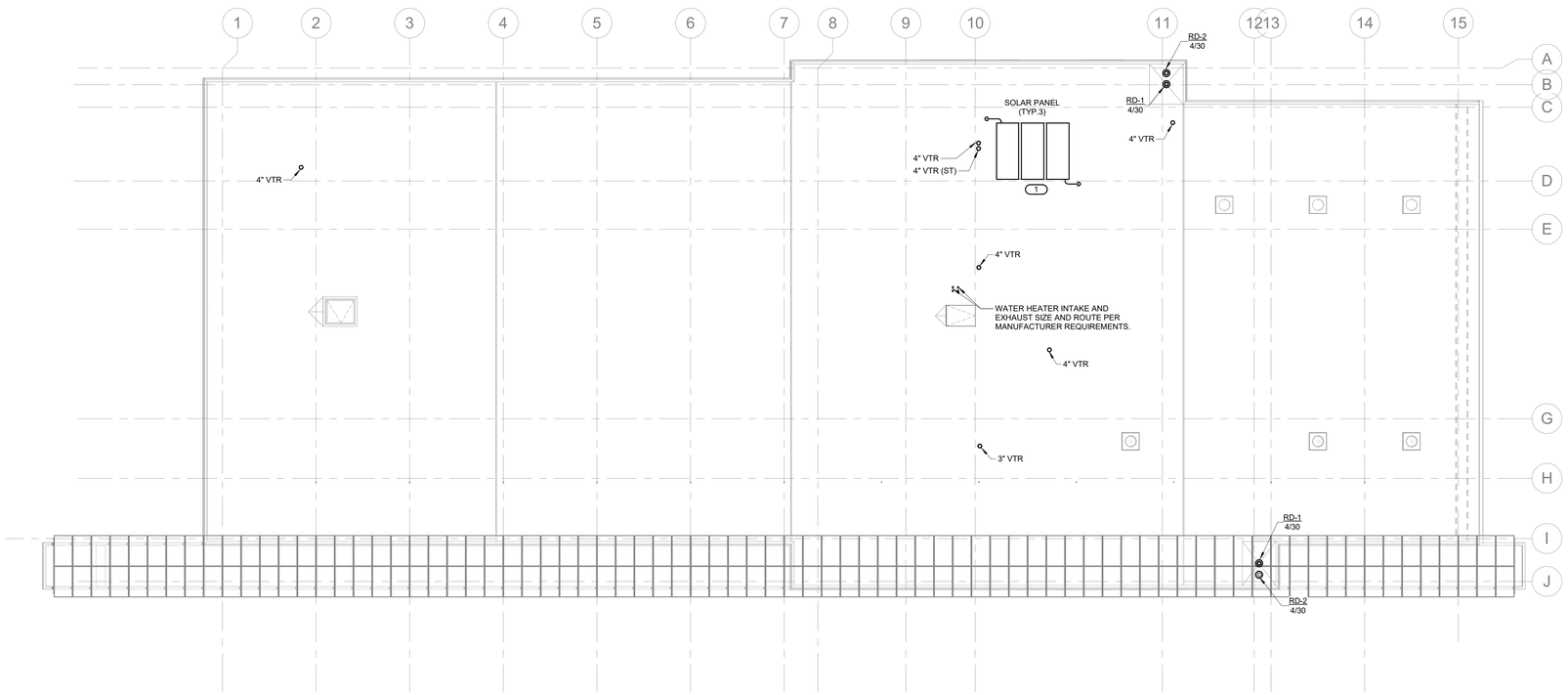

NORTH

1 ROOF PLAN - PLUMBING

3/32" = 1'-0"

OPN ARCHITECTS

301 N BROOM STREET #100
MADISON, WI 53703
608-819-0260 PHONE
www.opnarchitects.com
opn@opnarchitects.com

All reports, plans, specifications, computer files, field data, notes and other documents and instruments prepared by OPN Architects, Inc. as instruments of service shall remain the property of OPN Architects, Inc. OPN Architects, Inc. shall retain all common law, statutory and other reserved rights, including the copyright thereto.

© 2017 OPN Architects, Inc.

Owner

City of Madison Fire Department
314 W. Dayton St.
Madison, WI 53703

Project

Madison Fire Station 14
3201 Dairy Drive
Madison, WI 53718

Civil Engineer

Snyder & Associates, Inc
5010 Voges Rd
Madison WI, 53718
P. 608-838-0444

Structural Engineer

IMEG
1800 Deming Way #200
Middleton, WI 53562
P. 608-223-9600

Mechanical Engineer

IMEG
1800 Deming Way #200
Middleton, WI 53562
P. 608-223-9600

Electrical Engineer

IMEG
1800 Deming Way #200
Middleton, WI 53562
P. 608-223-9600

Key Plan

Sheet Issue Date

BID DOCUMENTS 11/03/17

Revision	Date

Drawing

ROOF PLAN - PLUMBING

City of Madison Contract No. **8027**
OPN Project No. **17207000**

P104

IMEG
1800 DEMING WAY, SUITE 200
MIDDLETON, WI 53562
608.223.9600 FAX: 608.836.0415
www.imegcorp.com
PROJECT # 170011400.00

IMEG CORP RESERVES PROPRIETARY RIGHTS, INCLUDING COPYRIGHTS, TO THIS DRAWING AND THE DATA SHOWN THEREON. SAID DRAWING AND/OR DATA ARE THE EXCLUSIVE PROPERTY OF IMEG CORP AND SHALL NOT BE USED OR REPRODUCED FOR ANY OTHER PROJECT WITHOUT THE EXPRESS WRITTEN APPROVAL AND PARTICIPATION OF IMEG CORP. © 2017 IMEG CORP.

REFERENCE SCALE IN INCHES
0 1 2 3

KEYNOTES: #

1. 1" HW AND 1" CW ROUTED TO COMMERCIAL WASHING MACHINE. PROVIDE BALL VALVES WITH 3/4" HOSE THREAD CONNECTIONS OUTSIDE OF THE WALL.
2. PROVIDE LT-1 RECESSED IN SLAB. PROVIDE AIR GAP ON DISCHARGE OF WASHING MACHINE DRAIN LINE INTO TROUGH.
3. INSTALL MECHANICAL GAS SHUTOFF VALVE IN GAS LINE. MECHANICAL GAS VALVE FURNISHED BY KITCHEN HOOD SUPPLIER. GAS VALVE CONTROLLED BY KITCHEN HOOD FIRE SUPPRESSION SYSTEM.
4. REFER TO 2/P200 SECTION FOR PLUMBING PIPING ROUTING ABOVE L.T. QUARTERS 125.
5. PROVIDE UB-1 AT REFRIGERATOR OR ICE MAKER.

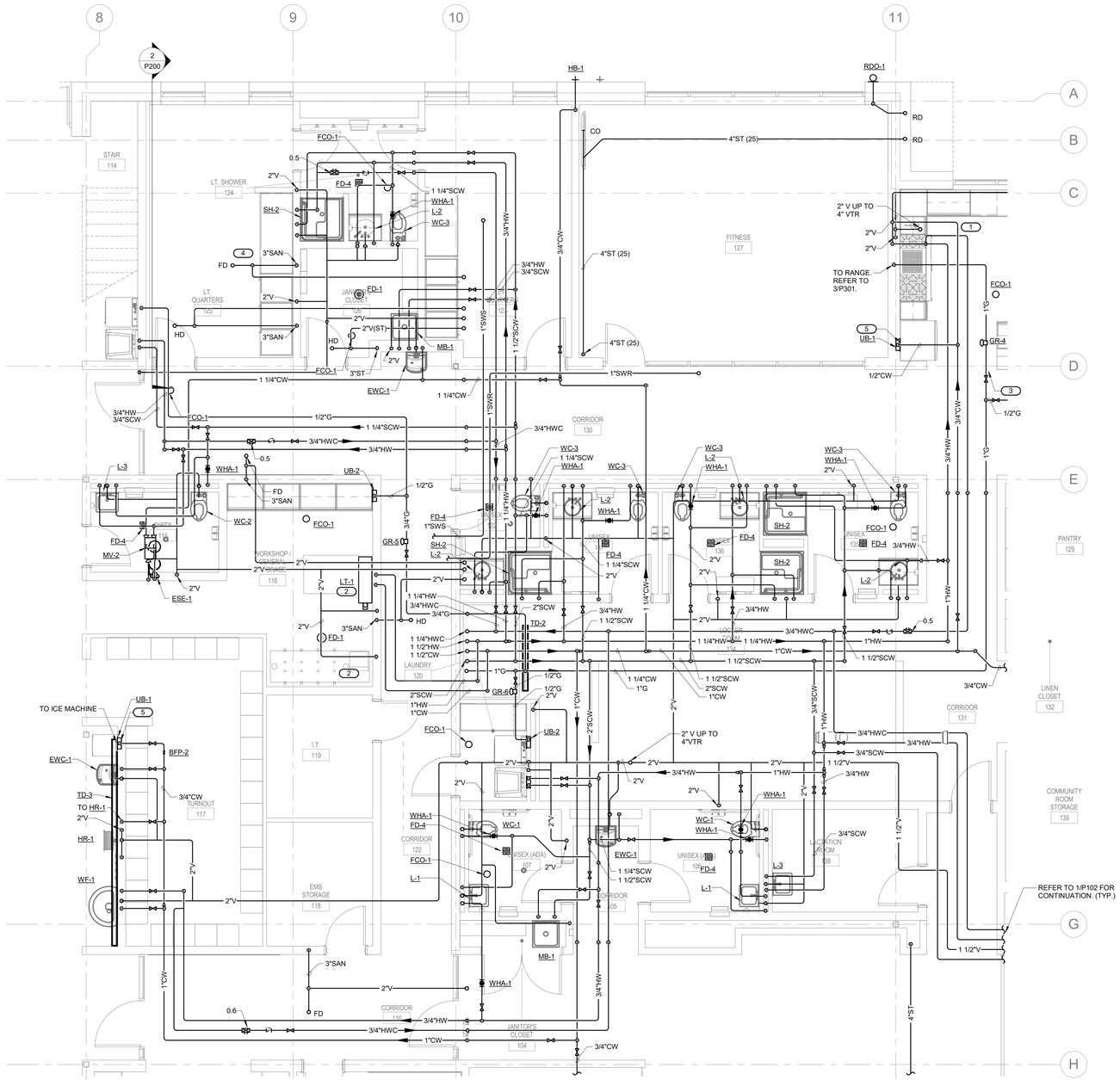

1 ENLARGED PLAN OF LEVEL 1 - PLUMBING

1/4" = 1'-0"

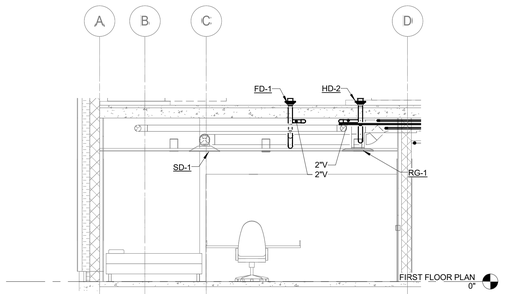

2 SECTION FOR LT. OFFICE 125

1/4" = 1'-0"

OPN ARCHITECTS
301 N BROOM STREET #100
MADISON, WI 53703
608-819-0260 PHONE
www.opnarchitects.com
opn@opnarchitects.com

All reports, plans, specifications, computer files, field data, notes and other documents and instruments prepared by OPN Architects, Inc. as instruments of service shall remain the property of OPN Architects, Inc. OPN Architects, Inc. shall retain all common law, statutory and other reserved rights, including the copyright thereto.

© 2017 OPN Architects, Inc.

Owner
City of Madison Fire Department
314 W. Dayton St.
Madison, WI 53703

Project
Madison Fire Station 14
3201 Dairy Drive
Madison, WI 53718

Civil Engineer
Snyder & Associates, Inc
5010 Voges Rd
Madison WI, 53718
P. 608-838-0444

Structural Engineer
IMEG
1800 Deming Way #200
Middleton, WI 53562
P. 608-223-9600

Mechanical Engineer
IMEG
1800 Deming Way #200
Middleton, WI 53562
P. 608-223-9600

Electrical Engineer
IMEG
1800 Deming Way #200
Middleton, WI 53562
P. 608-223-9600

Key Plan

Sheet Issue Date
BID DOCUMENTS 11/03/17

Revision Date

IMEG
1800 DEMING WAY, SUITE 200
MIDDLETON, WI 53562
608.223.9600 FAX: 608.836.0415
www.imegcorp.com
PROJECT # 17001140.00

IMEG CORP RESERVES PROPRIETARY RIGHTS, INCLUDING COPYRIGHTS, TO THIS DRAWING AND THE DATA SHOWN THEREON. SAID DRAWING AND/OR DATA ARE THE EXCLUSIVE PROPERTY OF IMEG CORP AND SHALL NOT BE USED OR REPRODUCED FOR ANY OTHER PROJECT WITHOUT THE EXPRESS WRITTEN APPROVAL AND PARTICIPATION OF IMEG CORP. © 2017 IMEG CORP.

REFERENCE SCALE IN INCHES
0 1 2 3

Drawing
ENLARGED PLAN - PLUMBING

City of Madison Contract No. **8027**
OPN Project No. **17207000**

P200

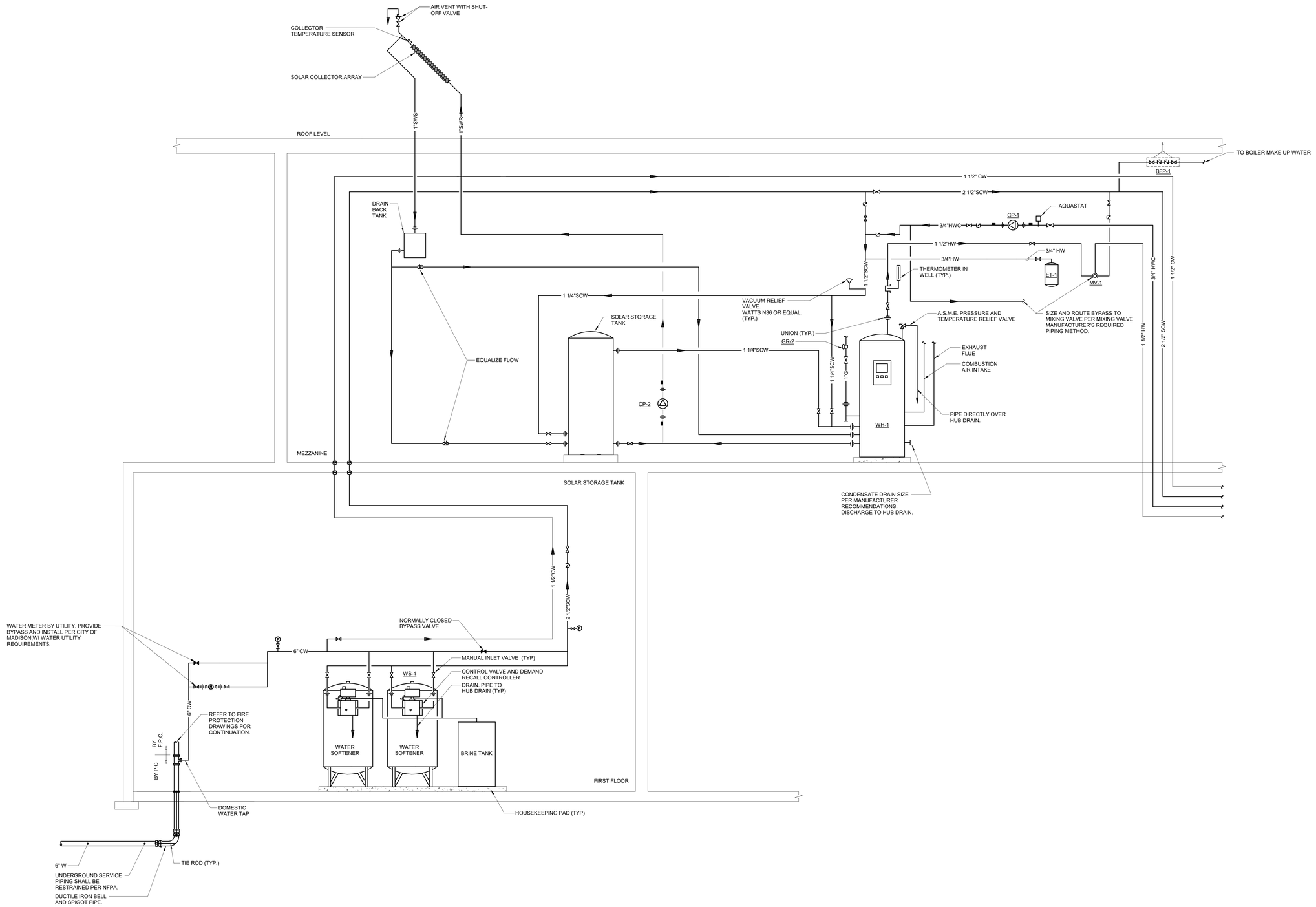

1 DOMESTIC WATER FLOW DIAGRAM - PLUMBING

12" = 1'-0"

OPN ARCHITECTS

301 N BROOM STREET #100
MADISON, WI 53703
608-819-0260 PHONE
www.opnarchitects.com
opn@opnarchitects.com

All reports, plans, specifications, computer files, field data, notes and other documents and instruments prepared by OPN Architects, Inc. as instruments of service shall remain the property of OPN Architects, Inc. OPN Architects, Inc. shall retain all common law, statutory and other reserved rights, including the copyright thereto.

© 2017 OPN Architects, Inc.

Owner

City of Madison Fire Department
314 W. Dayton St.
Madison, WI 53703

Project

Madison Fire Station 14
3201 Dairy Drive
Madison, WI 53718

Civil Engineer

Snyder & Associates, Inc
5010 Voges Rd
Madison WI, 53718
P. 608-838-0444

Structural Engineer

IMEG
1800 Deming Way #200
Middleton, WI 53562
P. 608-223-9600

Mechanical Engineer

IMEG
1800 Deming Way #200
Middleton, WI 53562
P. 608-223-9600

Electrical Engineer

IMEG
1800 Deming Way #200
Middleton, WI 53562
P. 608-223-9600

Key Plan

Sheet Issue Date
BID DOCUMENTS 11/03/17

Revision Date

IMEG
1800 DEMING WAY, SUITE 200
MIDDLETON, WI 53562
608.223.9600 FAX: 608.836.0415
www.imegcorp.com
PROJECT # 17001140.00

IMEG CORP RESERVES PROPRIETARY RIGHTS, INCLUDING COPYRIGHTS, TO THIS DRAWING AND THE DATA SHOWN THEREON. SAID DRAWING AND/OR DATA ARE THE EXCLUSIVE PROPERTY OF IMEG CORP AND SHALL NOT BE USED OR REPRODUCED FOR ANY OTHER PROJECT WITHOUT THE EXPRESS WRITTEN APPROVAL AND PARTICIPATION OF IMEG CORP. © 2017 IMEG CORP.

REFERENCE SCALE IN INCHES
0 1 2 3

Drawing

DOMESTIC WATER FLOW DIAGRAM - PLUMBING

City of Madison Contract No. **8027**
OPN Project No. **17207000**

P300

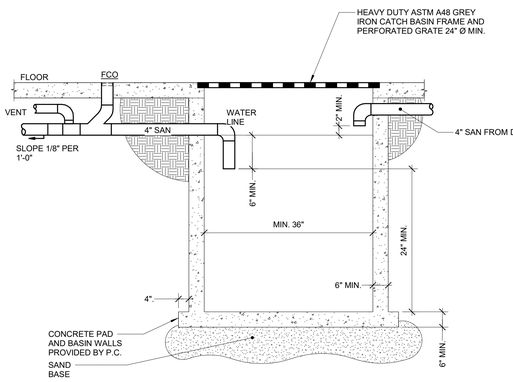

1 GARAGE CATCH BASIN

NO SCALE

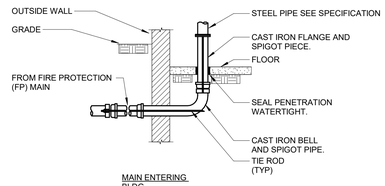

MAIN ENTERING BLDG.

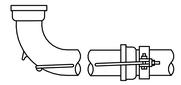

ANCHOR FOR LONG SPIGOT 1/4 BEND.

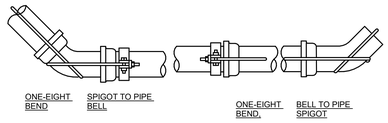

ANCHOR RODS

ROD AND CLAMP ANCHORAGE

PIPING NOMINAL SIZE (IN.)	CLAMP SIZE (IN.)	BOLT SIZE (IN.)	WASHER (IN.)		NUMBER OF RODS AND ROD SIZE(IN.) FOR ROD AND CLAMP ANCHORAGE					
					MECHANICAL JOINT			PUSH ON JOINT		
			CAST IRON	STEEL	90° 1/4 BEND	45° 1/8 BEND	TEE, HYDRANT CAP, PLUG	90° 1/4 BEND	45° 1/8 BEND	TEE, HYDRANT CAP, PLUG
4	1/2x2	5/8	5/8x3	1/2x3	2 3/4	2 3/4	2 3/4	2 3/4	2 3/4	2 3/4
6					2 3/4	2 3/4	2 3/4	2 3/4	2 3/4	2 3/4
8	5/8x2-1/2				4 3/4	2 3/4	4 3/4	4 3/4	2 3/4	4 3/4
10		7/8			6 3/4	4 3/4	4 3/4	4 7/8	4 7/8	4 7/8
12	5/8x3	1	3/4x 3-1/2	1/2x 3-1/2	8 3/4	6 3/4	6 3/4	4 1	4 1	4 1

NOTES:

1. AFTER INSTALLATION, PROTECT TIE RODS, BOLTS, NUTS, WASHERS AND CLAMPS AGAINST CORROSION WITH A HEAVY COAT OF ASPHALT MATERIAL.
2. THE LENGTH OF THE ROD REQUIRED WILL VARY WITH THE PIPE FITTING, AND MUST BE DETERMINED BY FIELD MEASUREMENT. IF THE DISTANCE BETWEEN THE JOINTS IS LESS THAN 12 FEET, EXTEND THE ANCHORAGE TO THE SECOND BELL.

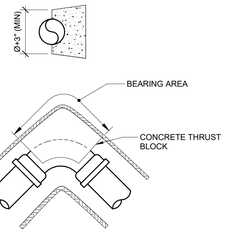

ONE-QUARTER BEND

THRUST BLOCKS

AREA OF BEARING FACE OF CONCRETE THRUST BLOCKS

PIPING NOMINAL SIZE (IN.)	MIN. SQ. FT.		
	CAST IRON AND DUCTILE IRON		
	1/4 BEND	1/8 BEND	TEES, PLUGS, CAPS, HYDRANTS
4	3	2	3
6	7	4	5
8	11	6	8
10	17	9	12
12	24	13	17

BASIS: 2,000 LB/SQ.FT. SOIL RESISTANCE.
250 PSI WATER PRESSURE.
CORRECTION FACTORS FOR OTHER SOILS:
SOFT CLAY.....4
SAND.....2
SAND&GRAVEL...1.33
SHALE.....0.4

2 UNDERGROUND WATER MAIN ANCHORING DETAIL

NO SCALE

NOTES:

1. BOTH THRUST BLOCKING AND ANCHOR RODS ARE REQUIRED.
2. REFER TO THE GOVERNING CODE AND NFPA 24 FOR ADDITIONAL REQUIREMENTS.

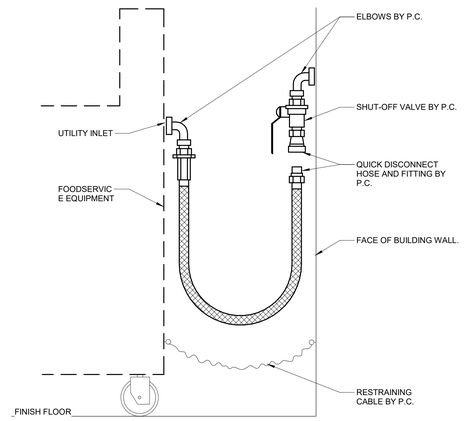

3 GAS APPLIANCE CONNECTION DETAIL

NO SCALE

NOTES:

1. VERIFY UTILITY INLET LOCATION ON KITCHEN APPLIANCE OR EQUIPMENT AND EXTEND PIPING AS REQUIRED TO ABOVE CONFIGURATION. GAS PIPING SHUTOFF VALVE LOCATION SHALL ALLOW KITCHEN APPLIANCE TO BE TIGHT TO WALL.

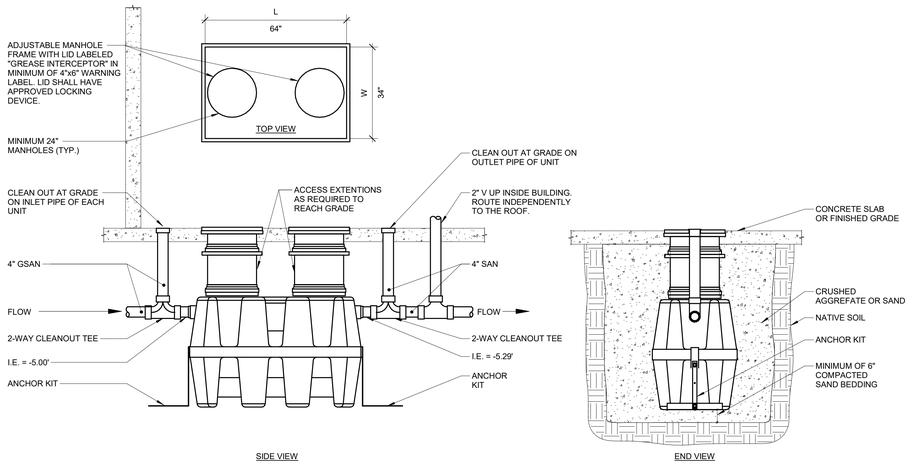

SIDE VIEW

END VIEW

4 GREASE INTERCEPTOR DETAIL (EXTERIOR)

NO SCALE

NOTES:

1. REFER TO MANUFACTURERS RECOMMENDATIONS FOR SPECIFIC VENTING REQUIREMENTS.

OPN ARCHITECTS

301 N BROOM STREET #100
MADISON, WI 53703
608-819-0260 PHONE
www.opnarchitects.com
opn@opnarchitects.com

All reports, plans, specifications, computer files, field data, notes and other documents and instruments prepared by OPN Architects, Inc. as instruments of service shall remain the property of OPN Architects, Inc. OPN Architects, Inc. shall retain all common law, statutory and other reserved rights, including the copyright thereto.

© 2017 OPN Architects, Inc.

Owner

City of Madison Fire Department
314 W. Dayton St.
Madison, WI 53703

Project

Madison Fire Station 14
3201 Dairy Drive
Madison, WI 53718

Civil Engineer

Snyder & Associates, Inc
5010 Voges Rd
Madison WI, 53718
P. 608-838-0444

Structural Engineer

IMEG
1800 Deming Way #200
Middleton, WI 53562
P. 608-223-9600

Mechanical Engineer

IMEG
1800 Deming Way #200
Middleton, WI 53562
P. 608-223-9600

Electrical Engineer

IMEG
1800 Deming Way #200
Middleton, WI 53562
P. 608-223-9600

Key Plan

Sheet Issue Date
BID DOCUMENTS 11/03/17

Revision Date

IMEG
1800 DEMING WAY, SUITE 200
MIDDLETON, WI 53562
608.223.9600 FAX: 608.836.0415
www.imegcorp.com
PROJECT # 17001140.00

IMEG CORP RESERVES PROPRIETARY RIGHTS, INCLUDING COPYRIGHTS, TO THIS DRAWING AND THE DATA SHOWN THEREON. SAID DRAWING AND/OR DATA ARE THE EXCLUSIVE PROPERTY OF IMEG CORP AND SHALL NOT BE USED OR REPRODUCED FOR ANY OTHER PURPOSE WITHOUT THE EXPRESS WRITTEN APPROVAL AND PARTICIPATION OF IMEG CORP. © 2017 IMEG CORP.

REFERENCE SCALE IN INCHES
0 1 2 3

Drawing
DETAILS - PLUMBING

City of Madison Contract No. **8027**
OPN Project No. **17207000**

P301

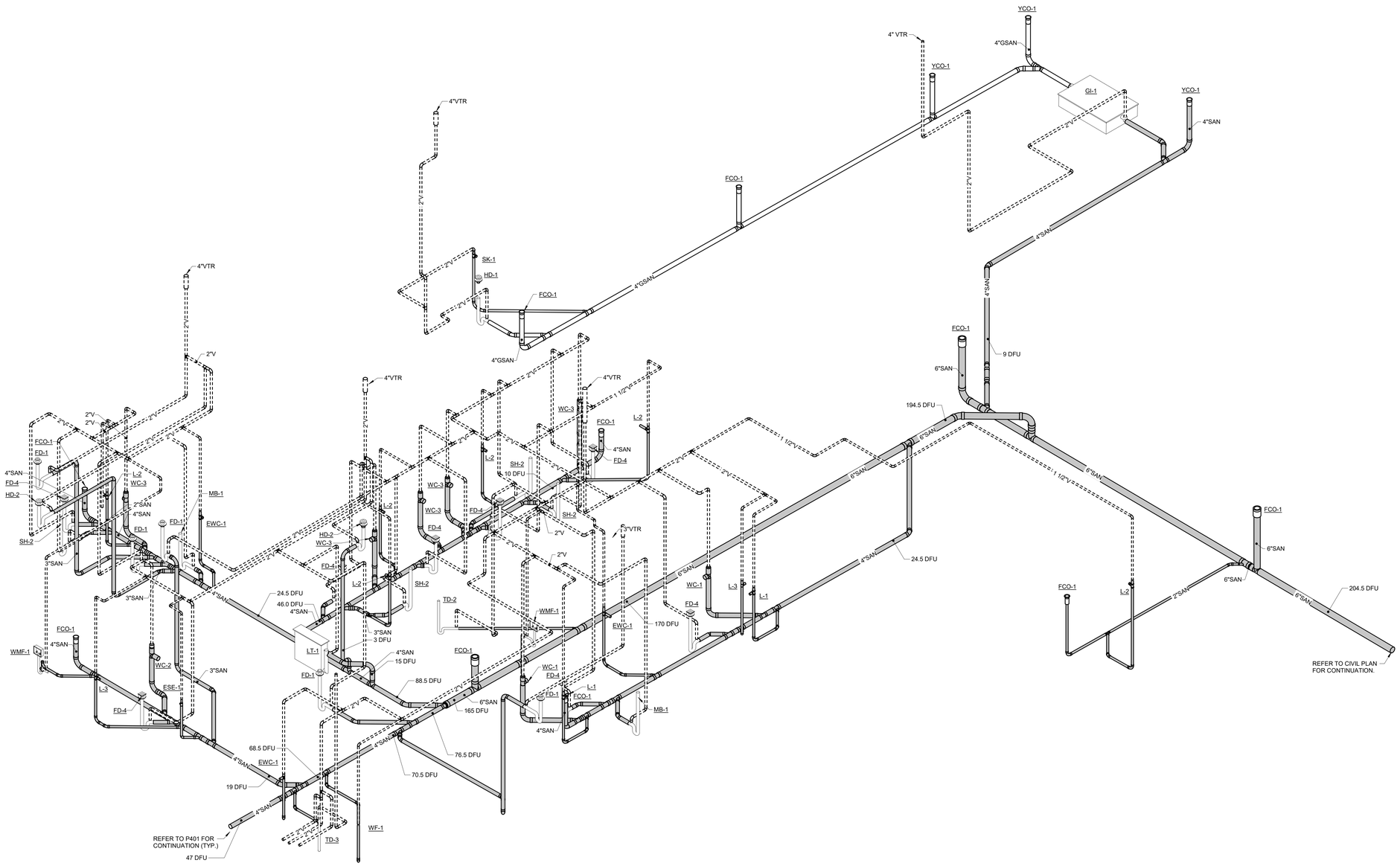

1 SAN-VENT RISER DIAGRAM - FIRST FLOOR - SOUTH - PLUMBING

OPN ARCHITECTS
301 N BROOM STREET #100
MADISON, WI 53703
608-819-0260 PHONE
www.opnarchitects.com
opn@opnarchitects.com

All reports, plans, specifications, computer files, field data, notes and other documents and instruments prepared by OPN Architects, Inc. as instruments of service shall remain the property of OPN Architects, Inc. OPN Architects, Inc. shall retain all common law, statutory and other reserved rights, including the copyright thereto.

© 2017 OPN Architects, Inc.

Owner

City of Madison Fire Department
314 W. Dayton St.
Madison, WI 53703

Project

Madison Fire Station 14
3201 Dairy Drive
Madison, WI 53718

Civil Engineer

Snyder & Associates, Inc
5010 Voges Rd
Madison WI, 53718
P. 608-838-0444

Structural Engineer

IMEG
1800 Deming Way #200
Middleton, WI 53562
P. 608-223-9600

Mechanical Engineer

IMEG
1800 Deming Way #200
Middleton, WI 53562
P. 608-223-9600

Electrical Engineer

IMEG
1800 Deming Way #200
Middleton, WI 53562
P. 608-223-9600

Key Plan

Sheet Issue Date

BID DOCUMENTS	11/03/17

Revision | Date

IMEG
1800 DEMING WAY, SUITE 200
MIDDLETON, WI 53562
608.223.9600 FAX: 608.836.0415
www.imegcorp.com
PROJECT # 17001140.00

IMEG CORP RESERVES PROPRETARY RIGHTS, INCLUDING COPYRIGHTS, TO THIS DRAWING AND THE DATA SHOWN THEREON. SAID DRAWING AND/OR DATA ARE THE EXCLUSIVE PROPERTY OF IMEG CORP AND SHALL NOT BE USED OR REPRODUCED FOR ANY OTHER PROJECT WITHOUT THE EXPRESS WRITTEN APPROVAL AND PARTICIPATION OF IMEG CORP. © 2017 IMEG CORP.

REFERENCE SCALE IN INCHES
0 1 2 3

Drawing

RISER DIAGRAM - SOUTH - PLUMBING

City of Madison Contract No. **8027**
OPN Project No. **17207000**

P400

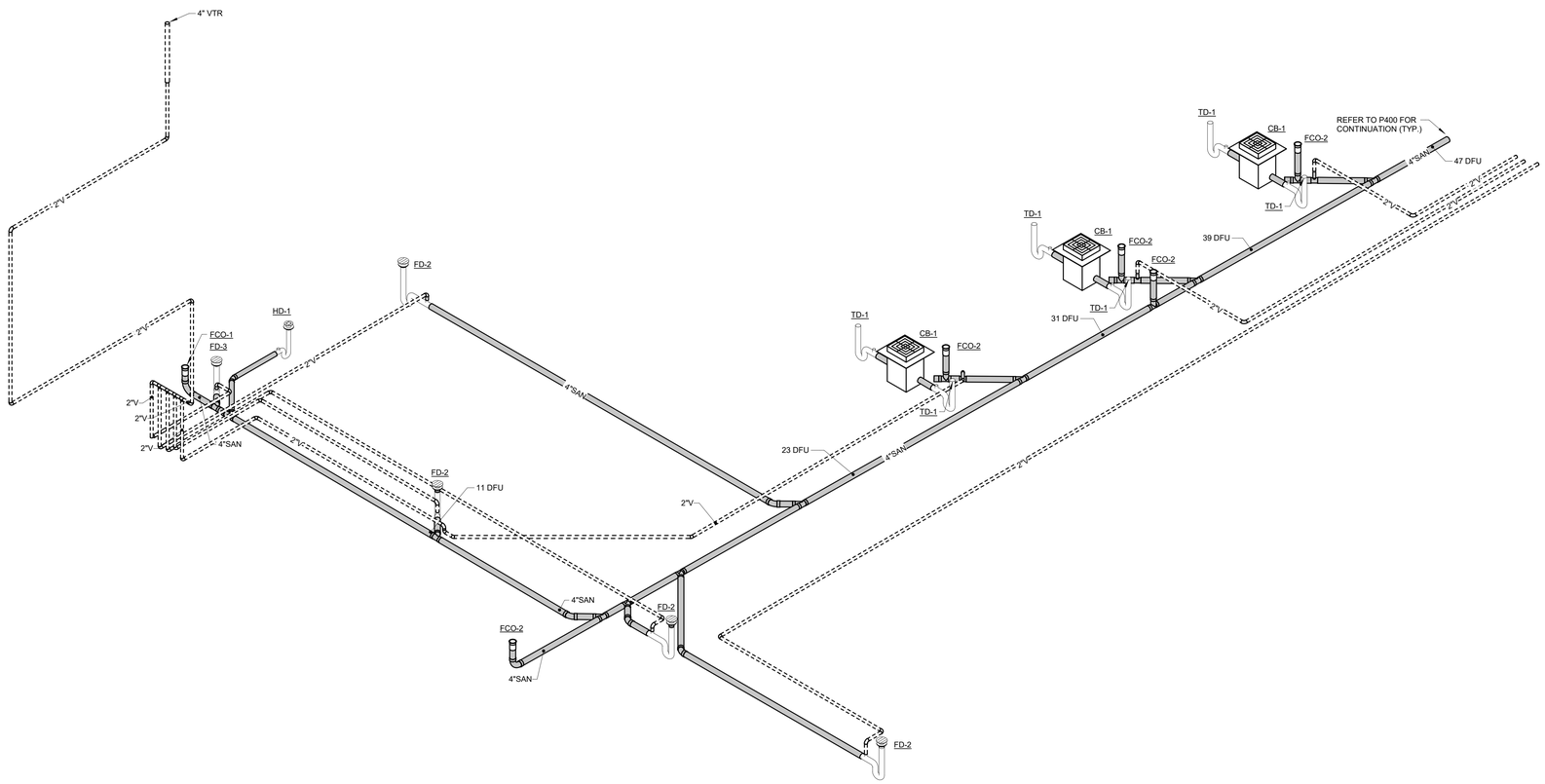

1 SAN-VENT RISER DIAGRAM - FIRST FLOOR - NORTH - PLUMBING

NO SCALE

OPN ARCHITECTS

301 N BROOM STREET #100
MADISON, WI 53703
608-819-0260 PHONE
www.opnarchitects.com
opn@opnarchitects.com

All reports, plans, specifications, computer files, field data, notes and other documents and instruments prepared by OPN Architects, Inc. as instruments of service shall remain the property of OPN Architects, Inc. OPN Architects, Inc. shall retain all common law, statutory and other reserved rights, including the copyright thereto.

© 2017 OPN Architects, Inc.

Owner

City of Madison Fire Department
314 W. Dayton St.
Madison, WI 53703

Project

Madison Fire Station 14
3201 Dairy Drive
Madison, WI 53718

Civil Engineer

Snyder & Associates, Inc
5010 Voges Rd
Madison WI, 53718
P. 608-838-0444

Structural Engineer

IMEG
1800 Deming Way #200
Middleton, WI 53562
P. 608-223-9600

Mechanical Engineer

IMEG
1800 Deming Way #200
Middleton, WI 53562
P. 608-223-9600

Electrical Engineer

IMEG
1800 Deming Way #200
Middleton, WI 53562
P. 608-223-9600

Key Plan

Sheet Issue Date

BID DOCUMENTS	11/03/17

Revision Date

IMEG
1800 DEMING WAY, SUITE 200
MIDDLETON, WI 53562
608.223.9600 FAX: 608.836.0415
www.imegcorp.com
PROJECT # 17001140.00

IMEG CORP RESERVES PROPRIETARY RIGHTS, INCLUDING COPYRIGHTS, TO THIS DRAWING AND THE DATA SHOWN THEREON. SAID DRAWING AND/OR DATA ARE THE EXCLUSIVE PROPERTY OF IMEG CORP AND SHALL NOT BE USED OR REPRODUCED FOR ANY OTHER PROJECT WITHOUT THE EXPRESS WRITTEN APPROVAL AND PARTICIPATION OF IMEG CORP. © 2017 IMEG CORP.

REFERENCE SCALE IN INCHES
0 1 2 3

Drawing

RISER DIAGRAM - NORTH - PLUMBING

City of Madison Contract No. **8027**
OPN Project No. **17207000**

P401

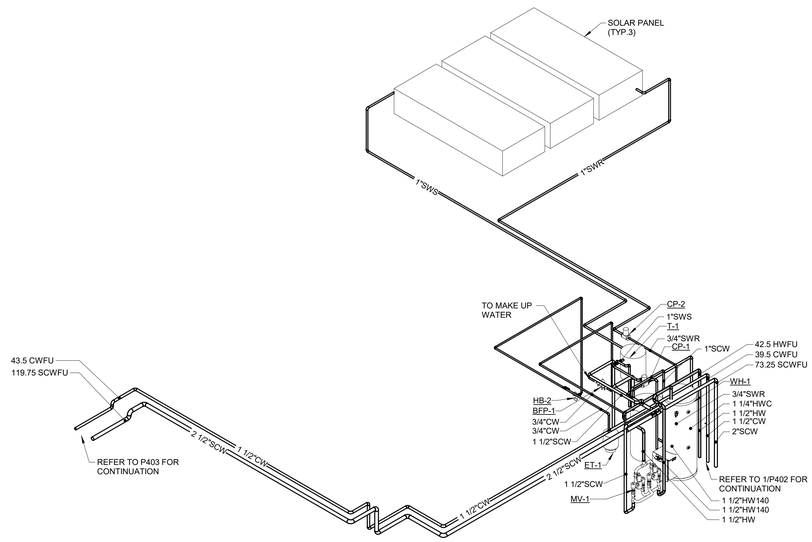

2 DOMESTIC RISER DIAGRAM - MEZZANINE FLOOR - SOUTH - PLUMBING

NO SCALE

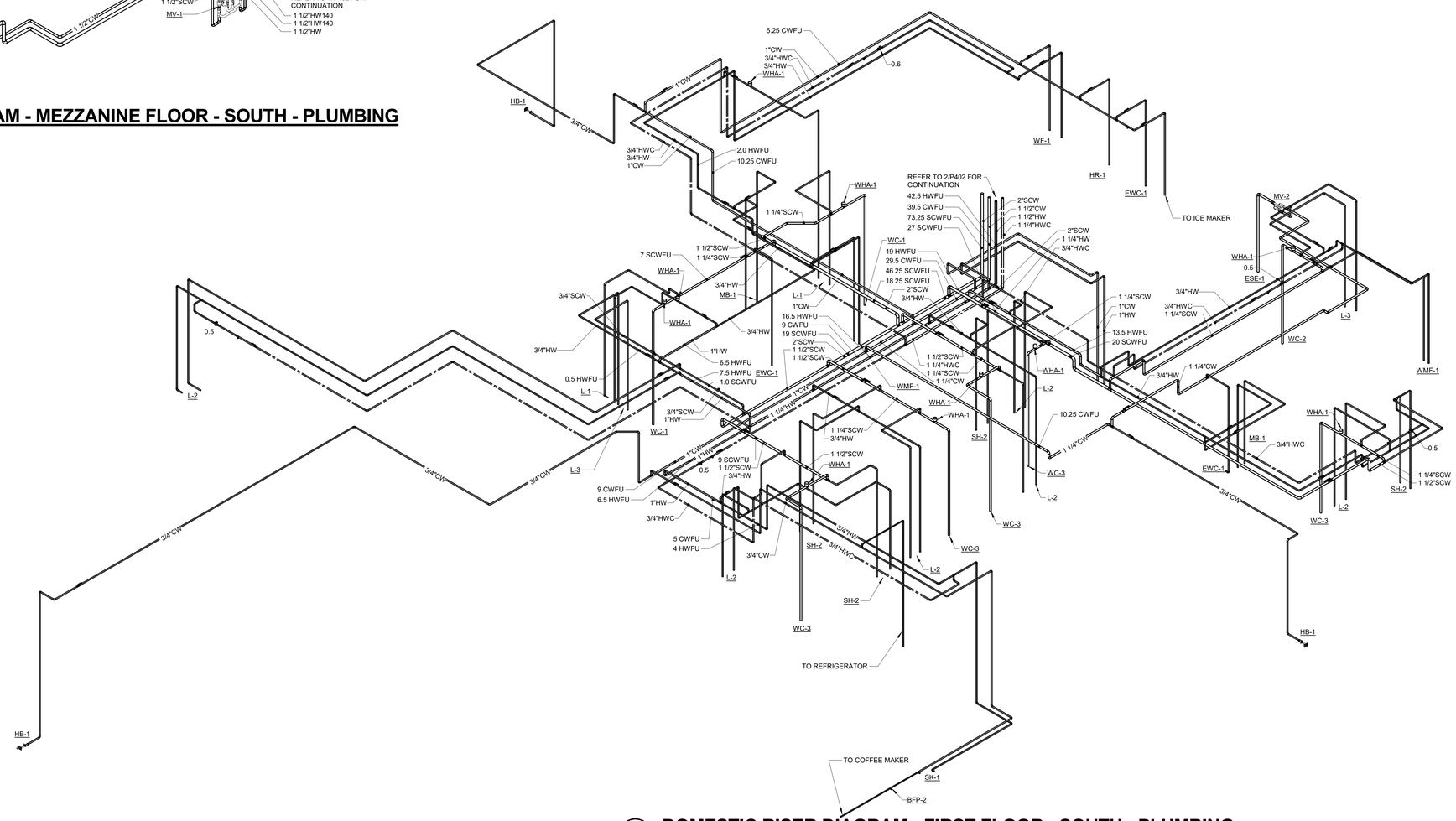

1 DOMESTIC RISER DIAGRAM - FIRST FLOOR - SOUTH - PLUMBING

NO SCALE

OPN ARCHITECTS

301 N BROOM STREET #100
MADISON, WI 53703
608-819-0260 PHONE
www.opnarchitects.com
opn@opnarchitects.com

All reports, plans, specifications, computer files, field data, notes and other documents and instruments prepared by OPN Architects, Inc. as instruments of service shall remain the property of OPN Architects, Inc. OPN Architects, Inc. shall retain all common law, statutory and other reserved rights, including the copyright thereto.

© 2017 OPN Architects, Inc.

Owner

City of Madison Fire Department
314 W. Dayton St.
Madison, WI 53703

Project

Madison Fire Station 14
3201 Dairy Drive
Madison, WI 53718

Civil Engineer

Snyder & Associates, Inc
5010 Voges Rd
Madison WI, 53718
P. 608-838-0444

Structural Engineer

IMEG
1800 Deming Way #200
Middleton, WI 53562
P. 608-223-9600

Mechanical Engineer

IMEG
1800 Deming Way #200
Middleton, WI 53562
P. 608-223-9600

Electrical Engineer

IMEG
1800 Deming Way #200
Middleton, WI 53562
P. 608-223-9600

Key Plan

Sheet Issue Date	
BID DOCUMENTS	11/03/17

Revision	Date

IMEG
1800 DEMING WAY, SUITE 200
MIDDLETON, WI 53562
608.223.9600 FAX: 608.836.0415
www.imegcorp.com
PROJECT # 17001140.00

IMEG CORP RESERVES PROPRIETARY RIGHTS, INCLUDING COPYRIGHTS, TO THIS DRAWING AND THE DATA SHOWN THEREON. SAID DRAWING AND/OR DATA ARE THE EXCLUSIVE PROPERTY OF IMEG CORP AND SHALL NOT BE USED OR REPRODUCED FOR ANY OTHER PROJECT WITHOUT THE EXPRESS WRITTEN APPROVAL AND PARTICIPATION OF IMEG CORP. © 2017 IMEG CORP.

REFERENCE SCALE IN INCHES
0 1 2 3

Drawing

RISER DIAGRAM - SOUTH - PLUMBING

City of Madison Contract No. **8027**
OPN Project No. **17207000**

P402

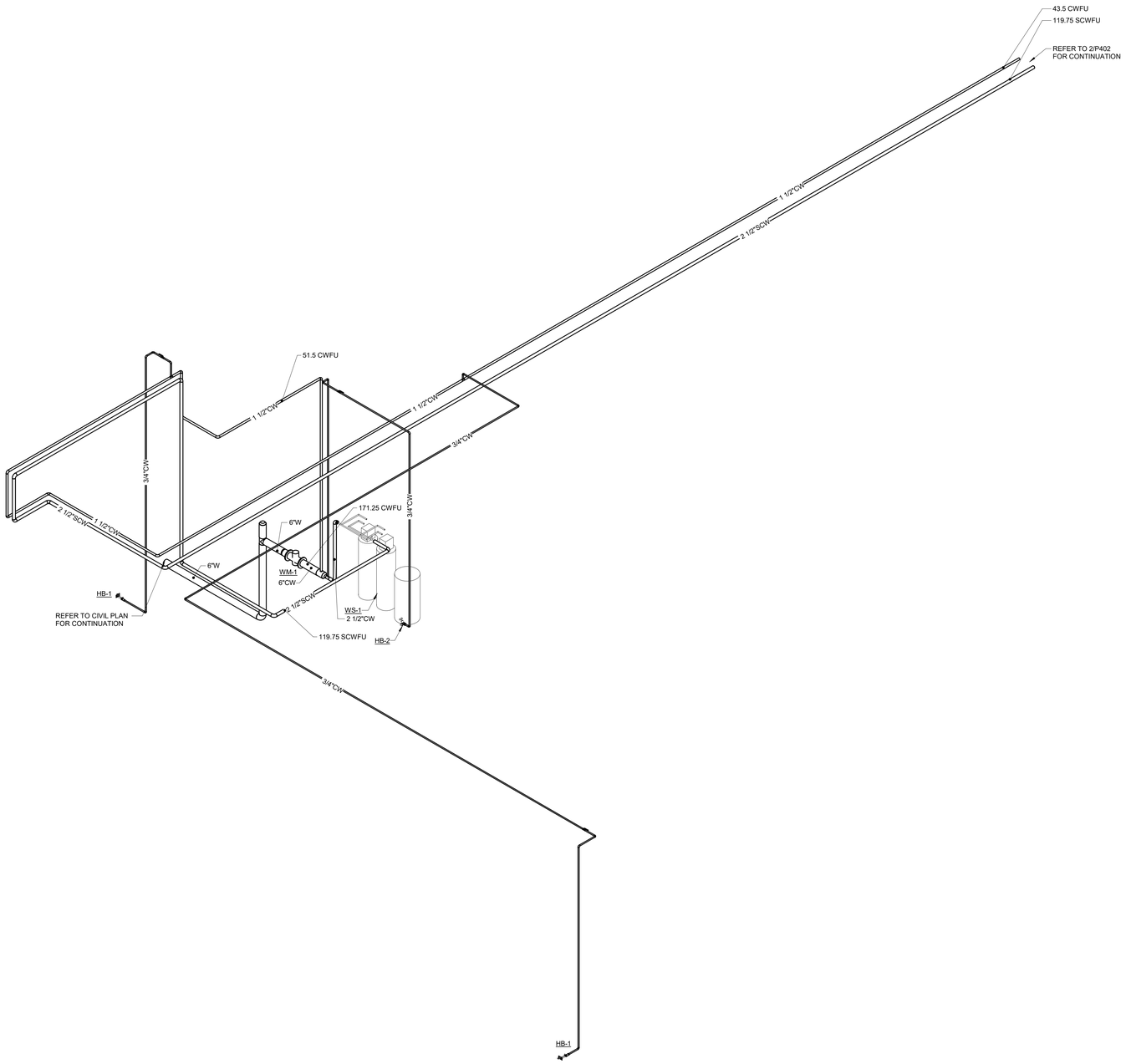

1 DOMESTIC RISER DIAGRAM - FIRST FLOOR - NORTH - PLUMBING

NO SCALE

OPN ARCHITECTS

301 N BROOM STREET #100
MADISON, WI 53703
608-819-0260 PHONE
www.opnarchitects.com
opn@opnarchitects.com

All reports, plans, specifications, computer files, field data, notes and other documents and instruments prepared by OPN Architects, Inc. as instruments of service shall remain the property of OPN Architects, Inc. OPN Architects, Inc. shall retain all common law, statutory and other reserved rights, including the copyright thereto.

© 2017 OPN Architects, Inc.

Owner

City of Madison Fire Department
314 W. Dayton St.
Madison, WI 53703

Project

Madison Fire Station 14
3201 Dairy Drive
Madison, WI 53718

Civil Engineer

Snyder & Associates, Inc
5010 Voges Rd
Madison WI, 53718
P. 608-838-0444

Structural Engineer

IMEG
1800 Deming Way #200
Middleton, WI 53562
P. 608-223-9600

Mechanical Engineer

IMEG
1800 Deming Way #200
Middleton, WI 53562
P. 608-223-9600

Electrical Engineer

IMEG
1800 Deming Way #200
Middleton, WI 53562
P. 608-223-9600

Key Plan

Sheet Issue Date

BID DOCUMENTS 11/03/17

Revision Date

IMEG
1800 DEMING WAY, SUITE 200
MIDDLETON, WI 53562
608.223.9600 FAX: 608.836.0415
www.imegcorp.com
PROJECT # 1700114I.00

IMEG CORP RESERVES PROPRIETARY RIGHTS, INCLUDING COPYRIGHTS, TO THIS DRAWING AND THE DATA SHOWN THEREON. SAID DRAWING AND/OR DATA ARE THE EXCLUSIVE PROPERTY OF IMEG CORP AND SHALL NOT BE USED OR REPRODUCED FOR ANY OTHER PROJECT WITHOUT THE EXPRESS WRITTEN APPROVAL AND PARTICIPATION OF IMEG CORP. © 2017 IMEG CORP.

REFERENCE SCALE IN INCHES

0 1 2 3

Drawing

RISER DIAGRAM - NORTH - PLUMBING

City of Madison Contract No. **8027**
OPN Project No. **17207000**

P403

PLUMBING FIXTURE SCHEDULE

TAG NAME	DESCRIPTION	MANF. & MODEL
BFP-1	BACK FLOW PREVENTER - REDUCED PRESSURE ZONE, LEAD FREE BRONZE OR STAINLESS STEEL CONSTRUCTION, SIZE SAME AS PIPE, NON-CORROSIVE INTERNAL PARTS, STAINLESS STEEL SPRINGS, DIFFERENTIAL PRESSURE RELIEF VALVE BETWEEN SPRING-LOADED CHECK VALVES, SHUT-OFF VALVES ON INLET AND OUTLET OF UNIT, BALL STYLE SHUTOFF VALVES FOR 3/4"-2" AND GATE STYLE VALVES FOR 2 1/2"-10", AIR GAP DRAIN FITTING, TEST PORTS WITH SHUT-OFF VLVES, RATED FOR 175 PSI AT 33°F TO 140°F. 15 PSI (MAXIMUM) PRESSURE DROP AT 10 FPS, FACTORY TESTED, ALL PARTS TO BE SERVICEABLE WITHOUT REMOVING UNIT FROM LINE, APPROVED BY USC FCCC & HR, AWWA C511-92, ASSE 1013, IAPMO AND SBCCI LISTED. MOUNT WITHIN 60" OF FINISHED FLOOR. PROVIDE AND INSTALL BRONZE OR EPOXY COATED STRAINER UPSTREAM OF EACH UNIT AND ADDITIONAL VALVE UPSTREAM OF EACH STRAINER. FLOW PRESSURE DROP CURVES SHALL BE SUBMITTED.	APOLLO (RPLF4A), WATTS (LF919 / 994), WILKINS (975XL2 / 375AST)
BFP-2	BACK FLOW PREVENTER - DUAL CHECK WITH ATMOSPHERIC PORT, LEAD FREE STAINLESS STEEL BODY, STRAINER, HEAVY DUTY FDA APPROVED RUBBER DIAPHRAGMS, 3/8" SIZE, RATED FOR 150 PSI AT 33°F TO 130°F, APPROVED BY ASSE 1022. PROVIDE 3/8" DRAINAGE TUBING FROM DISCHARGE PORT TO NEARBY DRAIN.	WATTS (SD-3), WILKINS (740)
CB-1	CATCH BASIN - REFER TO DETAILS SHEET FOR REQUIREMENTS.	N/A
CP-1	CIRCULATING PUMP - VARIABLE SPEED CONTROLLER WITH SETTINGS TO ADJUST AND MAINTAIN A CONSTANT: SPEED, FIXED PRESSURE, OR PROPORTIONAL PRESSURE. LEAD FREE BRONZE OR STAINLESS STEEL CONSTRUCTION, PERMANENTLY LUBRICATED BEARINGS, MECHANICAL SEAL, OIL LUBRICATED, ECM MOTOR WITH INTEGRATED VARIABLE SPEED CONTROL, FLANGED CONNECTIONS, RATED FOR 125 PSIG AT 225°F, UL LISTED. 4 GPM @ 10 FEET OF HEAD. MOTOR SHALL BE 0.65 AMPS. ELECTRICAL REQUIREMENTS - 115V, 1 PHASE HARD WIRED AQUASTAT - LINE VOLTAGE, ADJUSTABLE SETTING OF 90-180°F WITH STRAP-ON REMOTE SENSOR BULB, UL LISTED. PROVIDE WITH TRANSFORMER IF REQUIRED. INSTALL PER MANUFACTURERS INSTRUCTIONS.	PUMP - GRUNDFOS (ALPHA SERIES), B&G (ECOCIRC SERIES), ARMSTRONG (COMPASS 20-20 SS SERIES) AQUASTAT - HONEYWELL, WHITE-RODGERS, JOHNSON CONTROLS, SAME AS PUMP MANUFACTURER
CP-2	SOLAR CIRCULATING PUMP - VARIABLE SPEED CONTROLLER WITH SETTINGS TO ADJUST AND MAINTAIN A CONSTANT: SPEED, FIXED PRESSURE, OR PROPORTIONAL PRESSURE. LEAD FREE BRONZE OR STAINLESS STEEL CONSTRUCTION, PERMANENTLY LUBRICATED SEALED BEARINGS, MECHANICAL SEAL, OIL LUBRICATED, ECM MOTOR WITH INTEGRATED VARIABLE SPEED CONTROL, FLANGED CONNECTIONS, RATED FOR 125 PSIG AT 225°F, UL LISTED. APPROXIMATE FLOW RATE OF 3 GPM. FINAL FLOW RATE AND HEAD DETERMINED BY SOLAR COLLECTOR SUPPLIER. ELECTRICAL REQUIREMENTS - 115V, 1 PHASE HARD WIRED PUMP SHALL BE CONTROLLED BY SOLAR COLLECTOR CONTROLLER. REFER TO SPECIFICATION 22 33 39 FOR ADDITIONAL REQUIREMENTS.	PUMP - GRUNDFOS (ALPHA SERIES), B&G (ECOCIRC SERIES), ARMSTRONG (COMPASS 20-20 SS SERIES)
ESE-1	EMERGENCY SHOWER & EYEWAFCE WASH STANDALONE, COMBINATION UNIT, RECESSED EYEWASH AND EXPOSED SHOWER HEAD, STAINLESS STEEL SHOWER HEAD, BRASS/BRONZE STAY OPEN BALL VALVE, RECESSED STAINLESS STEEL SHOWER PULL HANDLE. RECESSED STAINLESS STEEL 16 GAUGE EYEWASH COVER AND DRAIN PAN, EYEWASH SHALL DRAIN BACK INTO INTERNALLY COLLECTED PAN WITH DIRECT CONNECTION TO SANITARY WASTE PIPING, EYE/FACE WASH SHALL BE ACTIVATED BY PULLING COVER/DRAIN PAN DOWN WITH HANDLE, EYE/FACE WASH SHALL HAVE PLASTIC SPRAY HEADS WITH CAPS AND RETAINING CHAINS/STRAPS, INTEGRAL FLOW CONTROL FITTINGS, STAINLESS STEEL SUPPLY PIPING AND FITTINGS, UNIVERSAL IDENTIFICATION SIGN, ANSI Z358.1-2009 COMPLIANT. MINIMUM FLOW RATE OF SHOWER SHALL BE 20 GPM AT 30 PSI. MINIMUM FLOW RATE OF EYE/FACE WASH SHALL BE 3.0 GPM AT 30 PSI. ACTIVATION TIME SHALL BE 1 SECOND OR LESS. BRASS/BRONZE PIPING, FITTINGS, AND VALVES SHALL BE CHROME-PLATED OR CHEMICAL-RESISTANT POWDER COATED. MOUNT SHOWER HEAD, SHOWER ACTIVATION HANDLE, AND EYE/FACE WASH OUTLET HEADS IN COMPLIANCE WITH LATEST A.D.A. AND ANSI 117.1 STANDARDS.	EMERGENCY SHOWER - GUARDIAN (GBF2150), BRADLEY (S19345 SERIES), ACORN SAFETY (S3160 SERIES), HAWS (8356WCC SERIES), SPEAKMAN (SE-575-DP-238)
ET-1	EXPANSION TANK - WELDED BLACK STEEL CONSTRUCTION, GUARANTEED AIRTIGHT AND LEAKPROOF, STAINLESS STEEL SYSTEM CONNECTION, HEAVY DUTY BUTYL DIAPHRAGM AND RIGID POLYPROPYLENE LINER MECHANICALLY BONDED TO TANK TO PROVIDE A 100% NON-CORROSIVE WATER RESERVOIR, DIAPHRAGM AND LINER SHALL BE APPROVED FOR USE IN POTABLE WATER SYSTEMS, ALL WETTED COMPONENTS OF FDA APPROVED MATERIALS. PROVIDE STANDARD SCHRADER AIR VALVE FOR FIELD CHARGING. TANK SHALL COMPLY WITH FEDERAL ACT S.3874. TANK SHALL HAVE A WORKING TEMPERATURE OF 200°F AND A WORKING PRESSURE OF 125 PSIG. MINIMUM TANK VOLUME TO BE 10 GALLONS, MINIMUM ACCEPTING VOLUME TO BE 6 GALLONS. FACTORY PRE-CHARGED FOR SHIPPING. FIELD CHARGE TANK TO 55 PSIG.	AMTROL (THERM-X-TROL), B&G (PT), ELBI (DT), TACO (PAX SERIES), WATTS (DETA), WESSELS (TX)
EWC-1	ELECTRIC WATER COOLER - WALL HUNG, 18 GAUGE STAINLESS STEEL CABINET AND NON-SPLASH BASIN WITH STAINLESS STEEL FINISH, STREAM PROJECTOR WITH PROTECTIVE HOOD, PUSH BAR OR LEVER OPERATING CONTROLS ON FRONT AND SIDES, BUILT-IN FLOW REGULATOR, PLASTIC P-TRAP ASSEMBLY, ADJUSTABLE THERMOSTAT, MOUNTING ACCESSORIES, TANK DRAIN AND ANGLE STOPS, HERMETIC COMPRESSOR TO OPERATE ON HFC-134a REFRIGERANT. COMPLIANT TO LATEST ANSI A117.1 AND ADA STANDARDS. UNIT SHALL COMPLY WITH FEDERAL ACT S.3874. BOTTLE FILLING STATION - UNIT MOUNTED, STAINLESS STEEL CONSTRUCTION AND FINISH, INTEGRAL DRAIN, SENSOR OPERATED WITH AUTOMATIC SHUTOFF, REPLACEABLE LEAD-CHLORINE-TASTE-ODOR WATER FILTER, BOTTLE COUNTER. UNIT SHALL PROVIDE 8.0 GPH OF WATER FROM 80°F TO 50°F AT 90°F AMBIENT. WATER SYSTEM SHALL BE OF LEAD FREE CONSTRUCTION. TANK SHALL BE TESTED TO 125 PSIG. ORIFICE SHALL BE AT 36" (MAXIMUM) ABOVE FINISHED FLOOR. BOTTOM OF APRON SHALL BE AT 27" ABOVE FINISHED FLOOR IN COMPLIANCE WITH LATEST ADA STANDARDS. ELECTRICAL REQUIREMENTS - 115V-1 PHASE, CORD AND PLUG, 1/5 HP MOTOR	ELKAY (LZS8), HALSEY-TAYLER (HTHB-HAC8WF), ACORN (A111)
FCO-1	FLOOR CLEANOUT - ADJUSTABLE, CAST IRON HOUSING, ANCHOR FLANGE, TAPERED THREAD PLUG, SECURED NICKEL BRONZE TOP. TOP STYLE SHALL MATCH FLOOR FINISH AS FOLLOWS: UNFINISHED FLOOR - ROUND SOLID SCORIATED TOP TILE OR TERRAZZO - SQUARE RECESSED TOP CARPET - ROUND TOP WITH CARPET MARKER.	ZURN (Z1400), JOSAM (55000), MIFAB (C1100), SMITH (4000), WADE (6000), WATTS (CO-200)
FCO-2	FLOOR CLEANOUT - ADJUSTABLE, CAST IRON HOUSING, ANCHOR FLANGE, TAPERED THREAD PLUG, EXTRA HEAVY DUTY H20 RATED SOLID TOP.	ZURN (Z1400), JOSAM (55000), MIFAB (C1100), SMITH (4000), WADE (6000), WATTS (CO-200)
FD-1	FLOOR DRAIN - CAST IRON BODY, NICKEL BRONZE ADJUSTABLE TOP, 5" ROUND, 3" BOTTOM OUTLET, FLASHING COLLAR, SURFACE MEMBRANE CLAMP, DEEP SEAL TRAP.	FLOOR DRAIN - ZURN (Z-415), SMITH (2005), WADE (1100), JOSAM (30000), WATTS (FD-100), MIFAB (F1100), SUN (FD1000)
FD-2	FLOOR DRAIN - EPOXY COATED CAST IRON BODY, HEAVY DUTY CAST IRON SELF CLOSING HINGED GRATE, 12" ROUND ANTI-PONDING SLOTS, 4" BOTTOM OUTLET, CAST IRON SUSPENDED PERFORATED SEDIMENT BUCKET, DRAIN SHALL BE MEANT FOR POURED SLAB PARKING STRUCTURES OR PRECAST PARKING STRUCTURES.	FLOOR DRAIN - ZURN (534), WATTS, SMITH, WADE, JOSAM, MIFAB
FD-3	FLOOR DRAIN - CAST IRON BODY, NICKEL BRONZE ADJUSTABLE TOP, 7" ROUND , 4" BOTTOM OUTLET, FLASHING COLLAR, SURFACE MEMBRANE CLAMP, DEEP SEAL TRAP.	FLOOR DRAIN - ZURN (Z-550), SMITH (2110), WADE (1310), JOSAM (32100), WATTS (FD-300), MIFAB (F1320)
FD-4	FLOOR DRAIN - CAST IRON BODY, NICKEL BRONZE ADJUSTABLE TOP, 6" SQUARE, 3" BOTTOM OUTLET, FLASHING COLLAR, SURFACE MEMBRANE CLAMP, DEEP SEAL TRAP.	FLOOR DRAIN - ZURN (Z-415), SMITH (2005), WADE (1100), JOSAM (30000), WATTS (FD-100), MIFAB (F1100), SUN (FD1000)
GI-1	GREASE INTERCEPTOR - RECESSED, POLYETHYLENE, FIBERGLASS REINFORCED POLYESTER, OR EPOXY COATED STEEL CONSTRUCTION, REMOVABLE OR CLEANABLE INTAKE AND DISCHARGE BAFFLES, INTERNAL FLOW CONTROL FITTING IF NECESSARY FOR OPERATION, GASKETED H-20 RATED COVER, PDI G101 COMPLIANT, PDI APPROVED AND LISTED FOR USE, 30 YEAR WARRANTY. PROVIDE RISERS FOR EXTENDING COVER TO GRADE. PROVIDE TWO-WAY CLEANOUTS UPSTREAM AND DOWNSTREAM OF GREASE INTERCEPTOR. PROVIDE UNIT WITH AK1 HIGH WATER LEVEL ANCHOR KIT AND INSTALL ANCHOR KIT PER MANUFACTURERS INSTRUCTIONS FOR HIGH WATER TABLE APPLICATIONS. 100 GPM FLOW, 1,076 LB. GREASE CAPACITY, 275 GALLONS HOLDING CAPACITY, 4" PIPE INLET AND OUTLET. CONTRACTOR HAS OPTION TO PROVIDE 750 GALLON CONCRETE GREASE INTERCEPTOR PER WISCONSIN SPS 382 REQUIREMENTS. GREASE INTERCEPTOR SIZING CRITERIA FOR STANDARD CONCRETE INTERCEPTOR: 18 MEALS PER DAY (6 FIRE-FIGHTERS PER SHIFT STAFFED 24/7) C = (M x G x H) / (2 x P) = (24 x 3 x 6) / (2 x 3) = 72 GALLONS SIZING CRITERIA FOR SCHIER GREASE INTERCEPTOR: MEALS PER DAY x GREASE PRODUCTION VALUE x DAYS PER PUMP OUT = GREASE CAPACITY NEEDED. 24 MEALS PER DAY x 0.0455 LBS/MEAL x 365 DAYS = 399 LBS GREASE	SCHIER (GREAT BASIN SERIES)
GR-1	GAS PRESSURE REGULATOR - CAST IRON BODY, INTERNAL PRESSURE RELIEF, THREADED CONNECTIONS, ADJUSTABLE PRESSURE SETTING, TIGHT SHUTOFF. 2 PSI INLET PRESSURE, 7" W.C. OUTLET PRESSURE, 400 CFH CAPACITY, MINIMUM CONTROLLABLE FLOW AS PER EQUIPMENT REQUIREMENT	MAXITROL 325 OR APPROVED EQUAL.

PLUMBING FIXTURE SCHEDULE

TAG NAME	DESCRIPTION	MANF. & MODEL
GR-2	GAS PRESSURE REGULATOR - CAST IRON BODY, VENTLESS TYPE, THREADED CONNECTIONS, ADJUSTABLE PRESSURE SETTING, TIGHT SHUTOFF. 2 PSI INLET PRESSURE, 7" W.C. OUTLET PRESSURE, 200 CFH CAPACITY, MINIMUM CONTROLLABLE FLOW AS PER EQUIPMENT REQUIREMENT	MAXITROL 325 OR APPROVED EQUAL.
GR-3	GAS PRESSURE REGULATOR - CAST IRON BODY, VENTLESS TYPE, THREADED CONNECTIONS, ADJUSTABLE PRESSURE SETTING, TIGHT SHUTOFF. 2 PSI INLET PRESSURE, 7" W.C. OUTLET PRESSURE, 515 CFH CAPACITY, MINIMUM CONTROLLABLE FLOW AS PER EQUIPMENT REQUIREMENT	MAXITROL 325 OR APPROVED EQUAL.
GR-4	GAS PRESSURE REGULATOR - CAST IRON BODY, VENTLESS TYPE, THREADED CONNECTIONS, ADJUSTABLE PRESSURE SETTING, TIGHT SHUTOFF. 2 PSI INLET PRESSURE, 7" W.C. OUTLET PRESSURE, 185 CFH CAPACITY, MINIMUM CONTROLLABLE FLOW AS PER EQUIPMENT REQUIREMENT	MAXITROL 325 OR APPROVED EQUAL.
GR-5	GAS PRESSURE REGULATOR - CAST IRON BODY, VENTLESS TYPE, THREADED CONNECTIONS, ADJUSTABLE PRESSURE SETTING, TIGHT SHUTOFF. 2 PSI INLET PRESSURE, 7" W.C. OUTLET PRESSURE, 100 CFH CAPACITY, MINIMUM CONTROLLABLE FLOW AS PER EQUIPMENT REQUIREMENT	MAXITROL 325 OR APPROVED EQUAL.
GR-6	GAS PRESSURE REGULATOR - CAST IRON BODY, VENTLESS TYPE, THREADED CONNECTIONS, ADJUSTABLE PRESSURE SETTING, TIGHT SHUTOFF. 2 PSI INLET PRESSURE, 7" W.C. OUTLET PRESSURE, 35 CFH CAPACITY, MINIMUM CONTROLLABLE FLOW AS PER EQUIPMENT REQUIREMENT	MAXITROL 325 OR APPROVED EQUAL.
HB-1	HOSE BIBB - FREEZELESS WALL HYDRANT, BRASS VALVE BODY AND SEAT, STANDARD FINISH, NON-FERROUS METAL STEM, AUTOMATIC DRAINING, VACUUM BREAKER, 3/4" MALE HOSE THREAD, WALL CLAMP, CONCEALED IN FLUSH MOUNTED LOCKABLE WALL BOX, KEY OPERATED, ASSE 1019 OR 1052 LISTED. VERIFY NUMBER OF KEY OPERATORS TO BE PROVIDED WITH OWNER. BOX COVER AND HYDRANT SHALL USE A COMMON KEY. MOUNT AT 18" ABOVE GRADE UNLESS NOTED OTHERWISE ON DRAWINGS.	PRIER (C-634BX), WOODFORD (B67), ZURN (21300), WATTS (HY-725), MIFAB (MHY-20), SMITH (5509QT), WADE (8700)
HB-2	HOSE BIBB - FOR INDOOR USE, BRASS CONSTRUCTION, STANDARD FINISH, ASSE 1011 APPROVED VACUUM BREAKER, 3/4" MALE HOSE THREAD, METAL WHEEL HANDLE. MOUNT AT 18" ABOVE FINISHED FLOOR.	PRIER (C-155NP.75), WOODFORD (24), CHICAGO FAUCET (293), ACORN (8121), T&S BRASS (B-0736), MIFAB (MHY-90)
HD-1	HUB DRAIN - OPEN SITE HUB DRAIN, PVC TRAP AND STANDPIPE EXTENDED 2" AFF, 3" BOTTOM OUTLET, DEEP SEAL TRAP	NOT APPLICABLE
HD-2	HUB DRAIN - OPEN SITE HUB DRAIN, CAST IRON TRAP AND STANDPIPE EXTENDED 2" AFF, 3" BOTTOM OUTLET, DEEP SEAL TRAP	NOT APPLICABLE
HR-1	HOSE REEL - WALL MOUNTED RETRACTABLE HOSE REEL, STEEL CONSTRUCTION, GUIDE ARM, 3/8" I.D. X 70 FT WATER HOSE INCLUDED, POWDER COAT FINISH, AUTO REWIND, STEEL SUPPORT BASE MOUNT FOR WALL INSTALLATION, 300 PSI RATED, 150°F WORKING TEMPERATURE INCLUDE ANIT-SPILL VACUUM BREAKER WATTS LF008PCQT (ASSE 1056 APPROVED).	REELCRAFT 7000 SERIES OR APPROVED EQUAL
L-1	LAVATORY - ACCESSIBLE, WALL MOUNTED, WHITE VITREOUS CHINA, 20"x18", 4" HIGH CONTOURED BACKSPLASH, SINGLE FAUCET HOLE, DRILLED FOR CONCEALED ARM CARRIER. LAVATORY TRIM - SINGLE HANDLE MIXING FAUCET, SELF CLOSING, BRASS CONSTRUCTION, CHROME-PLATED FINISH, CONVENTIONAL SPOUT WITH AERATOR, WASHERLESS BLADE HANDLE WITH SUPPLIES AT 4" CENTERS, OPERATING FORCE OF 5.0 LBS. (MAXIMUM), PERFORATED GRID STRAINER WITH 1-1/4" 17 GAUGE TAILPIECE, ADJUSTABLE TEMPERATURE LIMIT STOP. MAXIMUM FLOW SHALL BE 0.175 GALLONS PER CYCLE IN COMPLIANCE WITH ENERGY POLICY ACT OF 2005 AND ASME/ANSI STANDARD A112.18.1M. FAUCET SHALL COMPLY WITH FEDERAL ACT S.3874. MINIMUM FLOW TIME SHALL BE 15 SECONDS. INSULATION KIT - PRE-MANUFACTURED FOR P-TRAP, STOP VALVES AND SUPPLY LINES. ACCESSORIES - QUARTER-TURN 3/8" CHROME PLATED HEAVY BRASS ANGLE SUPPLY LOOSE KEY STOPS, CHROME PLATED SOFT COPPER SUPPLY LINES, DRAIN AND OFFSET TAILPIECE, 1-1/4" 20 GAUGE CAST BRASS P-TRAP, SUPPORT CARRIER. MOUNT LAVATORY WITH SUPPORT CARRIER BOLTED SECURELY TO FLOOR. TOP OF RIM SHALL BE AT 34" ABOVE FLOOR IN COMPLIANCE WITH LATEST ADA STANDARD. PROVIDE 29" MINIMUM CLEARANCE FROM FLOOR TO BOTTOM OF APRON IN COMPLIANCE WITH LATEST ANSI A117.1 AND ADA STANDARDS. ARMAFLEX WITH TAPE IS NOT ACCEPTABLE IN LIEU OF INSULATION KIT.	LAVATORY - AMERICAN STANDARD (0356.421), KOHLER (K-2007), SLOAN (SS-3103), TOTO (LT307), ZURN (Z5361) LAVATORY TRIM - CHICAGO FAUCET (2200-E2805ABCP), DELTA (22C631), AMERICAN STANDARD (6114.116.002), , MOEN (8417), ZURN (Z822200-XL)
L-2	LAVATORY - PROVIDED AND INSTALLED BY G.C. STRAINER AND TAILPIECE PROVIDED BY PLUMBING CONTRACTOR AND INSTALLED BY PLUMBING CONTRACTOR. LAVATORY TRIM - SINGLE HANDLE MIXING FAUCET, BRASS CONSTRUCTION, CHROME-PLATED FINISH, CONVENTIONAL SPOUT WITH AERATOR, WASHERLESS PUSH-PULL LEVER HANDLE WITH SUPPLIES AT 4" CENTERS, CERAMIC DISC CARTRIDGE, PERFORATED GRID STRAINER WITH 1-1/4" OFFSET 17 GAUGE TAILPIECE. MAXIMUM FLOW TO BE 0.35 GPM IN COMPLIANCE WITH PROJECT WATER CONSERVATION REQUIREMENTS (LEED). FAUCET SHALL COMPLY WITH FEDERAL ACT S.3874. PROVIDE RESTRICTIVE DEVICE AS REQUIRED. ACCESSORIES - QUARTER-TURN 3/8" CHROME PLATED HEAVY BRASS ANGLE SUPPLY LOOSE KEY STOPS, CHROME PLATED SOFT COPPER SUPPLY LINES, DRAIN AND OFFSET TAILPIECE, 1-1/4" 20 GAUGE CAST BRASS P-TRAP. COORDINATE OPENINGS REQUIRED IN COUNTERTOP WITH GENERAL CONTRACTOR. FIELD CUT OPENINGS WILL NOT BE ACCEPTABLE.	LAVATORY TRIM - CHICAGO FAUCET (2200-E2805ABCP), DELTA (22C631), AMERICAN STANDARD (6114.116.002), , MOEN (8417), ZURN (Z822200-XL)
L-3	LAVATORY - ACCESSIBLE, WALL MOUNTED, WHITE VITREOUS CHINA, 20"x18", 4" HIGH CONTOURED BACKSPLASH, SINGLE FAUCET HOLE, DRILLED FOR CONCEALED ARM CARRIER. LAVATORY TRIM - SINGLE HANDLE MIXING FAUCET, BRASS CONSTRUCTION, CHROME-PLATED FINISH, CONVENTIONAL SPOUT WITH AERATOR, WASHERLESS PUSH-PULL LEVER HANDLE WITH SUPPLIES AT 4" CENTERS, CERAMIC DISC CARTRIDGE, PERFORATED GRID STRAINER WITH 1-1/4" 17 GAUGE TAILPIECE. MAXIMUM FLOW TO BE 0.35 GPM IN COMPLIANCE WITH PROJECT WATER CONSERVATION REQUIREMENTS (LEED). FAUCET SHALL COMPLY WITH FEDERAL ACT S.3874. PROVIDE RESTRICTIVE DEVICE AS REQUIRED. INSULATION KIT - PRE-MANUFACTURED FOR P-TRAP, STOP VALVES, AND SUPPLY LINES. ACCESSORIES - QUARTER-TURN 3/8" CHROME PLATED HEAVY BRASS ANGLE SUPPLY LOOSE KEY STOPS, CHROME PLATED SOFT COPPER SUPPLY LINES, DRAIN AND OFFSET TAILPIECE, 1-1/4" 20 GAUGE CAST BRASS P-TRAP, SUPPORT CARRIER. MOUNT LAVATORY WITH SUPPORT CARRIER BOLTED SECURELY TO FLOOR. TOP OF RIM SHALL BE AT 34" ABOVE FLOOR IN COMPLIANCE WITH LATEST ADA STANDARD. PROVIDE 29" MINIMUM CLEARANCE FROM FLOOR TO BOTTOM OF APRON IN COMPLIANCE WITH LATEST ANSI A117.1 AND ADA STANDARDS. ARMAFLEX WITH TAPE IS NOT ACCEPTABLE IN LIEU OF INSULATION KIT.	LAVATORY - AMERICAN STANDARD (0356.421), KOHLER (K-2007), SLOAN (SS-3103), TOTO (LT307), ZURN (Z5361) LAVATORY TRIM - CHICAGO FAUCET (2200-E2805ABCP), DELTA (22C631), AMERICAN STANDARD (6114.116.002), , MOEN (8417), ZURN (Z822200-XL) INSULATION KIT - TRUEBRO (LAV-GUARD), BROCAR PRODUCTS (TRAP WRAP), MCGUIRE (PROWRAP), PLUMBEREX (PRO-EXTREME)
LT-1	LAUNDRY TROUGH - IN GROUND LAUNDRY TROUGH. OVERALL SIZE SHALL BE 42" L X 12" W X 24" DEEP MINIMUM DIMENSIONS WITH TOP FLUSH WITH SURFACE. LINT SCREEN SHOULD BE POSITIONED 3" FROM END OF UNIT SO STORAGE CAPACITY UPSTREAM OF LINT SCREEN IS 39"X12"X24" MINIMUM. UNIT SHALL BE 4" END DISCHARGE. UNIT SHALL INCLUDE TROUGH LID AND LINT SCREEN. UNIT CONSTRUCTION SHALL BE POLYPROPYLENE WITH PVC LINT FILTER. UNIT SHALL BE RATED FOR MAXIMUM WATER TEMPERATURE OF 200°F AND INCLUDE STAINLESS STEEL SCREWS FOR ATTACHING LID TO BODY. CONTRACTOR SHALL INSTALL P-TRAP AND VENT IN 4" SANITARY PIPING CONNECTING TO THE UNIT. UNIT SHALL INCLUDE TROUGH LID AND LINT SCREEN. UNIT CONSTRUCTION SHALL BE POLYPROPYLENE WITH PVC LINT FILTER. UNIT SHALL BE RATED FOR MAXIMUM WATER TEMPERATURE OF 200°F AND INCLUDE STAINLESS STEEL SCREWS FOR ATTACHING LID TO BODY. CONTRACTOR SHALL INSTALL P-TRAP AND VENT IN 4" SANITARY PIPING CONNECTING TO THE UNIT.	H-M COMPANCY OR APPROVED EQUAL
MB-1	MOP BASIN - MOLDED STONE, WHITE WITH BLACK ACCENTS, 24"x24"x10", STAINLESS STEEL DRAIN WITH COMPANION DOME STRAINER AND LINT BASKET, 3" OUTLET, VINYL BUMPER GUARD ON EXPOSED SIDES. TRIM - EXPOSED TWO HANDLE MIXING FAUCET, BRASS CONSTRUCTION, CHROME-PLATED FINISH, SINGLE WING HANDLES, 1/4 TURN CERAMIC DISC CARTRIDGE, 3/4" HOSE THREAD SPOUT WITH ASSE 1053 RATED INTEGRAL VACUUM BREAKER, WALL BRACE, PAIL HOOK, CHECK STOPS OR INLINE CHECK VALVES TO PREVENT THERMAL CROSSOVER. FAUCET SHALL COMPLY WITH FEDERAL ACT S.3874. ACCESSORIES - MOP HANGER, HOSE AND HOSE BRACKET, DEEP SEAL TRAP	MOP BASIN - FIAT (MSB), WILLIAMS (MTB), SWAN (MS), ZURN (Z-1996), MUSTEE (63M) TRIM - DELTA (28C2383), AMERICAN STANDARD (8344.012), CHICAGO FAUCETS (897-CP), MOEN (8124), SPEAKMAN (SC-5812), SYMMONS (S-2490), ZURN (Z841M1-XL) VACUUM BREAKER - WATTS (8A), OR APPROVED EQUAL

PLUMBING FIXTURE SCHEDULE

TAG NAME	DESCRIPTION	MANF. & MODEL
MV-1	MIXING VALVE - HI/LO MASTER THERMOSTATIC MIXING VALVE ARRANGEMENT FOR TEMPERED WATER CONTROL, ALL BRONZE/BRASS CONSTRUCTION, ROUGH BRASS FINISH, UNION INLETS WITH STRAINERS, COMBINATION CHECK STOPS OR SEPARATE SUPPLY CHECK VALVES AND SHUT OFF VALVES, DIAL THERMOMETER ON OUTLET. RATED FOR 30 GPM OUTPUT MAXIMUM AT 5 PSI DIFFERENTIAL AND 2 GPM OUTPUT MINIMUM BASED UPON CONTINUOUS RECIRCULATION. UNIT TO MIX 125 DEGREE F HOT WATER SUPPLY AND 40 DEGREE F COLD WATER SUPPLY FOR 120 DEGREE F OUTLET. DUE TO SOLAR SYSTEM HOT WATER SUPPLY TEMPERATURE MAX REACH TEMPERATURES OF 160 DEGREE F DURING PERIODS OF MINIMAL USE. WATER HEATER SET POINT IS 120°F. PROVIDE FIELD ADJUSTMENT BY FACTORY AUTHORIZED REPRESENTATIVE. UNIT SHALL SHALL BE ASSE 1017 LISTED AND APPROVED. ASSEMBLY SHALL COMPLY WITH FEDERAL ACT S.3874. RATED FOR 30 GPM OUTPUT MAXIMUM AT 5 PSI DIFFERENTIAL AND 2 GPM OUTPUT MINIMUM BASED UPON CONTINUOUS RECIRCULATION. UNIT TO MIX 125 DEGREE F HOT WATER SUPPLY AND 40 DEGREE F COLD WATER SUPPLY FOR 120 DEGREE F OUTLET. DUE TO SOLAR SYSTEM HOT WATER SUPPLY TEMPERATURE MAX REACH TEMPERATURES OF 160 DEGREE F DURING PERIODS OF MINIMAL USE. PROVIDE FIELD ADJUSTMENT BY FACTORY AUTHORIZED REPRESENTATIVE. UNIT SHALL SHALL BE ASSE 1017 LISTED AND APPROVED. ASSEMBLY SHALL COMPLY WITH FEDERAL ACT S.3874.	LEONARD (TM-LF SERIES), ACORN CONTROLS (SFMV SERIES), APOLLO (34HL), BRADLEY (HL SERIES), LAWLER (800 SERIES), POWERS (LFSH1430/LFMM430 SERIES), SYMMONS (TEMPCONTROL SERIES 7)
MV-2	MIXING VALVE - THERMOSTATIC MIXING VALVE FOR EMERGENCY SHOWER OR COMBINATION SHOWER/EYEWASH FIXTURE, BRONZE BODY CONSTRUCTION, COLD WATER BYPASS, INLET AND OUTLET THERMOMETERS, COMBINATION CHECK STOPS OR SEPARATE SUPPLY CHECK VALVES AND SHUT OFF VALVES, MOUNTING BRACKET. SUPPLY SHUT OFF VALVES SHALL BE LOCKED OPEN TO PREVENT UNAUTHORIZED CLOSURE. DUAL THERMOSTATIC MIXING AND PRESSURE REGULATING VALVE TO DELIVER 25 GPM OF TEMPERED WATER (60-100 DEGREE F) WITH 5 PSI PRESSURE DIFFERENTIAL. UNIT SHALL BE ASSE 1071 LISTED AND APPROVED. VALVE SHALL COMPLY WITH FEDERAL ACT S.3874.	MIXING VALVE - LEONARD (TM-LF), ACORN CONTROLS (ET71 SERIES), ARMSTRONG (Z358), BRADLEY (S19), HAWS (9201H), LAWLER (70 SERIES), POWERS (ETV400), OR PRE-PACKAGED WITH EMERGENCY SHOWER FROM SAME MANUFACTURER.
RD-1	ROOF DRAIN - CAST IRON BODY, SECURED CAST IRON DOME, 15" ROUND, BOTTOM OUTLET, FLASHING CLAMP, GRAVEL STOP, UNDERDECK CLAMP, BEARING PAN, ADJUSTABLE EXTENSION TO MATCH INSULATION THICKNESS, OUTLET SIZE AS LISTED ON DRAWINGS.	ZURN (Z-100), SMITH (1010), WADE (3000), JOSAM (21000), WATTS (RD-300), MIFAB (R1200), SUN (RD4000)
RD-2	ROOF DRAIN - CAST IRON BODY, SECURED CAST IRON DOME, 15" ROUND, BOTTOM OUTLET, FLASHING CLAMP, GRAVEL STOP, UNDERDECK CLAMP, BEARING PAN, EXTENSION TO MATCH INSULATION THICKNESS, 2" TALL INTERNAL STANDPIPE, OUTLET SIZE AS LISTED ON DRAWINGS.	ZURN (Z-100), SMITH (1070), WADE (3000), JOSAM (21500), WATTS (RD-300), MIFAB (R1200)
RDO-1	ROOF DRAIN OUTLET - LAMBS TONGUE DOWNSPOUT NOZZLE, BRONZE BODY, INTEGRAL ANCHORING FLANGE, OUTLET SIZE AS LISTED ON DRAWINGS.	ZURN (Z-199), SMITH (1770), WADE (3940), JOSAM (25019), WATTS (RD-940), MIFAB (R1940), SUN (RD4500)
SH-2	SHOWER BASE - ONE PIECE, PRECAST TERRAZZO, 36"x36" (NOMINAL), 2" DRAIN, STAINLESS STEEL REMOVABLE STRAINER. SHOWER VALVE - SINGLE HANDLE PRESSURE BALANCED MIXING FAUCET, BRASS OR BRONZE CONSTRUCTION, CHROME CAST METAL LEVER HANDLE, WASHERLESS DESIGN, OFF-COLD-HOT TEMPERATURE RANGE INDICATOR DIAL, INTEGRAL CHECK STOPS, ADJUSTABLE TEMPERATURE LIMIT STOP, ASSE 1016 LISTED. ACCESSORIES - CHROME-PLATED PLASTIC SHOWERHEAD WITH SWIVEL BALL JOINT, ADJUSTABLE SPRAY, CHROME-PLATED BRASS ARM AND FLANGE. INSTALL BOTTOM OF SHOWERHEAD AT 72" ABOVE FINISHED FLOOR. MAXIMUM FLOW TO BE 1.5 GPM IN COMPLIANCE WITH PROJECT WATER CONSERVATION REQUIREMENTS (LEED). SET SAFETY LIMIT STOP TO 110 DEGREE F DISCHARGE.	TERRAZZO SHOWER BASE - FIAT (MFT), CREATIVE INDUSTRIES (74832), WILLIAMS (56), FLORESTONE SHOWER VALVE - (8375EP15), SYMMONS (1-100), AMERICAN STANDARD (T675.501), DELTA (R10000-UNWS/T13H122), LEONARD (PAM-II), POWERS (PB413-K1)
SK-1	SINK -

VIEW KEY

NAME — LEVEL NAME
10' - 0" — HEIGHT ABOVE PROJECT 0' - 0"

1 — INDICATES NOTE USED TO DESCRIBE ADDITIONAL INFORMATION ABOUT WORK REQUIRED. SPECIFIC TO THE SHEET AND/OR DETAIL

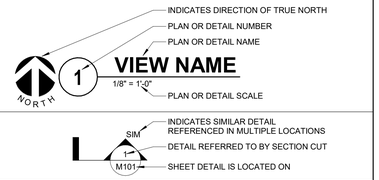

LINE TYPE KEY:

- NEW WORK BY THIS CONTRACTOR (DARK SOLID LINE)
- NEW WORK UNDERFLOOR OR UNDERGROUND BY THIS CONTRACTOR (DARK LONG DASHED LINE)
- NEW WORK BY OTHERS (LIGHT SOLID LINE)
- OPTICAL FIBER WORK BY THE CITY OF MADISON CONTRACTOR UNDER A SEPERATE CONTRACT (LIGHT DASH DOTED LINE)

TECHNOLOGY ABBREVIATION KEY

ABBR:	DESCRIPTION:
AFF	ABOVE FINISHED FLOOR
BFC	BELOW FINISHED CEILING
C	CONDUIT
J-BOX	JUNCTION BOX
SIM	SIMILAR
TYP	TYPICAL
UNO	UNLESS NOTED OTHERWISE
+#	MOUNTING HEIGHT ABOVE FINISHED FLOOR
TR-#	TELECOMMUNICATIONS ROOM
OFOI	OWNER FURNISHED, OWNER INSTALLED

CONTRACTOR ABBREVIATION KEY

ABBR:	DESCRIPTION:
E.C.	ELECTRICAL CONTRACTOR
F.P.C.	FIRE PROTECTION CONTRACTOR
G.C.	GENERAL CONTRACTOR
M.C.	MECHANICAL CONTRACTOR
P.C.	PLUMBING CONTRACTOR
S.C.	SECURITY CONTRACTOR
T.C.	TECHNOLOGY CONTRACTOR
T.C.C.	TEMPERATURE CONTROLS CONTRACTOR

TECHNOLOGY SYMBOL LIST

SYMBOL:	EQUIPMENT TAG:	DESCRIPTION:	NOTE:
C#-WAP	SC-IO-CWAP	WIRELESS ACCESS POINT INFORMATION OUTLET (CEILING)	1.
C#	SC-IO-W	INFORMATION OUTLET (WALL)	1.
HH	SC-HH-G	IN GROUND HAND HOLE	.
CR1	AC-CR1-W	ACCESS CONTROL CREDENTIAL READER - TYPE 1	3.
CSS	N/A	CONTROLLED SECURITY SCHEME SCHEDULE IDENTIFIER	3.
IS1	IC-IS1	VOIP INTERCOM CALL STATION (WALL)	.
EDH	AC-EDH	ACCESS CONTROL ELECTRONIC DOOR	.
GSS	AS-G2-S	ALERTING SYSTEM MESSAGE SIGN (WALL)	2.
S	AS-S-C	ALERTING SYSTEM SPEAKER (CEILING)	2.
S	AS-S-W	ALERTING SYSTEM SPEAKER (WALL)	2.
RR2	AR-RR2-W	G2 ROOM REMOTE 2 (WALL)	.
CAM	VS-CAM-W	CLOSED CIRCUIT TELEVISION (CCTV) SURFACE MOUNT CAMERA	2.
CAM	VS-CAM-C	CLOSED CIRCUIT TELEVISION (CCTV) CEILING CAMERA	2.
CM1	AV-CAM-1	AUDIO/VIDEO CAMERA (POLYCOM) - TYPE 1	2.
MP1	AV-MP1-C	MICROPHONE (SURFACE) TYPE 1 - CEILING MOUNTED, FIXED	2.
SP1	AV-SP1-C	AUDIO/VIDEO SPEAKER (CEILING) - TYPE 1	.
WIDTH X HEIGHT		CABLE TRAY, CHANNEL TRAY, BASKET TRAY	
WIDTH X HEIGHT		LADDER RACK	
DIAMETER		CONDUIT	
		CONDUIT DOWN	
		CONDUIT UP OR UP/DOWN	
		CONDUIT SLEEVE	
		CONTINUATION	

GENERAL NOTES:

1. ALL SYMBOLS AND ABBREVIATIONS LISTED MAY NOT BE APPLICABLE TO THIS PROJECT. REFER TO THE GENERAL TECHNOLOGY EQUIPMENT SCHEDULE FOR MORE COMPLETE DESCRIPTION AND ITEMS.
2. ALL SYMBOLS AND ABBREVIATIONS REFER TO TECHNOLOGY SHEETS ONLY AS DEFINED ON THE SHEET INDEX. REFER TO THE GENERAL TECHNOLOGY NOTES FOR ADDITIONAL INFORMATION.
3. ALL SYMBOLS LISTED ABOVE ARE FOR REFERENCE ONLY. REFER TO PLANS AND LINE TYPE KEY FOR NEW, EXISTING TO REMAIN AND TO BE REMOVED ITEMS FOR ADDITIONAL INFORMATION.

TECHNOLOGY SYMBOL NOTES:

1. "C#" INDICATES INFORMATION OUTLET FACEPLATE CONFIGURATION. REFER TO INFORMATION OUTLET SCHEDULE ON T500 FOR ADDITIONAL INFORMATION.
2. THE DEVICES ARE ROUGH-IN ONLY, AND WILL BE FURNISHED AND INSTALLED BY THE CITY OF MADISON. CONTRACTOR TO PROVIDE BOXES, CONDUITS AND CABLING.
3. REFER TO CONTROLLED SECURITY SCHEME (CSS) TYPE SCHEDULE ON T501 FOR ADDITIONAL INFORMATION.

SUGGESTED MATRIX OF RESPONSIBILITY

ITEM:	SHOWN ON:	FURNISHED BY:	INSTALLED BY:	NOTES:
TECHNOLOGY ROUGH-IN, REFER TO GENERAL TECHNOLOGY EQUIPMENT SCHEDULE AND SPECIFICATIONS FOR DEFINITION	T-SERIES	E.C.	E.C.	3. 4.
INFORMATION OUTLET FACEPLATES, JACKS, AND TERMINATIONS	T-SERIES	T.C.	T.C.	
CONDUIT SLEEVES (WHEN SHOWN ON DRAWINGS)	T-SERIES	E.C.	E.C.	
CONDUIT SLEEVES (NOT SHOWN BUT REQUIRED FOR PROPER INSTALLATION OF SYSTEM)	N/A	T.C.	T.C.	2. 4.
TELECOMMUNICATION SYSTEMS ROUGH-IN	T-SERIES	T.C.	E.C.	1.
TELECOMMUNICATION EQUIPMENT, CABLING, AND TERMINATIONS	T-SERIES	T.C.	T.C.	
CABLE TRAY (INCLUDING WIRE BASKET TRAY) REFER TO SPECIFICATION SECTION 27 05 28 FOR DEFINITION	T-SERIES	E.C.	E.C.	
LADDER RACK	T-SERIES	T.C.	T.C.	5.
GROUNDING LUGS ON TECHNOLOGY EQUIPMENT	T-SERIES	T.C.	E.C.	6.
BONDING SYSTEM FOR TECHNOLOGY SYSTEM, REFER TO SPECIFICATION SECTION 27 05 26 FOR DEFINITION	T-SERIES	E.C.	E.C.	7. 8.
CONNECTION OF TECHNOLOGY BONDING SYSTEM TO THE ELECTRICAL GROUND SYSTEM	T-SERIES	E.C.	E.C.	
LINE VOLTAGE POWER (+120V OR GREATER)	E-SERIES	E.C.	E.C.	
LINE VOLTAGE POWER (NOT SHOWN BUT REQUIRED FOR PROPER INSTALLATION OF SYSTEM)	N/A	T.C.	E.C.	2. 4.
LINE VOLTAGE POWER FOR DOOR HARDWARE POWER SUPPLIES	ARCH SPEC	E.C.	E.C.	
LOW VOLTAGE CABLING FOR TECHNOLOGY SYSTEMS	T-SERIES	T.C.	T.C.	
CABLE HANGERS AND SUPPORTS OR OTHER CABLE ROUTING METHODS (OTHER THAN CONDUIT AND CABLE TRAY)	T-SERIES	T.C.	T.C.	5.
TECHNOLOGY SERVICE ENTRANCE CONDUITS, HANDHOLES, AND MANHOLES	T-SERIES	E.C.	E.C.	

SUGGESTED MATRIX OF RESPONSIBILITY NOTES

1. LOCATIONS OF TELECOMMUNICATIONS ROUGH-INS SHALL BE INDICATED BY THE INFORMATION OUTLET SYMBOLS ON THE DRAWINGS. REFER TO THE TECHNOLOGY SYMBOL LIST FOR ADDITIONAL INFORMATION.
2. BASED ON THE INHERENT DIFFERENCES IN PRODUCTS FROM VARIOUS MANUFACTURERS, ALL REQUIRED EQUIPMENT MAY NOT BE SHOWN ON THE DRAWINGS FOR ALL ACCEPTABLE MANUFACTURERS.
3. INCLUDES BACKBOXES AND CONDUIT REQUIRED FOR THE TECHNOLOGY SYSTEMS INSTALLATION. THE E.C. SHALL BASE THE BID ON THE BASIS OF DESIGN SHOWN ON THE CONTRACT DOCUMENTS.
4. ALL CHANGES TO THE SLEEVES, BACKBOXES, CONDUITS, AND POWER REQUIRED BECAUSE OF THE T.C.'S SELECTION OF AN ALTERNATE ACCEPTABLE MANUFACTURER OR FROM SYSTEM CONFIGURATIONS THAT ARE LEFT TO THE CHOICE OF THE CONTRACTOR SHALL BE INCLUDED IN THE T.C.'S BID. THIS BID SHALL INCLUDE INSTALLATION BY A LICENSED ELECTRICIAN.
5. UNLESS TRADE RULES DICTATE OTHERWISE.
6. FURNISHED AS PART OF THE EQUIPMENT WHEN POSSIBLE, OR FURNISHED TO THE E.C. FOR INSTALLATION IN THE FIELD.
7. INCLUDES ALL CONDUCTORS, GROUND BARS, AND TERMINATIONS FOR THE COMPLETE BONDING SYSTEM REQUIRED BY THE SPECIFICATIONS.
8. REFER TO ELECTRICAL DRAWINGS FOR LOCATIONS OF PANELS AND SWITCHBOARDS SHOWN IN THE TECHNOLOGY BONDING RISER DIAGRAM AND TYPICAL TELECOM ROOM BONDING FLOW DIAGRAM.

TELECOM ROOM REFERENCES

TELECOM ROOM	DETAIL / SHEET REFERENCE	FLOOR PLAN REFERENCE	ARCH ROOM NUMBER
TR-1	1/T300	1/T101	119

TECHNOLOGY GENERAL NOTES:

1. ###-#### INDICATES GENERAL TECHNOLOGY EQUIPMENT SCHEDULE ITEM LABELED AS "EQUIPMENT TAG"
2. REFER TO GENERAL TECHNOLOGY EQUIPMENT SCHEDULE AND SPECIFICATIONS FOR FULL DESCRIPTIONS AND MANUFACTURERS OF ALL DEVICES.

TECHNOLOGY MOUNTING SUBSCRIPT KEY:

- A MOUNT AT +6" TO CENTERLINE ABOVE COUNTER OR BACKSPLASH
- H MOUNT ORIENTED HORIZONTALLY
- L MOUNT IN CASEWORK
- M MOUNT IN MODULAR FURNITURE
- S MOUNT IN SURFACE RACEWAY

A SLASH IS USED BETWEEN TWO SUBSCRIPTS, e.g., A/H.

TECHNOLOGY INSTALLATION NOTES:

1. THE COMPLETE INSTALLATION SHALL BE IN ACCORDANCE WITH THE ADA STANDARDS FOR ACCESSIBLE DESIGN. REFER TO THE ADA GUIDELINES FOR ALL CONFIGURATIONS DETAIL ON THIS PAGE FOR ADDITIONAL INFORMATION.
2. CONCEAL ALL CONDUIT IN WALLS, PARTITIONS, ABOVE CEILING, IN FLOOR SLAB, ETC. UNLESS OTHERWISE INDICATED ON THE PLANS OR IN THE SPECIFICATIONS. CONDUIT IN MECHANICAL ROOMS AND STORAGE ROOMS WITHOUT CEILINGS MAY BE EXPOSED ON BUILDING STRUCTURE.
3. BOXES LOCATED ON OPPOSITE SIDES OF NON-RATED WALLS SHALL BE OFFSET A MINIMUM OF 6" HORIZONTALLY. BOXES ON OPPOSITE SIDES OF FIRE RATED WALLS SHALL BE OFFSET A MINIMUM OF 24" HORIZONTALLY. "THRU-THE-WALL" BOXES SHALL NOT BE ALLOWED WITHOUT PRIOR WRITTEN APPROVAL OF THE ARCHITECT/ENGINEER.
4. VERIFY ALL FURNITURE, MODULAR FURNITURE, AND EQUIPMENT LOCATIONS WITH ARCHITECTURAL PLANS, ELEVATIONS, AND REVIEWED SHOP DRAWINGS. PRIOR TO MAKING THE ACTUAL TELECOMMUNICATIONS INSTALLATION, ADJUST OUTLETS OR CONNECTION LOCATIONS TO ACCOMMODATE FURNITURE AND/OR EQUIPMENT.
5. TELECOMMUNICATIONS EQUIPMENT SHALL BE MOUNTED TO ALLOW ACCESS TO ELECTRICAL AND MECHANICAL EQUIPMENT. ALL MOUNTING OF TELECOMMUNICATION DEVICES ON EQUIPMENT SUPPLIED BY ANOTHER CONTRACTOR SHALL BE APPROVED IN ADVANCE BY THE OTHER CONTRACTOR.
6. CONTRACTOR SHALL BE RESPONSIBLE FOR ALL OPENINGS REQUIRED IN WALLS. ALL OPENINGS SHALL BE REPAIRED TO MATCH EXISTING BY A QUALIFIED CONTRACTOR AT THE EXPENSE OF THIS CONTRACTOR. ALL CONDUITS THROUGH WALLS SHALL BE GROUTED OR SEALED INTO OPENINGS.
7. ALL MATERIALS USED TO SEAL PENETRATIONS OF FIRE RATED WALLS AND FLOORS SHALL BE TESTED AND CERTIFIED AS A SYSTEM PER ASTM E814 STANDARDS FOR FIRE TESTS OF THROUGH-PENETRATION FIRESTOPS. REFER TO DIVISION 7 FOR ADDITIONAL INFORMATION AND REQUIREMENTS SPECIFIC TO FIRESTOPPING.
8. REMOVE AND REINSTALL ALL CEILING TILES AS REQUIRED FOR THE EXECUTION OF TELECOMMUNICATIONS WORK THAT IS OUTSIDE THE CONTRACT LIMITS OF CONSTRUCTION. REPLACE CEILING TILES WITH IDENTICAL MATERIAL WHERE DAMAGED BY THIS CONTRACTOR.
9. ALL LADDER RACK AND CABLE TRAY SIZES ARE AS DEFINED IN THE GENERAL TECHNOLOGY EQUIPMENT SCHEDULE. REFER TO SPECIFICATION SECTION 27 00 05 FOR APPROVED MANUFACTURERS AND INSTALLATION REQUIREMENTS.
10. FLUSH MOUNT ALL TELECOMMUNICATION OUTLETS AT +18" FROM FLOOR (CENTERLINE DIMENSION), EXCEPT WHERE OTHERWISE NOTED. OUTLETS MAY BE SURFACE MOUNTED WHEN CONDUIT IS SPECIFIED EXPOSED.

TECHNOLOGY OUTSIDE PLANT NOTES

1. THE LOCATION OF THE CONDUIT, HAND HOLES AND MAINTENANCE HOLES SHOWN ARE APPROXIMATE LOCATIONS. FIELD VERIFY THE LOCATION OF ALL UTILITIES PRIVATE AND/OR PUBLIC PRIOR TO THE INSTALLATION OF THE COMPONENT. FIELD COORDINATE THE FINAL LOCATION WITH THE OWNER AND ENGINEER PRIOR TO INSTALLATION.
2. POTHOLING TO LOCATE EXISTING UNDERGROUND UTILITIES, IF APPLICABLE, SHALL BE INCLUDED WITHIN THE CONTRACTORS BID. CONTRACTOR IS RESPONSIBLE FOR FINAL PLACEMENT OF HANDHOLES MAINTENANCE HOLES AND SHALL NOTIFY THE ENGINEER OF FINAL LOCATIONS PRIOR TO INSTALLATION.
3. HAND HOLES SHALL BE CONSTRUCTED SO THAT THE TOP OF THE FRAME WILL BE FLUSH WITH THE GROUND LINE.
4. REMOVAL AND REPLACEMENT OF THE EXISTING UNDERGROUND UTILITIES THAT ARE REQUIRED TO COMPLETE THE INSTALLATION SHALL BE INCLUDED WITHIN THE CONTRACTORS BID.
5. CONTRACTOR SHALL INCLUDE WITHIN THEIR BID ANY REMOVAL AND REPLACEMENT OF EXISTING SIDEWALK, PAVEMENT, GRASS, SHRUBS, TREES, ETC. THAT WILL BE IMPACTED BY THE INSTALLATION OF THE NEW CONDUITS SHOWN ON THE DRAWINGS. IF TREES ARE REQUIRED TO BE REMOVED THE CONTRACTOR SHALL CONTACT THE OWNER AND DISCUSS OPTIONS PRIOR TO CUTTING DOWN ANY TREE OR SHRUB OVER 5' IN HEIGHT.
6. NO ADDITIONAL COST SHALL BE APPROVED FOR PLACING CONDUITS DEEPER THAN REQUIRED MINIMUM DEPTH TO AVOID EXISTING UNDERGROUND UTILITIES.

TECHNOLOGY SHEET INDEX

T000	TECHNOLOGY COVER SHEET
T001	GENERAL TECHNOLOGY EQUIPMENT SCHEDULE
T100	SITE PLAN - TECHNOLOGY
T101	FLOOR PLAN LEVEL 1 - TECHNOLOGY
T102	MEZZANINE PLAN - TECHNOLOGY
T300	ENLARGED PLANS - TECHNOLOGY
T400	RISER DIAGRAMS - TECHNOLOGY
T401	RISER DIAGRAMS - TECHNOLOGY
T500	DETAILS AND SCHEDULES - TECHNOLOGY
T501	DETAILS AND SCHEDULES - TECHNOLOGY

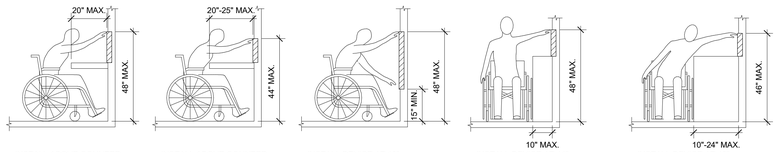

INSTALL ABOVE COUNTER DEVICE AT 44" ABOVE FINISHED FLOOR.

INSTALL ABOVE COUNTER DEVICE AT 40" ABOVE FINISHED FLOOR.

INSTALL DEVICE AT 18" ABOVE FINISHED FLOOR.

INSTALL DEVICE AT 44" ABOVE FINISHED FLOOR.

INSTALL DEVICE AT 42" ABOVE FINISHED FLOOR.

ADA GUIDELINES - FRONT ACCESS

ADA GUIDELINES - SIDE ACCESS

ADA STANDARDS FOR ACCESSIBLE DESIGN

IMEG
1800 DEMING WAY, SUITE 200
MIDDLETON, WI 53562
608.223.9600 FAX: 608.836.0415
www.imegcorp.com
PROJECT # 170011A0.00

IMEG CORP. RESERVES PROPRIETARY RIGHTS, INCLUDING COPYRIGHTS, TO THIS DRAWING AND THE DATA SHOWN THEREON. SAID DRAWING AND/OR DATA ARE THE EXCLUSIVE PROPERTY OF IMEG CORP. AND SHALL NOT BE USED OR REPRODUCED FOR ANY OTHER PROJECT WITHOUT THE EXPRESS WRITTEN APPROVAL AND PARTICIPATION OF IMEG CORP. © 2017 IMEG CORP.

REFERENCE SCALE IN INCHES
0 1 2 3

OPN ARCHITECTS
301 N BROOM STREET #100
MADISON, WI 53703
608-819-0260 PHONE
www.opnarchitects.com
opn@opnarchitects.com

All reports, plans, specifications, computer files, field data, notes and other documents and instruments prepared by OPN Architects, Inc. as instruments of service shall remain the property of OPN Architects, Inc. OPN Architects, Inc. shall retain all common law, statutory and other reserved rights, including the copyright thereto.

© 2017 OPN Architects, Inc.

Owner
City of Madison Fire Department
314 W. Dayton St.
Madison, WI 53703

Project
Madison Fire Station 14
3201 Dairy Drive
Madison, WI 53718

Civil Engineer
Snyder & Associates, Inc
5010 Voges Rd
Madison WI, 53718
P. 608-838-0444

Structural Engineer
IMEG
1800 Deming Way #200
Middleton, WI 53562
P. 608-223-9600

Mechanical Engineer
IMEG
1800 Deming Way #200
Middleton, WI 53562
P. 608-223-9600

Electrical Engineer
IMEG
1800 Deming Way #200
Middleton, WI 53562
P. 608-223-9600

Key Plan

Sheet Issue Date
BID DOCUMENTS 11/03/17

Revision Date

Drawing
TECHNOLOGY COVER SHEET

City of Madison Contract No. **8027**
OPN Project No. **17207000**

T000

GENERAL TECHNOLOGY EQUIPMENT SCHEDULE

THE EQUIPMENT TAGS AND THE GENERAL TECHNOLOGY EQUIPMENT SCHEDULE ARE FOR THE CONVENIENCE OF THE CONTRACTOR. EACH CONTRACTOR SHALL BE RESPONSIBLE FOR VERIFICATION OF QUANTITIES AND SHALL FURNISH ALL MATERIAL REQUIRED, WHETHER SPECIFIED OR NOT, TO PRODUCE A SATISFACTORY WORKING SYSTEM.

CATALOG NUMBERS SHALL NOT BE CONSIDERED COMPLETE, BUT ARE GIVEN ONLY TO AID THE CONTRACTOR IN THE SEARCH FOR MATERIAL. NO MATERIAL SHALL BE ORDERED BY MANUFACTURER OR CATALOG NUMBER ONLY. EACH CONTRACTOR SHALL FIRST READ THE COMPLETE DESCRIPTION OF THE MATERIAL AND EQUIPMENT ON THESE DRAWINGS AND SPECIFICATIONS. THE FIRST MANUFACTURER LISTED IS THE BASIS OF DESIGN. "STANDARD COLOR" INDICATES FACTORY FINISH AVAILABLE AT NO ADDITIONAL CHARGE.

ITEM NO.	EQUIPMENT TAG	DESCRIPTION	APPROVED MANUFACTURERS
1	SC-IO-W	INFORMATION OUTLET, WALL MOUNT. 2 OR 4-PORT FACEPLATE AS INDICATED IN INFORMATION OUTLET SCHEDULE ON DRAWING T500. "#" INDICATES INFORMATION OUTLET FACEPLATE CONFIGURATION AS INDICATED ON THE FLOOR PLANS. REFER TO INFORMATION OUTLET SCHEDULE ON DRAWING T500 FOR DESCRIPTION OF EACH PORT CONFIGURATION AND FOR PIN CONFIGURATION OF JACKS. "W" INDICATES INFORMATION OUTLET FOR WALL PHONE. PROVIDE (1) RJ-45 JACK IN STAINLESS STEEL FACEPLATE WITH WALL PHONE MATING LUGS AT +48" AFF FOR WALL HUNG TELEPHONE. TELEPHONE BY OWNER. INSTALL INFORMATION OUTLET IN A 4" SQUARE 2-1/8" DEEP BACK BOX WITH A SINGLE GANG PLASTER RING AND A 1" EMT CONDUIT STUBBED TO CABLE TRAY ABOVE NEAREST ACCESSIBLE CEILING. REFER TO 1/T500 FOR TECHNOLOGY ROUGH-IN MOUNTING DETAIL. REFER TO SUGGESTED MATRIX OF SCOPE RESPONSIBILITY ON DRAWING T000 FOR ADDITIONAL INFORMATION. ALL WALL MOUNT OUTLETS WILL BE AT 18" AFF UNLESS NOTED OTHERWISE. PROVIDE REMOVABLE BLANK INSERTS FOR UNUSED FACEPLATE PORTS.	FACEPLATE: HUBBELL IFP14EI CAT6 JACK: HUBBELL HXJ6EI BLANK: HUBBELL SFB10 NO SUBSTITUTION
2	SC-IO-CWAP	WIRELESS ACCESS POINT EQUIPMENT OUTLET, CEILING MOUNT. 2 PORT FACEPLATE AS INDICATED IN INFORMATION OUTLET SCHEDULE ON DRAWING T500. "#" INDICATES INFORMATION OUTLET FACEPLATE CONFIGURATION AS INDICATED ON THE FLOOR PLANS. REFER TO INFORMATION OUTLET SCHEDULE ON DRAWING T500 FOR DESCRIPTION OF EACH CONFIGURATION AND FOR PIN CONFIGURATION OF JACKS. INSTALL INFORMATION OUTLET IN A 4" SQUARE 2-1/8" DEEP BACK BOX WITH A SINGLE GANG PLASTER RING AND A 1" EMT CONDUIT STUBBED TO CABLE TRAY ABOVE NEAREST ACCESSIBLE CEILING (MINIMUM 6" BEYOND BACK BOX). REFER TO SUGGESTED MATRIX OF SCOPE RESPONSIBILITY ON DRAWING T000 FOR ADDITIONAL INFORMATION. PROVIDE (2) TWO CATEGORY 6 CABLES AND JACKS PER WAP.	FACEPLATE: HUBBELL IFP14EI CAT6 JACK: HUBBELL HXJ6EI BLANK: HUBBELL SFB10 NO SUBSTITUTION
3	SC-TTB-1	TELECOMMUNICATIONS TERMINAL BOARD. 4'-X 8'-X 3/4" A-C GRADE FIRE-RATED PLYWOOD. EXPOSED SIDE SHALL BE SMOOTH. MOUNT ORIENTED VERTICALLY WITH TOP OF PLYWOOD AT 8'-6" A.F.F. RATING STAMP MUST REMAIN VISIBLE.	
4	SC-LR-1	LADDER RACK. 18" WIDE TUBULAR STEEL CONSTRUCTION, RUST RESISTANT BLACK ENAMEL FINISH, UL LISTED. PROVIDE COMPLETE WITH ALL NECESSARY ADAPTERS, SUPPORT HARDWARE, AND FITTINGS, TO INCLUDE RADIUS DROPS. REMOVE SHARP BURRS FROM LADDER RACK AND REPAINT ALL AREAS THAT HAVE BEEN FIELD MODIFIED, CUT OR EXPOSED.	CHATSWORTH PRODUCTS 11275-718 B-LINE HOFFMAN
5	SC-CT-1	CABLE TRAY, MESH TYPE, 4" LOADING DEPTH, 12" WIDTH, COMPLETE WITH ALL FITTINGS AND MOUNTING HARDWARE. PROVIDE TRAPEZE SUPPORT WITH PLASTIC RETAINER. CUTTING OF THE MESH CABLE TRAY SHALL BE DONE WITH OFFSET BOLT CUTTERS ONLY. 10' MAXIMUM SUPPORT SPAN. EITHER SPLICE WASHERS OR TERMINAL GROUND SUPPORT AND JUMPER WIRE SHALL BE USED TO ATTAIN GROUNDING CONTINUITY TROUGHOUT.	B-LINE FT4X12
6	SC-GND-1	WALL-MOUNT GROUND BAR. MINIMUM 4" H X 12" L X 1/4" D COPPER, ELECTRICALLY ISOLATED BY INSULATORS INTEGRAL TO MOUNTING BRACKETS. PROVIDE UNIT CONFIGURED WITH SIXTEEN (16) SETS OF 5/16" HOLES SPACED 5/8" ON CENTER TO ACCOMMODATE "A" SPACED TWO-HOLE COMPRESSION LUGS AND THREE (3) SETS OF 7/16" HOLES SPACED 1" ON CENTER TO ACCOMMODATE "C" SPACED TWO-HOLE COMPRESSION LUGS. ANSI/EIA/TIA-607 AND BICSI COMPLIANT. UL LISTED. REFER TO 2/T500 FOR ADDITIONAL INFORMATION.	CHATSWORTH PRODUCTS 13622 SERIES ERICO HARGER
7	SC-GND-2	RACK MOUNT GROUND BAR, MINIMUM 3/16" D X 3/4" H X 19" W COPPER, CONFIGURED WITH MINIMUM EIGHT (8) #6-32 TAPPED HOLES AND MINIMUM FOUR (4) 5/16" UNTAPPED HOLES. UL LISTED AND ANSI/EIA/TIA-607 AND BICSI COMPLIANT. REQUIRES ONE (1) 1.75" RACK MOUNTING SPACE.	CHATSWORTH PRODUCTS ERICO HARGER NO SUBSTITUTION
8	SC-ER-1	EQUIPMENT RACK. 84"H X 20.25"W X 15"D TWO-POST CONFIGURATION. PROVIDE COMPLETE WITH TWO (2) TWO-SIDED VERTICAL WIRE MANAGERS PER RACK, EACH WITH MINIMUM 6" X 6" CAPACITY FRONT AND REAR, AND WITH LADDER RACK CONNECTION HARDWARE ACCESSORIES AND RADIUS DROP LADDER RACK.	HUBBELL HP284RR-20
9	SC-HWM-1	HORIZONTAL CABLE MANAGEMENT, FINGER DUCT STYLE, 3" X 3" CAPACITY FRONT, 2" X 5" CAPACITY REAR. REMOVABLE FRONT AND REAR COVERS. PASS THROUGH HOLES TO FACILITATE FRONT TO REAR CABLING. REQUIRES (2) 1.75" MOUNTING SPACES.	HUBBELL HC219CC3P NO EQUALS
10	SC-HH-G	IN GROUND HANDHOLE FOR OPTICAL FIBER CABLE PROVIDED BY A DIFFERENT PROJECT.	QUAZITE DT-1730-24HD
11	SC-MPP-1	MODULAR PATCH PANEL. FORTY EIGHT (48) MODULAR RJ-45 SNAP-IN JACKS. WELDED STEEL CONSTRUCTION, BLACK POWDER COAT FINISH, MOUNTS DIRECTLY TO EIA/TIA STANDARD 19" RELAY RACK. REQUIRES (2) 1.75" MOUNTING SPACES. PROVIDE COMPLETE FULLY POPULATED WITH JACKS.	HUBBELL CAT 6: P6E48U NO EQUALS
12	SC-FDC-1	FIBER OPTIC DISTRIBUTION CABINET TO BE INSTALLED BY THE CITY OF MADISON CONTRACTOR AS PART OF SEPARATE CONTRACT.	NOT IN SCOPE OF THIS PROJECT
13	SC-CAB-1	CONTRACTOR PROVIDED CONTRACTOR INSTALLED EQUIPMENT CABINET, WALL MOUNTED.	
14	SC-PWR-1	POWER STRIP WITH SURGE PROTECTION, RACK MOUNTED. REQUIRES (1) 1.75" MOUNTING SPACE.	CHATSWORTH 12817-708 WITH SURGE PROTECTION
15	SC-CPW-1	FIRE RATED PATHWAY, 4" X 4-5/8" X 14" L, BUILT IN FIRE AND SMOKE SEALING SYSTEM THAT AUTOMATICALLY ADJUSTS TO THE AMOUNT OF CABLES INSTALLED, ORANGE PAINT. REFER TO 4/T500 FOR ADDITIONAL INFORMATION.	.
16	AC-CR1-W	CARD READER, CARD SWIPE TYPE, WALL MOUNTED. PROVIDED AS INTEGRAL PART OF SECURITY MANAGEMENT SYSTEM. CARD READERS SHOWN ON PLANS TO IDENTIFY INTENDED MOUNTING LOCATION. REFER TO SPECIFICATION SECTION 28 13 00 FOR COMPLETE INFORMATION. REFER TO 2/T400 FOR CABLING INFORMATION. MOUNT AT 36" AFF TO CENTER OF DEVICE.	KEYSCAN REFER TO SPECIFICATION FOR ADDITIONAL INFORMATION
17	AC-SEC-1	ACCESS CONTROL SECURITY CONTROL PANEL. REFER TO SPECIFICATION 28 13 00 FOR COMPLETE INFORMATION AND MODEL NUMBER.	KEYSCAN
18	IC-IS1	DOOR VOIP DEVICE. PROVIDE (1) 4" SQUARE BOX AT ELEVATION DETERMINED BY ARCHITECT/OWNER AT DOORS INDICATED ON FLOOR PLANS. PROVIDE AND MOUNT IN THE VE-5X5 BOX. FOLLOW MANUFACTURER'S RECOMMENDATIONS. PROVIDE MINIMUM 3/4" CONDUIT WITHIN AN EXTERIOR CALL TO ABOVE AN ACCESSIBLE CEILING AND BACK TO THE IT ROOM 119. PROGRAMMING TO BE DONE BY CITY OF MADISON IT DEPARTMENT. EACH DEVICE REQUIRES CONTRACTOR TO CABLE WITH (1) CATEGORY 6 CABLE.	VIKING E-30-IP-EWP, INCLUDE THE VE-55 COVER OVER EACH DEVICE.

GENERAL TECHNOLOGY EQUIPMENT SCHEDULE (CONTINUED)

19	VS-CAM-C	CLOSED CIRCUIT TELEVISION (CCTV) CAMERA. RECESSED CEILING MOUNTED. REFER TO SPECIFICATION FOR ADDITIONAL INFORMATION. EACH CAMERA IS TO HAVE (1) CATEGORY 6 CABLE TO PROVIDE PoE DATA COMMUNICATIONS SERVICE TO IT FROM THE TECHNOLOGY ROOM I.T.119. THE CITY OF MADISON IT DEPARTMENT WILL DETERMINE ALL CAMERA REQUIREMENTS. CONTRACTOR WILL PROVIDE BACKBOX FOR DATA DEVICE AND CABLING FOR EACH.	DEVICE IS TO BE FURNISHED AND INSTALLED BY CITY OF MADISON.
20	VS-CAM-W	CLOSED CIRCUIT TELEVISION (CCTV) CAMERA. SURFACE MOUNTED. REFER TO SPECIFICATION FOR ADDITIONAL INFORMATION. EACH CAMERA IS TO HAVE (1) CATEGORY 6 CABLE TO PROVIDE PoE DATA COMMUNICATIONS SERVICES TO IT FROM THE TECHNOLOGY ROOM I.T.119. THE CITY OF MADISON IT DEPARTMENT WILL DETERMINE ALL CAMERA REQUIREMENTS. CONTRACTOR WILL PROVIDE BACKBOX FOR DATA DEVICE AND CABLING FOR EACH.	DEVICE IS TO BE FURNISHED AND INSTALLED BY CITY OF MADISON.
21	AS-G2-S	G2 MESSAGE SIGN. USDD ALERTING SYSTEM SCROLLING MESSAGE SIGN.	REFER TO SPECIFICATION 27 20 00 AND 26 05 33 FOR CONDUIT SIZES DEVICE IS TO BE FURNISHED AND INSTALLED BY CITY OF MADISON.
22	AS-S-C	USDD ALERTING SYSTEM G2 ILLUMINATING SPEAKER, CEILING MOUNTED.	REFER TO SPECIFICATION 27 20 00 AND 26 05 33 FOR CONDUIT SIZES DEVICE IS TO BE FURNISHED AND INSTALLED BY CITY OF MADISON.
23	AS-S-W	USDD ALERTING SYSTEM G2 ILLUMINATING SPEAKER, WALL MOUNTED.	REFER TO SPECIFICATION 27 20 00 AND 26 05 33 FOR CONDUIT SIZES DEVICE IS TO BE FURNISHED AND INSTALLED BY CITY OF MADISON.
24	AS-RR-W	USDD ALERTING SYSTEM ROOM REMOTE WALL MOUNTED.	REFER TO SPECIFICATION 27 20 00 AND 26 05 33 FOR CONDUIT SIZES DEVICE IS TO BE FURNISHED AND INSTALLED BY CITY OF MADISON.
25	AV-AMP-1	AUDIO AMPLIFIER, BY OWNER.	DEVICE IS TO BE FURNISHED AND INSTALLED BY CITY OF MADISON. REFER TO DETAIL 3/T400 FOR CABLING REQUIREMENTS
26	AV-CD-1	AUDIO VIDEO POLYCOM CODEC.	DEVICE IS TO BE FURNISHED AND INSTALLED BY CITY OF MADISON. CONTRACTOR TO EXPECT THIS DEVICE(S) TO BE MOUNTED IN THE CABINET SHOWN ON DETAIL 3/T400
27	AV-CAM-1	AUDIO VIDEO CAMERA (POLYCOM).	DEVICE IS TO BE FURNISHED AND INSTALLED BY CITY OF MADISON. REFER TO DETAIL 3/T400
28	AV-SP1-C	OVERHEAD PAGING SYSTEM SPEAKER, CEILING MOUNTED, PRE-ASSEMBELED BAFFLE WITH PERFORATED STEEL GRILLE AND SPEAKER ASSEMBLY. EQUIPPED WITH 8" LOUDSPEAKER WITH 10-OUNCE MAGNET, UNIVERSAL MATCHING TRANSFORMER FOR 70 VOLTS SYSTEMS WITH A MINIMUM OF FIVE SECONDARY TRANSFORMER TAPS, 90-17000 HZ FREQUENCY RANGE. PROVIDE COMPLETE WITH MATCHING BACKBOX AND TILE BRIDGE. FLUSH MOUNT IN FINISHED CEILINGS.	BOGEN S810T725PGWVR OR CITY OF MADISON IT DEPARTMENT APPROVED EQUAL
29	AV-MON-1	VIDEO DISPLAY. 90" DIAGONAL.	DEVICE IS TO BE FURNISHED AND INSTALLED BY CITY OF MADISON.
30	AV-MON-2	VIDEO DISPLAY. 60" DIAGONAL.	DEVICE IS TO BE FURNISHED AND INSTALLED BY CITY OF MADISON.
31	AV-MP1-C	MICROPHONE (SURFACE) TYPE 1 - CEILING MOUNTED, FIXED.	DEVICE IS TO BE FURNISHED AND INSTALLED BY CITY OF MADISON.
32	AV-MP2-S	MICROPHONE (SURFACE) TYPE 2 - TABLE MOUNTED, PORTABLE.	DEVICE IS TO BE FURNISHED AND INSTALLED BY CITY OF MADISON. THIS DEVICE WILL BE HOUSED IN THE A/V CABINET THAT WILL BE INSTALLED IN ROOM 139 AND IS NOTED AS SUCH ON DETAIL 3/T400

OPN ARCHITECTS
301 N BROOM STREET #100
MADISON, WI 53703
608-819-0260 PHONE
www.opnarchitects.com
opn@opnarchitects.com

All reports, plans, specifications, computer files, field data, notes and other documents and instruments prepared by OPN Architects, Inc. as instruments of service shall remain the property of OPN Architects, Inc. OPN Architects, Inc. shall retain all common law, statutory and other reserved rights, including the copyright thereto.

© 2017 OPN Architects, Inc.

Owner
City of Madison Fire Department
314 W. Dayton St.
Madison, WI 53703

Project
Madison Fire Station 14
3201 Dairy Drive
Madison, WI 53718

Civil Engineer
Snyder & Associates, Inc
5010 Voges Rd
Madison WI, 53718
P. 608-838-0444

Structural Engineer
IMEG
1800 Deming Way #200
Middleton, WI 53562
P. 608-223-9600

Mechanical Engineer
IMEG
1800 Deming Way #200
Middleton, WI 53562
P. 608-223-9600

Electrical Engineer
IMEG
1800 Deming Way #200
Middleton, WI 53562
P. 608-223-9600

Key Plan

Sheet Issue Date
BID DOCUMENTS 11/03/17

Revision Date

IMEG
1800 DEMING WAY, SUITE 200
MIDDLETON, WI 53562
608.223.9600 FAX: 608.836.0415
www.imegcorp.com
PROJECT # 17001140.00

IMEG CORP RESERVES PROPRIETARY RIGHTS, INCLUDING COPYRIGHTS, TO THIS DRAWING AND THE DATA SHOWN THEREON. SAID DRAWING AND/OR DATA ARE THE EXCLUSIVE PROPERTY OF IMEG CORP AND SHALL NOT BE USED OR REPRODUCED FOR ANY OTHER PROJECT WITHOUT THE EXPRESS WRITTEN APPROVAL AND PARTICIPATION OF IMEG CORP. © 2017 IMEG CORP.

REFERENCE SCALE IN INCHES
0 1 2 3

Drawing
GENERAL TECHNOLOGY EQUIPMENT SCHEDULE

City of Madison Contract No. **8027**
OPN Project No. **17207000**

T001

GENERAL NOTES:

1. REFER TO CIVIL SHEETS FOR FINAL LOCATION OF HAND HOLE AND CONDUITS.

KEYNOTES: (#)

1. PROVIDE HANDHOLE AT LOCATION INDICATED.
2. PROVIDE (2) 4" HIGH DENSITY POLYETHYLENE (HDPE) UNDERGROUND CONDUITS INTO BUILDING TO TECHNOLOGY ROOM TR-1 (I.T. 119). COORDINATE LOCATION OF STUB UP INTO MAIN TECHNOLOGY ROOM TR-1 (I.T. 119) WITH THE CITY OF MADISON IT DEPARTMENT BEFORE ROUGH-IN. THESE CONDUITS ARE FOR THE OPTICAL FIBER CABLING THAT IS BEING INSTALLED BY A DIFFERENT CONTRACT. REFER TO SHEET T101 FOR TECHNOLOGY ROOM TR-1 (I.T. 119) AND KEYNOTE #5 ON THAT SHEET FOR CONTINUATION AND ADDITIONAL INFORMATION.

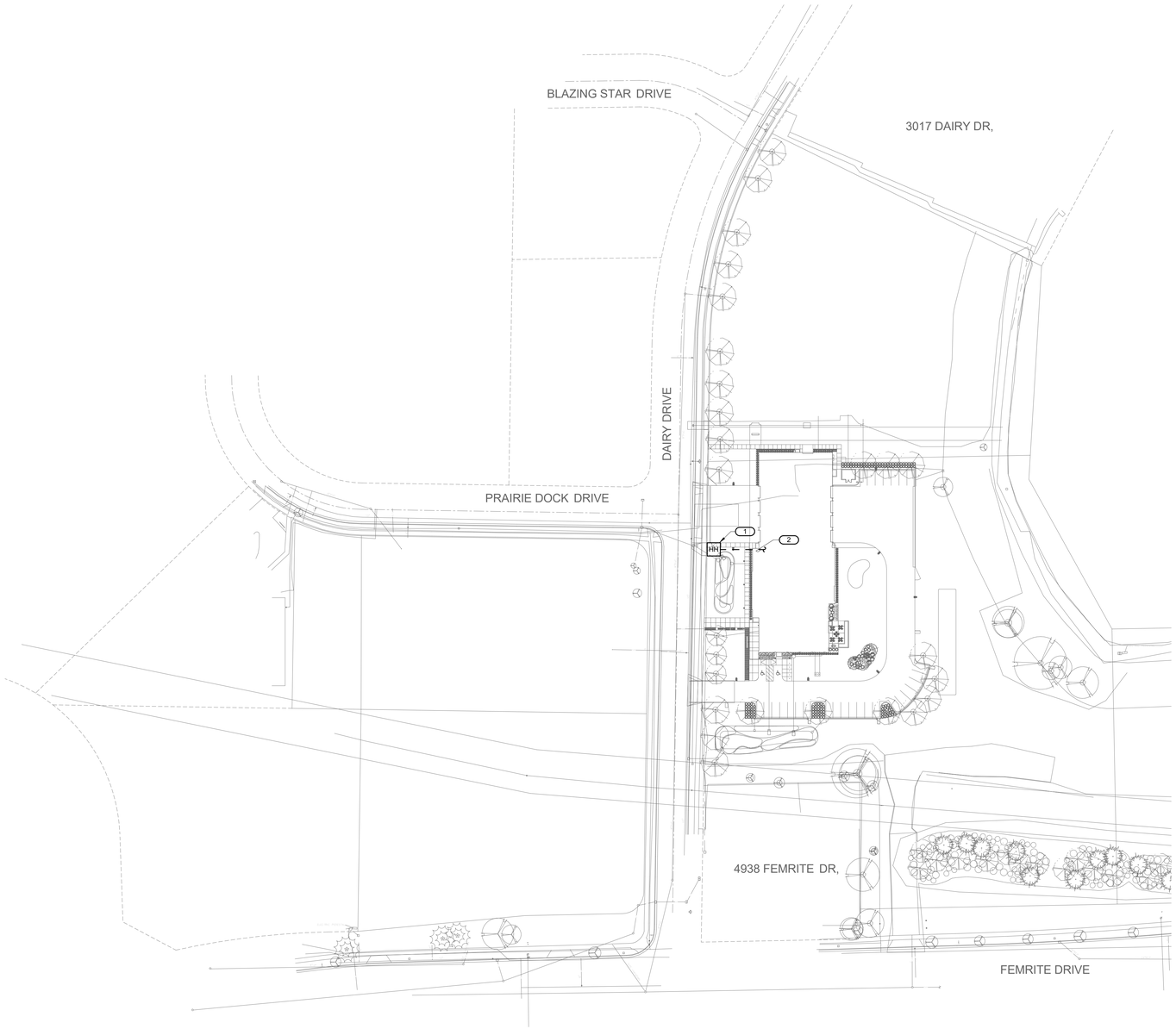

NORTH

1 **SITE PLAN - TECHNOLOGY**

1" = 60'-0"

OPN ARCHITECTS

301 N BROOM STREET #100
MADISON, WI 53703
608-819-0260 PHONE
www.opnarchitects.com
opn@opnarchitects.com

All reports, plans, specifications, computer files, field data, notes and other documents and instruments prepared by OPN Architects, Inc. as instruments of service shall remain the property of OPN Architects, Inc. OPN Architects, Inc. shall retain all common law, statutory and other reserved rights, including the copyright thereto.

© 2017 OPN Architects, Inc.

Owner

City of Madison Fire Department

314 W. Dayton St.
Madison, WI 53703

Project

Madison Fire Station 14

3201 Dairy Drive
Madison, WI 53718

Civil Engineer

Snyder & Associates, Inc

5010 Voges Rd
Madison WI, 53718
P. 608-838-0444

Structural Engineer

IMEG

1800 Deming Way #200
Middleton, WI 53562
P. 608-223-9600

Mechanical Engineer

IMEG

1800 Deming Way #200
Middleton, WI 53562
P. 608-223-9600

Electrical Engineer

IMEG

1800 Deming Way #200
Middleton, WI 53562
P. 608-223-9600

Key Plan

Sheet Issue Date

BID DOCUMENTS 11/03/17

Revision Date

IMEG

1800 DEMING WAY, SUITE 200
MIDDLETON, WI 53562
608.223.9600 FAX: 608.836.0415
www.imegcorp.com
PROJECT # 17001140.00

IMEG CORP RESERVES PROPRETARY RIGHTS, INCLUDING COPYRIGHTS, TO THIS DRAWING AND THE DATA SHOWN THEREON. SAID DRAWING AND/OR DATA ARE THE EXCLUSIVE PROPERTY OF IMEG CORP AND SHALL NOT BE USED OR REPRODUCED FOR ANY OTHER PROJECT WITHOUT THE EXPRESS WRITTEN APPROVAL AND PARTICIPATION OF IMEG CORP. © 2017 IMEG CORP.

REFERENCE SCALE IN INCHES

0 1 2 3

Drawing

SITE PLAN - TECHNOLOGY

City of Madison Contract No. **8027**
OPN Project No. **17207000**

T100

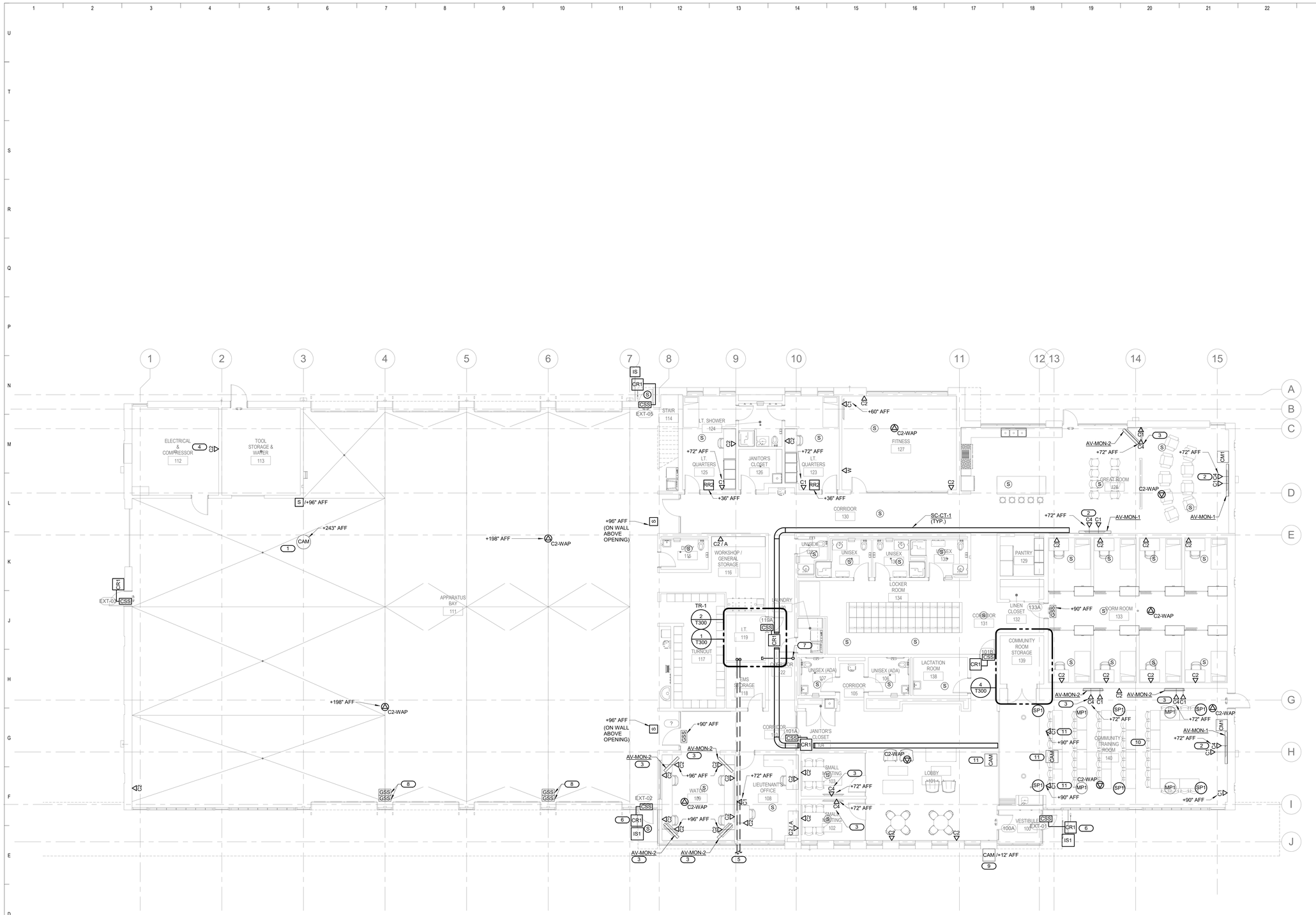

1 FLOOR PLAN LEVEL 1 - A - TECHNOLOGY

1/8" = 1'-0"

NORTH

GENERAL NOTES:

1. ALL INFORMATION OUTLETS ON THIS SHEET ARE SERVED FROM TECHNOLOGY ROOM TR-1 (I.T. 119).
2. REFER TO CONTROLLED SECURITY SCHEME (CSS) TYPE SCHEDULE ON SHEET T501.
3. REFER 1/T400 FOR FIBER AND COPPER RISER DIAGRAM .
4. REFER TO SHEET T500 FOR INFORMATION OUTLET SCHEDULE.
5. REFER TO DETAIL 1/T500 FOR ROUGH-IN MOUNTING DETAIL.
6. ROUTE ALL CONDUITS IN THE APPARATUS BAY TIGHT TO STRUCTURE IN THE BAY AND TO THE TECHNOLOGY ROOM TR-1 I.T. 119.
7. THERE ARE NUMEROUS DEVICES THAT ARE OFOI THAT REQUIRE THE CONTRACTOR TO PROVIDE BACKBOXES AND CONDUITS. REFER TO SPECIFICATION SECTIONS 27 20 00, 27 21 33, 27 41 23, 27 41 43. 28 20 00 FOR ADDITIONAL INFORMATION.

KEYNOTES: (#)

1. PROVIDE (1) SURFACE MOUNTED OUTLET AT THIS LOCATION (ALONG STRUCTURAL BEAM + 16' AFF) ALONG WITH A COIL OF 15 FEET OF CABLING FOR OWNER TO LOCATE IN FIELD.
2. CONTRACTOR TO CONFIRM HEIGHTS OF OUTLETS FOR AV-MON-1 BASED ON OWNER WALL MOUNTING MONITOR AV-MON-1 TO THIS WALL.
3. CONTRACTOR TO CONFIRM HEIGHTS OF OUTLETS FOR AV-MON-2 BASED ON OWNER WALL MOUNTING MONITOR AV-MON-2 TO THIS WALL.
4. PROVIDE INFORMATION OUTLET FOR PHOTOVOLTAIC CONNECTION. FIELD COORDINATE WITH INVERTER LOCATION BEING PROVIDED BY ELECTRICAL CONTRACTOR.
5. STUB UP THE (2) 4" HIGH DENSITY POLYETHYLENE (HDPE) UNDERGROUND CONDUITS INTO TECHNOLOGY ROOM TR-1 I.T. 119 FROM HANDHOLE. REFER TO SHEET T100 FOR CONTINUATION. PROVIDE PULL STRING IN CONDUITS. THESE CONDUITS ARE FOR FUTURE OPTICAL FIBER CABLING THAT WILL BE INSTALLED BY A DIFFERENT PROJECT.
6. CREDENTIAL READER IS TO BE MOUNTED ON EXTERIOR ADA BOLLARD. COORDINATE MOUNTING HEIGHT WITH ARCHITECT. ROUTE CABLING FOR ELECTRONIC ACCESS CONTROL SYSTEM IN MINIMUM 1" CONDUIT UNDERGROUND TO ABOVE DOOR FOR CONNECTIONS. REFER TO DETAIL 2/T501 FOR MORE INFORMATION.
7. (1) 3" CONDUIT ROUTED ABOVE ACCESSIBLE CEILING AND UP THROUGH ROOF FOR RADIO ANTENNA THAT WILL BE A PART OF THE G2 USDD FIRE STATION ALERTING SYSTEM. CONTRACTOR TO COORDINATE EXACT LOCATION OF CONDUIT AND PROVIDE ALL REQUIREMENTS FOR THE ANTENNA AS A COMPLETE PART OF THE SYSTEM. REFER TO 1/T102 FOR CONTINUATION.
8. CONTRACTOR TO COORDINATE BACK BOX, CONDUIT AND CABLING FOR DIGITAL GSS SIGN TO BE MOUNTED ON THE STRUCTURAL STEEL BEING INSTALLED IN THIS LOCATION (NOT THE GLASS). MOUNT SIGN AT HEIGHT OF 8'-0". BACKBOX IS TO BE FURNISHED BY OWNER AS PART OF SYSTEM.
9. PROVIDE (1) 1" CONDUIT FOR CABLING FOR CAMERA FROM THE EXTERIOR OF THE BUILDING TO THE INTERIOR CORRIDOR ABOVE THE ACCESSIBLE CEILING.
10. REFER TO 3/T400 FOR COMMUNITY/TRAINING ROOM 140 AUDIO/VIDEO CONNECTIVITY DIAGRAM.
11. THIS DEVICE IS TO BE MOUNTED ON BULKHEAD OVER MOVEABLE PARTITION. FIELD COORDINATE EXACT HEIGHT AND LOCATION BEFORE ROUGH-IN.

OPN ARCHITECTS

301 N BROOM STREET #100
MADISON, WI 53703
608-819-0260 PHONE
www.opnarchitects.com
opn@opnarchitects.com

All reports, plans, specifications, computer files, field data, notes and other documents and instruments prepared by OPN Architects, Inc. as instruments of service shall remain the property of OPN Architects, Inc. OPN Architects, Inc. shall retain all common law, statutory and other reserved rights, including the copyright thereto.

© 2017 OPN Architects, Inc.

Owner

City of Madison Fire Department
314 W. Dayton St.
Madison, WI 53703

Project

Madison Fire Station 14
3201 Dairy Drive
Madison, WI 53718

Civil Engineer

Snyder & Associates, Inc
5010 Voges Rd
Madison WI, 53718
P. 608-838-0444

Structural Engineer

IMEG
1800 Deming Way #200
Middleton, WI 53562
P. 608-223-9600

Mechanical Engineer

IMEG
1800 Deming Way #200
Middleton, WI 53562
P. 608-223-9600

Electrical Engineer

IMEG
1800 Deming Way #200
Middleton, WI 53562
P. 608-223-9600

Key Plan

Sheet Issue Date
BID DOCUMENTS 11/03/17

Revision Date

IMEG
1800 DEMING WAY, SUITE 200
MIDDLETON, WI 53562
608.223.9600 FAX: 608.836.0415
www.imegcorp.com
PROJECT # 170011400.00

IMEG CORP RESERVES PROPRIETARY RIGHTS, INCLUDING COPYRIGHTS, TO THIS DRAWING AND THE DATA SHOWN THEREON. SAID DRAWING AND/OR DATA ARE THE EXCLUSIVE PROPERTY OF IMEG CORP AND SHALL NOT BE USED OR REPRODUCED FOR ANY OTHER PROJECT WITHOUT THE EXPRESS WRITTEN APPROVAL AND PARTICIPATION OF IMEG CORP. © 2017 IMEG CORP.

REFERENCE SCALE IN INCHES
0 1 2 3

Drawing

FLOOR PLAN LEVEL 1 - TECHNOLOGY

City of Madison Contract No. **8027**
OPN Project No. **172070000**

T101

GENERAL NOTES:

1. ALL INFORMATION OUTLETS ON THIS SHEET ARE SERVED FROM TECHNOLOGY ROOM TR-1 (I.T. 119).
2. PROVIDE CONDUITS THROUGH THE FLOOR FOR ALL OUTLETS ON THIS FLOOR TO THE TECHNOLOGY ROOM TR-1 (I.T. 119).

KEYNOTES: (#)

1. FIELD COORDINATE INFORMATION OUTLET LOCATION WITH MECHANICAL CONTRACTOR.
2. PROVIDE INFORMATION OUTLET FOR DDC CONTROLS. COORDINATE OUTLET LOCATION AND ELEVATION WITH MECHANICAL CONTRACTOR.
3. (1) 3" CONDUIT THROUGH ROOF RADIO ANTENNA THAT WILL BE A PART OF THE G2 US DIGITAL DESIGN FIRE STATION ALTERNATING SYSTEM. CONTRACTOR TO COORDINATE EXACT LOCATION OF CONDUIT AND PROVIDE ALL REQUIREMENTS FOR THE ANTENNA AS A COMPLETE PART OF THE SYSTEM. REFER TO 1/T101 FOR CONTINUATION.
4. PROVIDE UNISTRUT ADJACENT TO MECHANICAL PANEL FOR MOUNTING OF DATA OUTLETS.

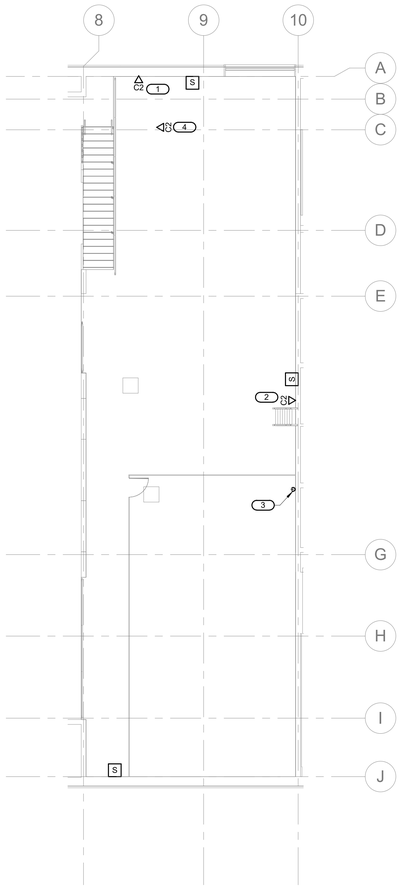

NORTH

1 MEZZANINE PLAN - TECHNOLOGY

1/8" = 1'-0"

IMEG

1800 DEMING WAY, SUITE 200
MIDDLETON, WI 53562
608.223.9600 FAX: 608.836.0415
www.imegcorp.com
PROJECT # 17001140.00

IMEG CORP RESERVES PROPRIETARY RIGHTS, INCLUDING COPYRIGHTS, TO THIS DRAWING AND THE DATA SHOWN THEREON. SAID DRAWING AND/OR DATA ARE THE EXCLUSIVE PROPERTY OF IMEG CORP AND SHALL NOT BE USED OR REPRODUCED FOR ANY OTHER PROJECT WITHOUT THE EXPRESS WRITTEN APPROVAL AND PARTICIPATION OF IMEG CORP. © 2017 IMEG CORP.

REFERENCE SCALE IN INCHES

0 1 2 3

OPN ARCHITECTS

301 N BROOM STREET #100
MADISON, WI 53703
608-819-0260 PHONE
www.opnarchitects.com
opn@opnarchitects.com

All reports, plans, specifications, computer files, field data, notes and other documents and instruments prepared by OPN Architects, Inc. as instruments of service shall remain the property of OPN Architects, Inc. OPN Architects, Inc. shall retain all common law, statutory and other reserved rights, including the copyright thereto.

© 2017 OPN Architects, Inc.

Owner

City of Madison Fire Department
314 W. Dayton St.
Madison, WI 53703

Project

Madison Fire Station 14
3201 Dairy Drive
Madison, WI 53718

Civil Engineer

Snyder & Associates, Inc
5010 Voges Rd
Madison WI, 53718
P. 608-838-0444

Structural Engineer

IMEG
1800 Deming Way #200
Middleton, WI 53562
P. 608-223-9600

Mechanical Engineer

IMEG
1800 Deming Way #200
Middleton, WI 53562
P. 608-223-9600

Electrical Engineer

IMEG
1800 Deming Way #200
Middleton, WI 53562
P. 608-223-9600

Key Plan

Sheet Issue Date

BID DOCUMENTS 11/03/17

Revision Date

Drawing

MEZZANINE PLAN - TECHNOLOGY

City of Madison Contract No. **8027**
OPN Project No. **17207000**

T102

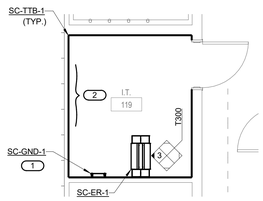

1 TECHNOLOGY ROOM TR-1 (I.T. 119) - ENLARGEMENT

1/4" = 1'-0"

NOTES:
1. COORDINATE ALL DEVICE LOCATIONS AND MOUNTING LOCATIONS IN TECHNOLOGY ROOM TR-1 (I.T. 119) ON SITE WITH OWNER'S IT STAFF PRIOR TO INSTALLATION.
2. REFER TO 2/T300 FOR TECHNOLOGY ROOM TR-1 (I.T. 119) PATHWAY LAYOUT.
3. REFER TO 1/T401 FOR TECHNOLOGY BONDING RISER DIAGRAM.

KEYNOTES:
1. REFER TO 2/T500 BONDING BUSBAR DETAIL FOR ADDITIONAL INFORMATION. INSTALL AT A HEIGHT OF 60" AFF TO THE TOP OF THE GROUND BAR.
2. WALL SPACE RESERVED FOR ELECTRONIC ACCESS CONTROL EQUIPMENT, TERMINATIONS AND CONNECTIONS (CONTROL PANELS, POWER SUPPLIES, ETC.). AC-DS-1, AC-PS-1 AND BATTERY BACKUP ARE TO BE MOUNTED HERE. REFER TO SPECIFICATION SECTION 28 13 00 FOR MORE INFORMATION.

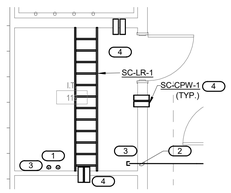

2 TECHNOLOGY ROOM TR-1 (I.T. 119) - PATHWAY LAYOUT

1/4" = 1'-0"

NOTES:
1. FURNISH AND INSTALL CABLE RUNWAY RADIUS DROPS AT ALL AREAS WHERE CABLE TRANSITIONS ON TO OR OFF OF HORIZONTAL CABLE RUNWAY. REFER TO 3/T500 FOR ADDITIONAL INFORMATION.

KEYNOTES:
1. (2) 4" CONDUITS STUBBED UP INTO TECHNOLOGY ROOM TR-1 (I.T. 119) FOR OPTICAL FIBER CABLE BEING PROVIDED BY CITY OF MADISON CONTRACTOR, AS PART OF ANOTHER CONTRACT. REFER TO SHEET T100 FOR CONTINUATION.
2. (1) 3" CONDUIT THROUGH ROOF FOR RADIO ANTENNA THAT WILL BE A PART OF THE G2 US DIGITAL DESIGN FIRE STATION ALERTING SYSTEM. CONTRACTOR TO COORDINATE EXACT LOCATION OF CONDUIT AND PROVIDE ALL REQUIREMENTS FOR THE ANTENNA AS A COMPLETE PART OF THE SYSTEM.
3. INSTALL D-RINGS FOR CONDUIT SUPPORT.
4. (2) 4" CONDUIT SLEEVES OUT OF ROOM FOR WORK AREA OUTLETS.

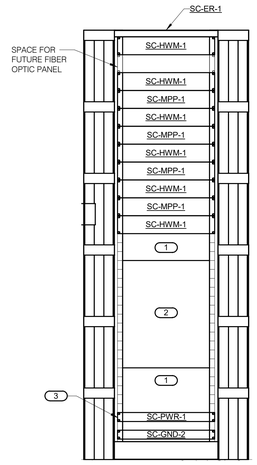

3 TECHNOLOGY ROOM TR-1 (I.T. 119) - RACK ELEVATION

1" = 1'-0"

NOTES:
1. COORDINATE ALL DEVICE LOCATIONS AND MOUNTING LOCATIONS IN TECHNOLOGY ROOM TR-1 (I.T. 119) ON SITE WITH OWNER'S IT STAFF PRIOR TO INSTALLATION.
2. FURNISH AND INSTALL CABLE RUNWAY RADIUS DROPS AT ALL AREAS WHERE CABLE TRANSITIONS ON TO OR OFF OF HORIZONTAL CABLE RUNWAY.
3. PROVIDE CABLE MANAGEMENT AND COORDINATE AC POWER AND VENTILATION REQUIREMENT.
4. ALLOW AT LEAST 3 RACK UNIT AT TOP OF THE MAIN RACK BELOW HORIZONTAL WIRE MANAGER FOR NEW OPTICAL FIBER CABLE PATCH PANEL THAT WILL BE INSTALLED BY ANOTHER PROJECT. DO NOT INSTALL HORIZONTAL WIRE AT THE VERY TOP OF THE RACK.
5. REFER TO DETAIL 3/T500 FOR LADDER RACK MOUNTING DETAIL.

KEYNOTES:
1. SPACE FOR OWNER PROVIDED EQUIPMENT (ETHERNET SWITCHES, ETC.). REFER TO SHEET 1/T400 FOR RISER DIAGRAM.
2. SPACE RESERVED IN RACK FOR US DIGITAL DESIGN (FIRE STATION ALERTING) EQUIPMENT. COORDINATE LOCATIONS AND EXACT SPACE REQUIRED WITH EQUIPMENT PROVIDED BY THE OWNER.
3. CONTRACTOR TO PROVIDE A RACK MOUNTED POWER STRIP WITH SURGE PROTECTION.

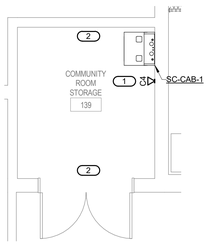

4 COMMUNITY ROOM STORAGE - 139 - ENLARGEMENT

1/4" = 1'-0"

KEYNOTES:
1. CONTRACTOR TO PROVIDE MIDDLE ATLANTIC PRODUCTS CABINET PART NUMBER CWR-26-26PD FOR INSTALLATION IN THIS ROOM FOR OWNER PROVIDE AUDIO/VIDEO EQUIPMENT. CONFIRM INSTALLATION WITH OWNER FOR MOUNTING BEFORE ROUGH-IN. WITHIN THE CABINET MOUNT THE POLYCOM AUDIO/VIDEO CODEC, THE POWER AMPLIFIER AND THE PORTABLE TABLE MOUNTED MICROPHONE. MOUNT SO BOTTOM OF CABINET IS AT 48 INCHES ABOVE THE FINISHED FLOOR. THIS WILL PROVIDE ACCESS TO DEVICES BEING INSTALLED WITHIN.
2. PROVIDE MINIMUM OF (2) 2" CONDUITS OUT OF THE ROOM ON THE EAST AND WEST WALLS ABOVE THE ACCESSIBLE CEILING FOR ROUTING OF AUDIO VISUAL CABLING TO EQUIPMENT THAT WILL BE LOCATED IN THE COMMUNITY / TRAINING ROOM 140 AND THE GREAT ROOM 128.

OPN ARCHITECTS
301 N BROOM STREET #100
MADISON, WI 53703
608-819-0260 PHONE
www.opnarchitects.com
opn@opnarchitects.com

All reports, plans, specifications, computer files, field data, notes and other documents and instruments prepared by OPN Architects, Inc. as instruments of service shall remain the property of OPN Architects, Inc. OPN Architects, Inc. shall retain all common law, statutory and other reserved rights, including the copyright thereto.

© 2017 OPN Architects, Inc.

Owner
City of Madison Fire Department
314 W. Dayton St.
Madison, WI 53703

Project
Madison Fire Station 14
3201 Dairy Drive
Madison, WI 53718

Civil Engineer
Snyder & Associates, Inc
5010 Voges Rd
Madison WI, 53718
P. 608-838-0444

Structural Engineer
IMEG
1800 Deming Way #200
Middleton, WI 53562
P. 608-223-9600

Mechanical Engineer
IMEG
1800 Deming Way #200
Middleton, WI 53562
P. 608-223-9600

Electrical Engineer
IMEG
1800 Deming Way #200
Middleton, WI 53562
P. 608-223-9600

IMEG
1800 DEMING WAY, SUITE 200
MIDDLETON, WI 53562
608.223.9600 FAX: 608.836.0415
www.imegcorp.com
PROJECT # 17001140.00

IMEG CORP RESERVES PROPRIETARY RIGHTS, INCLUDING COPYRIGHTS, TO THIS DRAWING AND THE DATA SHOWN THEREON. SAID DRAWING AND/OR DATA ARE THE EXCLUSIVE PROPERTY OF IMEG CORP AND SHALL NOT BE USED OR REPRODUCED FOR ANY OTHER PROJECT WITHOUT THE EXPRESS WRITTEN APPROVAL AND PARTICIPATION OF IMEG CORP. © 2017 IMEG CORP.

REFERENCE SCALE IN INCHES
0 1 2 3

Key Plan

Sheet Issue Date
BID DOCUMENTS 11/03/17

Revision	Date

Drawing
ENLARGED PLANS - TECHNOLOGY

City of Madison Contract No. **8027**
OPN Project No. **17207000**

T300

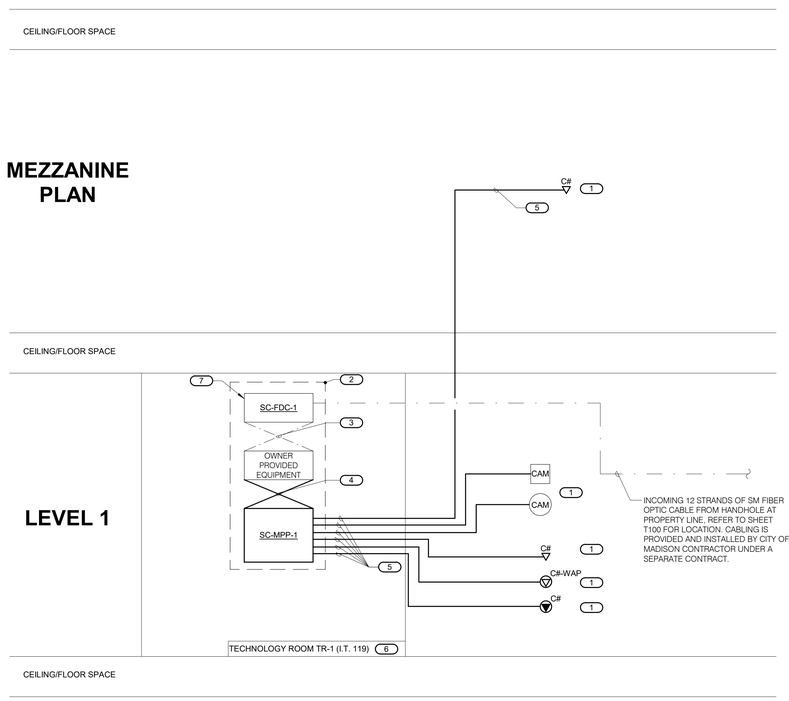

1 FIBER AND COPPER RISER DIAGRAM

NO SCALE

NOTES:
1. THIS RISER IS DIAGRAMMATIC AND MAY NOT SHOW ACTUAL ROUTING OR QUANTITIES OF MATERIALS SHOWN. THIS RISER IS SHOWN FOR CLARIFICATION OF CONNECTION(S), LOCATIONS AND CABLE TYPE. ALL INFORMATION OUTLETS ARE TYPICAL OF THE OUTLETS IN THE AREA SHOWN. REFER TO FLOOR PLANS FOR MORE SPECIFIC ROUTING INFORMATION. REFER TO SPECIFICATIONS FOR ADDITIONAL REQUIREMENTS.
2. REFER TO FLOOR PLANS FOR QUANTITY OF CABLES AND JACKS TO BE INSTALLED AT EACH INFORMATION OUTLET. REFER TO SHEET T500 FOR INFORMATION OUTLET SCHEDULE. REFER TO SHEET 3/T300 FOR RACK ELEVATION.

KEYNOTES:
1. C# INDICATES DATA FACEPLATE CONFIGURATION. REFER TO THE INFORMATION OUTLET SCHEDULE ON T500 FOR ADDITIONAL INFORMATION. REFER TO TECHNOLOGY FLOOR PLANS AND GENERAL TECHNOLOGY EQUIPMENT SCHEDULE FOR ADDITIONAL INFORMATION.
2. RACK AS DEFINED ON THE TELECOM ROOM LAYOUT. REFER TO THE TELECOM ROOM REFERENCES MATRIX ON THE COVER PAGE FOR LOCATION.
3. FIBER CONNECTIONS TO OWNER PROVIDED EQUIPMENT BY CITY OF MADISON CONTRACTOR UNDER A SEPARATE CONTRACT.
4. RJ-45 TO RJ-45 CATEGORY 6 UTP PATCH CORDS, REFER TO SPECIFICATIONS.
5. 23 GAUGE 4-PAIR, CATEGORY 6, UNSHIELDED TWISTED PAIR CABLE, REFER TO SPECIFICATIONS.
6. REFER TO SHEET T000 AND FLOOR PLANS T101 FOR TELECOM ROOM LOCATION.
7. FUTURE, BY CITY OF MADISON CONTRACTOR.

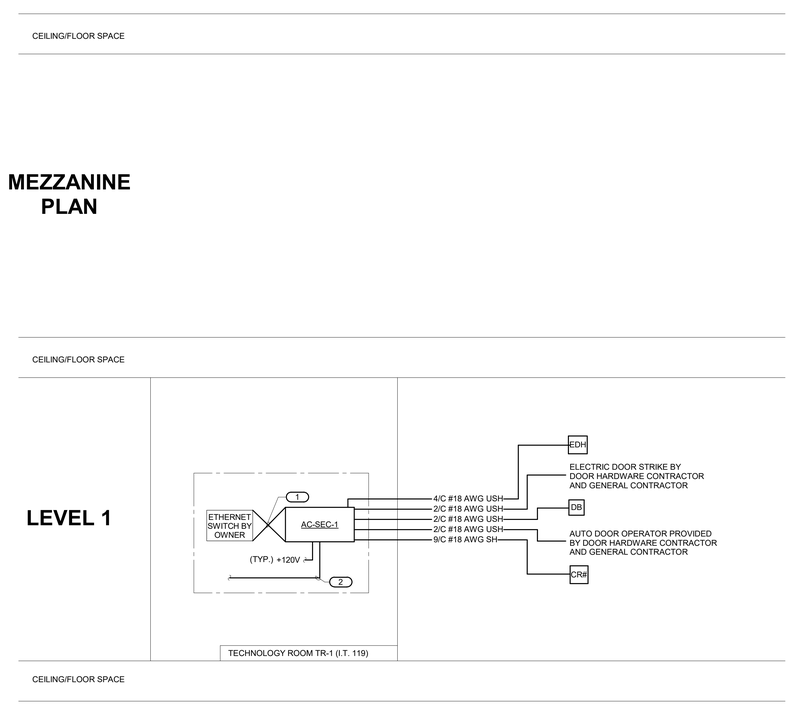

2 ACCESS CONTROL RISER DIAGRAM

NO SCALE

NOTES:
1. THIS DIAGRAM IS DIAGRAMMATIC AND MAY NOT SHOW ACTUAL DEVICE QUANTITIES OR LOCATIONS. ALL DEVICES SHOWN ARE TYPICAL AND MAY NOT REFLECT EVERY WIRE OR CONNECTION THAT MUST BE MADE. WIRING SHOWN ON THIS DIAGRAM REFLECTS THE REQUIREMENTS FOR THE BASIS OF DESIGN MANUFACTURER. ANY CHANGES REQUIRED DUE TO THE T.C.'S SELECTION OF AN ALTERNATE MANUFACTURER, INCLUDING ANY POWER REQUIRED FOR FIELD LOCATED SECURITY CONTROLLERS, SHALL BE INCLUDED IN THE T.C.'S BID.
2. ALL ACCESS CONTROL DEVICES AND CONTROLLER ARE BY CONTRACTOR, ALL BACKBOXES, CONDUITS AND CABLING IS BY CONTRACTOR.

KEYNOTES:
1. CATEGORY 6 RJ-45 TO RJ-45 PATCH CABLE.
2. CITY OF MADISON IT DEPARTMENT WILL COORDINATE THE CONNECTION BETWEEN THE FIRE ALARM SYSTEM.

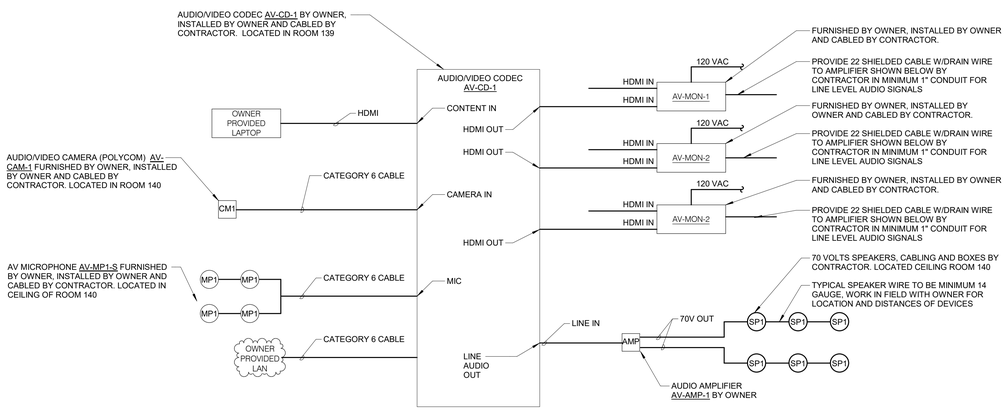

3 COMMUNITY/TRAINING ROOM 140 AUDIO/VIDEO CONNECTIVITY DIAGRAM

NO SCALE

NOTES:
1. ALL CABLING BY CONTRACTOR UNLESS NOTED OTHERWISE. MINIMUM SIZE CONDUIT SHALL BE 1" UNLESS NOTED OTHERWISE.

OPN ARCHITECTS
301 N BROOM STREET #100
MADISON, WI 53703
608-819-0260 PHONE
www.opnarchitects.com
opn@opnarchitects.com

All reports, plans, specifications, computer files, field data, notes and other documents and instruments prepared by OPN Architects, Inc. as instruments of service shall remain the property of OPN Architects, Inc. OPN Architects, Inc. shall retain all common law, statutory and other reserved rights, including the copyright thereto.

© 2017 OPN Architects, Inc.

Owner
City of Madison Fire Department
314 W. Dayton St.
Madison, WI 53703

Project
Madison Fire Station 14
3201 Dairy Drive
Madison, WI 53718

Civil Engineer
Snyder & Associates, Inc
5010 Voges Rd
Madison WI, 53718
P. 608-838-0444

Structural Engineer
IMEG
1800 Deming Way #200
Middleton, WI 53562
P. 608-223-9600

Mechanical Engineer
IMEG
1800 Deming Way #200
Middleton, WI 53562
P. 608-223-9600

Electrical Engineer
IMEG
1800 Deming Way #200
Middleton, WI 53562
P. 608-223-9600

Key Plan

Sheet Issue Date	
BID DOCUMENTS	11/03/17

Revision	Date

IMEG
1800 DEMING WAY, SUITE 200
MIDDLETON, WI 53562
608.223.9600 FAX: 608.836.0415
www.imegcorp.com
PROJECT # 17001140.00

IMEG CORP RESERVES PROPRIETARY RIGHTS, INCLUDING COPYRIGHTS, TO THIS DRAWING AND THE DATA SHOWN THEREON. SAID DRAWING AND/OR DATA ARE THE EXCLUSIVE PROPERTY OF IMEG CORP AND SHALL NOT BE USED OR REPRODUCED FOR ANY OTHER PROJECT WITHOUT THE EXPRESS WRITTEN APPROVAL AND PARTICIPATION OF IMEG CORP. © 2017 IMEG CORP.

REFERENCE SCALE IN INCHES
0 1 2 3

Drawing
RISER DIAGRAMS - TECHNOLOGY

City of Madison Contract No. **8027**
OPN Project No. **17207000**

T400

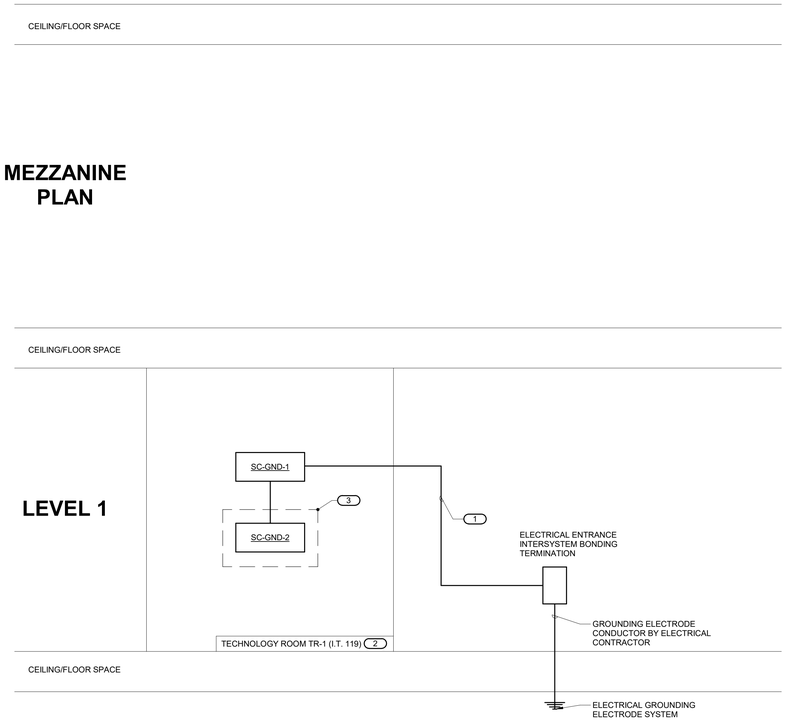

1 TECHNOLOGY BONDING RISER DIAGRAM

NO SCALE

NOTES:
1. THIS RISER IS DIAGRAMMATIC AND MAY NOT SHOW ACTUAL ROUTING OR QUANTITIES OF MATERIALS. THIS RISER IS SHOWN FOR CLARIFICATION OF CONNECTION LOCATIONS AND CONDUCTOR TYPE. ALL CONNECTIONS AND SYSTEM DEVICES SHOWN ARE TYPICAL AND NOT REPRESENTATIVE OF ACTUAL PROJECT QUANTITIES. REFER TO FLOOR PLANS AND ENLARGED FLOOR PLANS FOR ACTUAL QUANTITIES AND LOCATIONS OF DEVICES AND MORE SPECIFIC ROUTING INFORMATION. REFER TO SPECIFICATIONS FOR ADDITIONAL REQUIREMENTS.
2. ALL CONDUCTORS IN THE TECHNOLOGY BONDING SYSTEM SHALL BE MINIMUM SIZE OF 3/0 AWG PLENUM RATED COPPER (GREEN OR MARKED WITH A DISTINCTIVE GREEN COLOR) UNLESS CONDUCTOR LENGTH IS LESS THAN 66 FEET. REFER TO BONDING CONDUCTOR SIZING SCHEDULE FOR SIZING CRITERIA FOR CONDUCTORS LESS THAN 66 FEET IN LENGTH. REFER TO SPECIFICATIONS FOR ADDITIONAL REQUIREMENTS.
3. ALL BONDING CONDUCTORS AND BONDING JUMPERS SHALL BE CONNECTED BY COMPRESSION LUGS, EXOTHERMIC WELDING, OR IRREVERSIBLE COMPRESSION CONNECTORS. SOLDER IS NOT AN ACCEPTABLE MEANS OF CONNECTION. SHEET METAL SCREWS SHALL NOT BE USED TO CONNECT COMMUNICATIONS BONDING CONDUCTORS TO EQUIPMENT. WHERE NECESSARY, REMOVE PAINT AND/OR USE PAINT-PIERCING WASHERS TO PROVIDE PROPER ELECTRICAL BOND AT ALL CONNECTIONS.
4. REFER TO 2/T401 FOR TYPICAL TELECOM ROOM BONDING FLOW DIAGRAM.
5. REFER TO TELECOM ROOM REFERENCES SCHEDULE ON DRAWING T000 FOR TELECOM ROOM NUMBER AND LOCATION INFORMATION.
6. REFER TO 2/T500 FOR BONDING BUS BAR DETAIL.

KEYNOTES:
1. BONDING CONDUCTOR FOR TELECOMMUNICATIONS (BCT). BCT SHALL BE THE SAME SIZE AS THE TBB OR LARGER. REFER TO BONDING CONDUCTOR SIZING SCHEDULE FOR SIZING REQUIREMENTS.
2. REFER TO COVER PAGE AND FLOOR PLANS FOR TELECOM ROOM LOCATIONS.
3. RACK AS DEFINED ON THE TELECOM ROOM LAYOUT. REFER TO THE TELECOM ROOM REFERENCES MATRIX ON THE COVER PAGE FOR LOCATION.

BONDING CONDUCTOR SIZING SCHEDULE

CONDUCTOR LENGTH IN FEET	MINIMUM ACCEPTABLE SIZE - AWG
LESS THAN 13'	6
14' - 20'	4
21' - 26'	3
27' - 33'	2
34' - 41'	1
42' - 52'	1/0
53' - 66'	2/0
GREATER THAN 66'	3/0

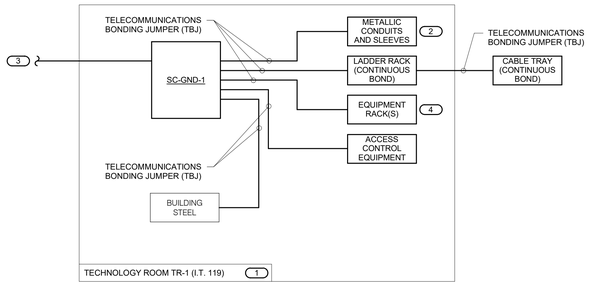

2 TYPICAL TELECOM ROOM BONDING FLOW DIAGRAM

NO SCALE

NOTES:
1. THIS FLOW DIAGRAM IS DIAGRAMMATIC AND MAY NOT SHOW ACTUAL ROUTING OR QUANTITIES OF MATERIALS. THIS FLOW DIAGRAM IS SHOWN FOR CLARIFICATION OF CONNECTION LOCATIONS AND CONDUCTOR TYPE. ALL CONNECTIONS AND SYSTEM DEVICES SHOWN ARE TYPICAL AND NOT REPRESENTATIVE OF ACTUAL PROJECT QUANTITIES. REFER TO FLOOR PLANS AND ENLARGED FLOOR PLANS FOR ACTUAL QUANTITIES AND LOCATIONS OF DEVICES AND MORE SPECIFIC ROUTING INFORMATION. REFER TO SPECIFICATIONS FOR ADDITIONAL REQUIREMENTS
2. ALL CONDUCTORS IN THE TECHNOLOGY BONDING SYSTEM SHALL BE MINIMUM SIZE OF 3/0 AWG PLENUM RATED COPPER (GREEN OR MARKED WITH A DISTINCTIVE GREEN COLOR) UNLESS CONDUCTOR LENGTH IS LESS THAN 66 FEET. REFER TO BONDING CONDUCTOR SIZING SCHEDULE FOR SIZING CRITERIA FOR CONDUCTORS LESS THAN 66 FEET IN LENGTH. REFER TO SPECIFICATIONS FOR ADDITIONAL REQUIREMENTS.
3. ALL BONDING CONDUCTORS AND BONDING JUMPERS SHALL BE CONNECTED BY COMPRESSION LUGS, EXOTHERMIC WELDING, OR IRREVERSIBLE COMPRESSION CONNECTORS. SOLDER IS NOT AN ACCEPTABLE MEANS OF CONNECTION. SHEET METAL SCREWS SHALL NOT BE USED TO CONNECT COMMUNICATIONS BONDING CONDUCTORS TO EQUIPMENT. WHERE NECESSARY, REMOVE PAINT AND/OR USE PAINT-PIERCING WASHERS TO PROVIDE PROPER ELECTRICAL BOND AT ALL CONNECTIONS.
4. REFER TO 2/T500 FOR BONDING BUS BAR DETAIL AND ADDITIONAL INFORMATION AND REQUIREMENTS FOR SC-GND-1.

KEYNOTES:
1. REFER TO TELECOM ROOM REFERENCES SCHEDULE ON DRAWING T000 FOR TELECOM ROOM NUMBER AND LOCATION INFORMATION.
2. INCLUDES HORIZONTAL AND VERTICAL CONDUIT SLEEVES FOR TECHNOLOGY CABLING.
3. BONDING CONDUCTOR FOR TELECOMMUNICATIONS (BCT), TO ELECTRICAL ENTRANCE INTERSYSTEM BONDING TERMINATION. REFER TO 1/T401 FOR TECHNOLOGY BONDING RISER DIAGRAM FOR CONTINUATION AND ADDITIONAL INFORMATION AND REQUIREMENTS.
4. PROVIDE SC-GND-2 RACK MOUNT TECHNOLOGY BONDING BUSBAR AT EACH EQUIPMENT RACK.

OPN ARCHITECTS
301 N BROOM STREET #100
MADISON, WI 53703
608-819-0260 PHONE
www.opnarchitects.com
opn@opnarchitects.com

All reports, plans, specifications, computer files, field data, notes and other documents and instruments prepared by OPN Architects, Inc. as instruments of service shall remain the property of OPN Architects, Inc. OPN Architects, Inc. shall retain all common law, statutory and other reserved rights, including the copyright thereto.

© 2017 OPN Architects, Inc.

Owner
City of Madison Fire Department
314 W. Dayton St.
Madison, WI 53703

Project
Madison Fire Station 14
3201 Dairy Drive
Madison, WI 53718

Civil Engineer
Snyder & Associates, Inc
5010 Voges Rd
Madison WI, 53718
P. 608-838-0444

Structural Engineer
IMEG
1800 Deming Way #200
Middleton, WI 53562
P. 608-223-9600

Mechanical Engineer
IMEG
1800 Deming Way #200
Middleton, WI 53562
P. 608-223-9600

Electrical Engineer
IMEG
1800 Deming Way #200
Middleton, WI 53562
P. 608-223-9600

Key Plan

Sheet Issue Date
BID DOCUMENTS 11/03/17

Revision Date

IMEG
1800 DEMING WAY, SUITE 200
MIDDLETON, WI 53562
608.223.9600 FAX: 608.836.0415
www.imegcorp.com
PROJECT # 170011440.00

IMEG CORP RESERVES PROPRIETARY RIGHTS, INCLUDING COPYRIGHTS, TO THIS DRAWING AND THE DATA SHOWN THEREON. SAID DRAWING AND/OR DATA ARE THE EXCLUSIVE PROPERTY OF IMEG CORP AND SHALL NOT BE USED OR REPRODUCED FOR ANY OTHER PROJECT WITHOUT THE EXPRESS WRITTEN APPROVAL AND PARTICIPATION OF IMEG CORP. © 2017 IMEG CORP.

REFERENCE SCALE IN INCHES
0 1 2 3

Drawing
RISER DIAGRAMS - TECHNOLOGY

City of Madison Contract No. **8027**
OPN Project No. **17207000**

T401

INFORMATION OUTLET SCHEDULE

SINGLE GANG WALLPLATES

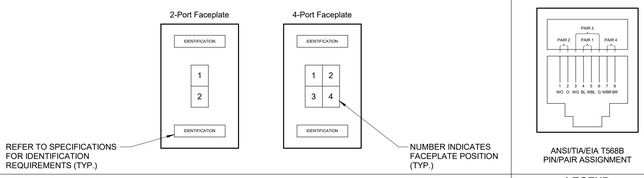

ANSI/TIA/EIA T568B PIN/PAIR ASSIGNMENT

LEGEND

DATA	CAT 6 RJ-45
BL	BLANK FILLER MODULE

CONFIGURATION	FACEPLATE PORTS	FACEPLATE PORT IDENTIFICATION						NOTES
		POSITION 1 JACK TYPE	POSITION 2 JACK TYPE	POSITION 3 JACK TYPE	POSITION 4 JACK TYPE	POSITION 5 JACK TYPE	POSITION 6 JACK TYPE	
C1	2	DATA	BL					
C2	2	DATA	DATA					
C2-WAP	2	DATA	DATA					1.
C4	4	DATA	DATA	DATA	DATA			

NOTES:
1. PROVIDE REMOVABLE BLANK INSERT(S) FOR ALL UNUSED PORTS.

SCHEDULE NOTES:
1. LOCATION OF FUTURE OR OWNER PROVIDED WIRELESS ACCESS POINT. PROVIDE A 25' SLACK COIL AT THE NEAREST CABLE SUPPORT FOR POSSIBLE RELOCATION AFTER WIRELESS SURVEY.

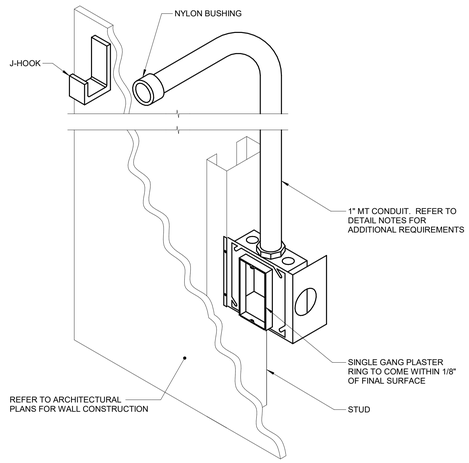

1 TECHNOLOGY ROUGH-IN MOUNTING DETAIL

NO SCALE

NOTES:
1. 1" EMT CONDUIT SHALL STUB UP TO NEAREST ACCESSIBLE CEILING AND TERMINATE ORIENTED HORIZONTALLY AT THE HEIGHT OF THE ASSOCIATED CABLE TRAY ROUTE. CONDUIT RUN SHALL NOT CONTAIN MORE THAN 180 DEGREES OF BEND BETWEEN ACCESSIBLE JUNCTION BOXES OR BETWEEN JUNCTION BOX AND END OF CONDUIT.
2. WHERE CONDUIT STUB IS LOCATED IN A ROOM WITH AN ACCESSIBLE CEILING AND IS NOT REQUIRED TO RUN TO CABLE ROUTE LOCATED OUTSIDE THE ROOM, STUB MUST TERMINATE ABOVE THE ACCESSIBLE CEILING WITH A 90-DEGREE BEND AT THE TOP ORIENTED IN TO THE ROOM AT THE HEIGHT OF THE ASSOCIATED CABLE TRAY OR J-HOOK ROUTE IN THE ROOM.
3. ALL STUBS MUST BE FITTED WITH A NYLON BUSHING ON EACH END OF THE CONDUIT.
4. INSTALLING CONTRACTOR SHALL FURNISH AND INSTALL FIRESTOP MATERIALS FOR TECHNOLOGY ROUGH-INS PER PROJECT REQUIREMENTS. REFER TO SPECIFICATIONS FOR FIRESTOP REQUIREMENTS.

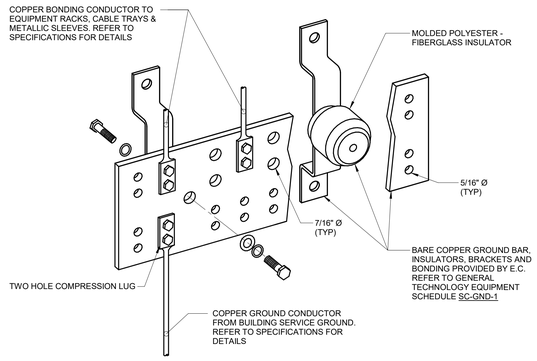

2 BONDING BUS BAR DETAIL

NO SCALE

NOTES:
1. REFER TO GENERAL TECHNOLOGY EQUIPMENT SCHEDULE SC-GND-1 FOR WIDTH REQUIREMENTS.
2. REFER TO 2/T401 FOR TYPICAL TELECOM ROOM BONDING FLOW DIAGRAM.

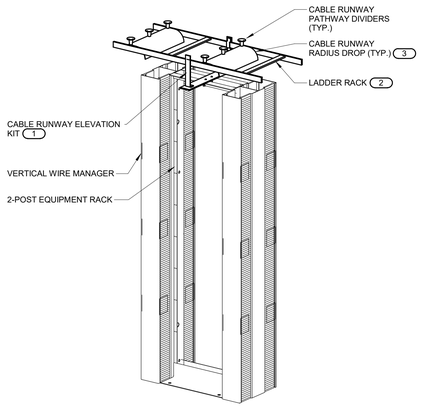

3 LADDER RACK MOUNTING DETAIL

NO SCALE

NOTES:
1. ALL LADDER RACK AND ACCESSORIES TO BE INSTALLED FOR A COMPLETE INSTALLATION SHALL BE FROM THE SAME MANUFACTURER.

KEYNOTES:
1. MOUNT THE LADDER RACK NO MORE THAN +6" ABOVE THE FLOOR MOUNTED RACK. ADJUST THE CABLE RUNWAY ELEVATION KIT AS REQUIRED.
2. REFER TO THE INDIVIDUAL PATHWAY DRAWINGS FOR THE LADDER RACK SIZE.
3. A MINIMUM OF (1) RADIUS DROP INTO EACH VERTICAL WIRE MANAGER. REFER TO THE INDIVIDUAL TELECOM ROOM LAYOUTS, PATHWAY LAYOUTS, AND RACK ELEVATIONS FOR QUANTITY OF WIRE MANAGERS AND ADDITIONAL INFORMATION.

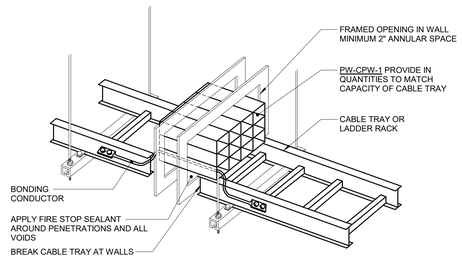

4 FIRE RATED CABLE PATHWAY DETAIL

NO SCALE

NOTES:
1. REFER TO SPECIFICATION SECTION [17080][27 05 03] THROUGH PENETRATION FIRESTOPPING FOR ADDITIONAL INFORMATION.
2. REFER TO SPECIFICATIONS FOR LADDER RACK AND CABLE TRAY INFORMATION. LADDER TYPE CABLE TRAY IS ONLY SHOWN FOR CLARITY OF ILLUSTRATION.
3. PROVIDE GROUNDING LUGS WITH SC-CPW-1 AND BOND TO GROUND PER MANUFACTURERS INSTRUCTIONS.
4. PROVIDE #6 AWG GREEN COPPER GROUND WIRE BETWEEN SECTIONS OF CABLE TRAY TO MAINTAIN CONTINUOUS GROUND. ATTACH TO CABLE TRAY WITH MANUFACTURER APPROVED GROUNDING CLAMPS OR LUGS.

IMEG
1800 DEMING WAY, SUITE 200
MIDDLETON, WI 53562
608.223.9600 FAX: 608.836.0415
www.imegcorp.com
PROJECT # 17001140.00

IMEG CORP RESERVES PROPRIETARY RIGHTS, INCLUDING COPYRIGHTS, TO THIS DRAWING AND THE DATA SHOWN THEREON. SAID DRAWING AND/OR DATA ARE THE EXCLUSIVE PROPERTY OF IMEG CORP AND SHALL NOT BE USED OR REPRODUCED FOR ANY OTHER PROJECT WITHOUT THE EXPRESS WRITTEN APPROVAL AND PARTICIPATION OF IMEG CORP. © 2017 IMEG CORP.

REFERENCE SCALE IN INCHES
0 1 2 3

OPN ARCHITECTS
301 N BROOM STREET #100
MADISON, WI 53703
608-819-0260 PHONE
www.opnarchitects.com
opn@opnarchitects.com

All reports, plans, specifications, computer files, field data, notes and other documents and instruments prepared by OPN Architects, Inc. as instruments of service shall remain the property of OPN Architects, Inc. OPN Architects, Inc. shall retain all common law, statutory and other reserved rights, including the copyright thereto.

© 2017 OPN Architects, Inc.

Owner
City of Madison Fire Department
314 W. Dayton St.
Madison, WI 53703

Project
Madison Fire Station 14
3201 Dairy Drive
Madison, WI 53718

Civil Engineer
Snyder & Associates, Inc
5010 Voges Rd
Madison WI, 53718
P. 608-838-0444

Structural Engineer
IMEG
1800 Deming Way #200
Middleton, WI 53562
P. 608-223-9600

Mechanical Engineer
IMEG
1800 Deming Way #200
Middleton, WI 53562
P. 608-223-9600

Electrical Engineer
IMEG
1800 Deming Way #200
Middleton, WI 53562
P. 608-223-9600

Key Plan

Sheet Issue Date
BID DOCUMENTS 11/03/17

Revision Date

Drawing
DETAILS AND SCHEDULES - TECHNOLOGY

City of Madison Contract No. **8027**
OPN Project No. **17207000**

T500

CONTROLLED SECURITY SCHEME (CSS) TYPE SCHEDULE

ELECTRONIC DOOR HARDWARE SUCH AS ELECTRIC STRIKES, ELECTRIC LATCH RETRACTION, ETC. SHALL BE PROVIDED AND INSTALLED BY DOOR HARDWARE CONTRACTOR AND GENERAL CONTRACTOR. REFER TO THE GENERAL TECHNOLOGY EQUIPMENT SCHEDULE ON T001 FOR CREDENTIAL READER TYPE INFORMATION.

		CREDENTIAL READER				INTEGRATION								REQUEST TO EXIT		DOOR HARDWARE							OTHER (REFER TO NOTES)				
DOOR #	ROUGH-IN ONLY	CREDENTIAL READER TYPE	MULTIPLE CREDENTIAL READERS OPERATES SINGLE DOOR	OPERATES MULTIPLE DOORS	WIRELESS	AUTOMATIC DOOR OPERATOR	ELEVATOR	LOCKED BY EMERGENCY DURESS SEQUENCE	REMOTE UNLOCK VIA INTERCOM MASTER	REMOTE UNLOCK VIA PUSHBUTTON	INTRUSION DETECTION	REMOTE UNLOCK VIA FIRE COMMAND CENTER	VIDEO SURVEILLANCE	WANDER PREVENTION SYSTEM	REQUEST TO EXIST DEVICE	LOCAL PUSHBUTTON DOOR HARDWARE OVERRIDE	MOTION DETECTOR	ELECTRIC STRIKE	MAG LOCK	LATCH STATUS DETECTION	LOCAL ALARM HORN	MONITOR LATCH BOLT	MONITOR DOOR POSITION SWITCH SPDT	MONITOR DOOR POSITION SWITCH DPDT	MONITOR DOOR POSITION SWITCH FOR OVERHEAD DOOR	ACTUATOR FOR AUTO OPERATOR	LOCAL 120VAC POWER SUPPLY	SCHEDULE BASED LOCKING	VISUAL STROBE	NOTES
101A		CR1																•								•					
101B		CR1																•													
119A		CR1																•													
EXT-01		CR1																•													
EXT-02		CR1																•													
EXT-03		CR1																•													
EXT-05		CR1																•													

NOTES:

1. REFER TO 1/T501 FOR CONTROLLED SECURITY SCHEME DOOR ROUGH-IN DETAIL.

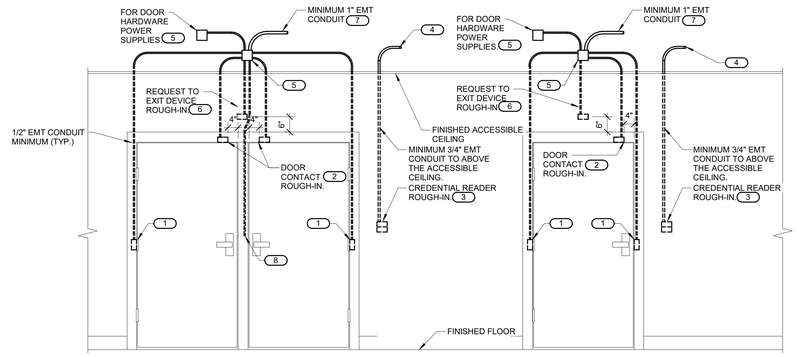

DOOR FRAME ROUGH-IN DIAGRAM
(ALL DOUBLE DOORS WITH OR WITHOUT MULLION)

DOOR FRAME ROUGH-IN DIAGRAM
(ALL SINGLE DOORS)

1 CONTROLLED SECURITY SCHEME DOOR ROUGH-IN DETAIL

NO SCALE

NOTES:

1. CONFIGURATIONS SHOWN IN THE DETAIL ABOVE ARE DIAGRAMMATIC, INTENDED TO DESCRIBE THE CONTROLLED SECURITY SCHEME ROUGH-IN REQUIREMENTS OF THE DOORS. DETAILS ABOVE MAY NOT ACCURATELY REPRESENT DOOR SIZE, DOOR SWING, DOOR HARDWARE, OR DOOR FUNCTIONALITY. REFER TO ARCHITECTURAL DOOR HARDWARE SCHEDULE, DOOR HARDWARE GROUPS AND DOOR HARDWARE SPECIFICATIONS FOR COMPLETE INFORMATION. MIRROR THE DETAIL AS REQUIRED.
2. ROUGH IN SHOWN IN THE DETAIL ABOVE REPRESENTS THE MINIMUM REQUIREMENTS FOR ALL CONTROLLED SECURITY SYSTEM DEVICES AND CABLING UNLESS OTHERWISE NOTED. COORDINATE EXACT REQUIREMENTS WITH SELECTED DOOR MATERIALS, DOOR HARDWARE, AND CONTROLLED SECURITY DEVICES AND CABLING PRIOR TO INSTALLATION.
3. ALL CABLING IN WALLS AND WHERE EXPOSED ON VERTICAL SURFACES SHALL BE INSTALLED IN EMT CONDUIT OR SURFACE MOUNT RACEWAY. CABLING ROUTED HORIZONTALLY ABOVE THE ACCESSIBLE CEILING MAY BE INSTALLED FREE-AIR CABLING PROPERLY RATED FOR THE CEILING ENVIRONMENT.
4. THE ELECTRICAL OR SECURITY CONTRACTOR SHALL NOT MODIFY ANY FIRE RATED DOOR AND/OR DOOR FRAME. REFER TO THE ARCHITECTURAL DOOR SCHEDULE, DOOR HARDWARE SCHEDULE, AND DOOR HARDWARE SPECIFICATION FOR ADDITIONAL INFORMATION. MODIFICATION TO ANY FIRE RATED DOOR AND/OR FRAME WILL REQUIRE A RE-CERTIFICATION OF THE DOOR AND FRAME WITH THE LOCAL AUTHORITY HAVING JURISDICTION (AHJ).
5. INSTALLING CONTRACTOR SHALL FURNISH AND INSTALL FIRESTOP MATERIALS FOR ALL CONTROLLED SECURITY SCHEME ROUGH-INS PER PROJECT REQUIREMENTS. REFER TO SPECIFICATIONS FOR ADDITIONAL INFORMATION AND REQUIREMENTS.
6. REFER TO THE ACCESS CONTROL RISER DIAGRAM ON 2/T400 FOR CABLING REQUIREMENTS AND THE CONTROLLED SECURITY SCHEME (CSS) TYPE SCHEDULE ON T501 FOR ADDITIONAL INFORMATION.
7. INSTALLATION SHALL INCLUDE ALL POWER REQUIRED FOR SYSTEM OPERATION INCLUDING +120VAC. REFER TO THE SUGGESTED MATRIX OF SCOPE RESPONSIBILITY FOR ADDITIONAL INFORMATION.

KEYNOTES:

1. PROVIDE JUNCTION BOXES IN THE DOOR FRAME WHERE SHOWN ON THIS DETAIL. ROUGH-IN SHALL BE PROVIDED WHETHER THE CURRENT SECURITY SCHEME UTILIZES THEM OR NOT. ALL CONDUITS SHALL BE EMT CONDUIT UNLESS OTHERWISE NOTED. FLEXIBLE CONDUIT OF ANY TYPE WILL NOT BE ACCEPTED. COORDINATE INSTALLATION WITH ON-SITE DOOR FRAME INSTALLATION CONTRACTOR.
2. ALL DOOR POSITION SWITCHES ARE REQUIRED TO BE RECESSED UNLESS OTHERWISE NOTED. ELECTRIC HINGE MONITORS ARE NOT AN ACCEPTABLE REPLACEMENT FOR THE RECESSED DOOR POSITION SWITCH.
3. DOUBLE GANG BACKBOX WITH SINGLE GANG PLASTER RING. REFER TO FLOOR PLAN(S) FOR ACTUAL CREDENTIAL READER TYPE AND ROUGH-IN LOCATIONS.
4. CONDUIT SHALL ROUTE FROM THE CREDENTIAL READER TO THE SECURE SIDE OF THE DOOR. CONDUIT SHALL ROUTE [A MINIMUM OF 12" FROM THE JUNCTION BOX.][TO THE NEAREST TECHNOLOGY ROOM.][TO NEAREST CABLE TRAY.][TO THE NEAREST SECURITY PANEL.][TO THE MAIN TECHNOLOGY ROOM][PROVIDE A NYLON BUSHING ON CONDUIT END].
5. MOUNT A MINIMUM 4" SQUARE 2-1/8" DEEP JUNCTION BOX WITH BLANK COVER PLATE ON THE SECURE SIDE OF THE DOOR ABOVE ACCESSIBLE CEILING. INSTALLING CONTRACTOR SHALL SIZE THE JUNCTION BOXES PER SYSTEM INSTALLATION REQUIREMENTS AND APPLICABLE CODES. MAINTAIN ACCESS TO THE JUNCTION BOX.
6. PROVIDE A HORIZONTALLY MOUNTED SINGLE GANG BACKBOX FOR THE REQUEST TO EXIT SENSOR. REFER TO THE CONTROLLED SECURITY SCHEME TYPE SCHEDULE ON T501 FOR DOORS THAT REQUIRE THIS ROUGH-IN.
7. CONDUIT SHALL ROUTE [A MINIMUM OF 12" FROM THE JUNCTION BOX.][TO THE NEAREST TECHNOLOGY ROOM.][TO NEAREST CABLE TRAY.][TO THE NEAREST SECURITY PANEL.][TO THE MAIN TELECOM ROOM][PROVIDE A NYLON BUSHING ON CONDUIT END].
8. CONDUIT INSTALLED IN PERMANENT MULLIONS ONLY. REFER TO THE ARCHITECTURAL DOOR SCHEDULE AND DOOR HARDWARE GROUPS FOR LOCATIONS THAT REQUIRE THIS ROUGH-IN. PROVIDE A NYLON BUSHING ON THE CONDUIT END.

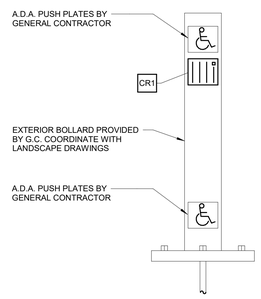

2 EXTERIOR BOLLARD MOUNT CARD READER DETAIL

NO SCALE

NOTES:

1. ACCESS CONTROL WIRING SHALL BE INSTALLED IN 1" RIGID GALVANIZED STEEL CONDUIT. COORDINATE WITH BOLLARD PROVIDER.
2. CARD READER SHALL BE FLUSH MOUNTED.
3. CARD READER SHALL BE MOUNTED AS HIGH AS POSSIBLE UNDER THE TOP PUSH PLATE.

IMEG
1800 DEMING WAY, SUITE 200
MIDDLETON, WI 53562
608.223.9600 FAX: 608.836.0415
www.imegcorp.com
PROJECT # 170011A0.00

IMEG CORP RESERVES PROPRIETARY RIGHTS, INCLUDING COPYRIGHTS, TO THIS DRAWING AND THE DATA SHOWN THEREON. SAID DRAWING AND/OR DATA ARE THE EXCLUSIVE PROPERTY OF IMEG CORP AND SHALL NOT BE USED OR REPRODUCED FOR ANY OTHER PROJECT WITHOUT THE EXPRESS WRITTEN APPROVAL AND PARTICIPATION OF IMEG CORP. © 2017 IMEG CORP.

REFERENCE SCALE IN INCHES
0 1 2 3

OPN ARCHITECTS
301 N BROOM STREET #100
MADISON, WI 53703
608-819-0260 PHONE
www.opnarchitects.com
opn@opnarchitects.com

All reports, plans, specifications, computer files, field data, notes and other documents and instruments prepared by OPN Architects, Inc. as instruments of service shall remain the property of OPN Architects, Inc. OPN Architects, Inc. shall retain all common law, statutory and other reserved rights, including the copyright thereto.

© 2017 OPN Architects, Inc.

Owner
City of Madison Fire Department
314 W. Dayton St.
Madison, WI 53703

Project
Madison Fire Station 14
3201 Dairy Drive
Madison, WI 53718

Civil Engineer
Snyder & Associates, Inc
5010 Voges Rd
Madison WI, 53718
P. 608-838-0444

Structural Engineer
IMEG
1800 Deming Way #200
Middleton, WI 53562
P. 608-223-9600

Mechanical Engineer
IMEG
1800 Deming Way #200
Middleton, WI 53562
P. 608-223-9600

Electrical Engineer
IMEG
1800 Deming Way #200
Middleton, WI 53562
P. 608-223-9600

Key Plan

Sheet Issue Date
BID DOCUMENTS 11/03/17

Revision Date

Drawing
DETAILS AND SCHEDULES - TECHNOLOGY

City of Madison Contract No. **8027**
OPN Project No. **17207000**

T501

VIEW KEY

NAME — LEVEL NAME
10' - 0" — HEIGHT ABOVE PROJECT 0' - 0"

1 — INDICATES NOTE USED TO DESCRIBE ADDITIONAL INFORMATION ABOUT WORK REQUIRED, SPECIFIC TO THE SHEET AND/OR DETAIL

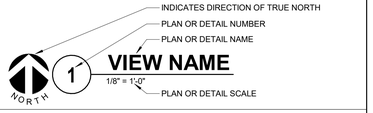

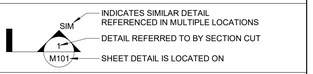

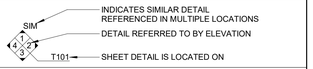

LINE TYPE KEY:

- NEW WORK BY THIS CONTRACTOR (DARK SOLID LINE)
- NEW WORK UNDERFLOOR OR UNDERGROUND BY THIS CONTRACTOR (DARK LONG DASHED LINE)
- NEW WORK BY OTHERS (LIGHT SOLID LINE)

FIRE / SMOKE BARRIER DESIGNATIONS

REFER TO ARCHITECTURAL LIFE SAFETY PLANS FOR WALL AND FLOOR RATINGS.

FIRE PROTECTION SYMBOL LIST

NOT ALL SYMBOLS MAY APPLY.

SYMBOL:	DESCRIPTION:
DFP	DRAIN
FP	FIRE PROTECTION
W	SERVICE WATER - POTABLE
	PIPE CAP
	PIPE DOWN
	PIPE UP OR UP/DOWN
	NEW CONNECTION
	UNION/FLANGE
	DIRECTION OF FLOW IN PIPE
	SHUTOFF VALVE NORMALLY OPEN
	ANGLE VALVE
	BUTTERFLY VALVE WITH MONITOR SWITCH
	CHECK VALVE
	INSPECTOR TEST AND DRAIN VALVE
	OS&Y GATE VALVE
	OS&Y GATE VALVE WITH MONITOR SWITCH
F	FLOW SWITCH
P	PRESSURE SWITCH
P	PRESSURE GAUGE (FURNISHED WITH BALL VALVE)
	MONITOR SWITCH
NO HATCH	LIGHT HAZARD
	ORDINARY GROUP 1
	ORDINARY GROUP 2

FIRE PROTECTION ABBREVIATION KEY

ABBR:	DESCRIPTION:
AD	ACCESS DOOR
AFF	ABOVE FINISHED FLOOR
BFP	BACKFLOW PREVENTER
I.E.	INVERT ELEVATION
NC	NEW CONNECTION
N.C.	NORMALLY CLOSED
NIC	NOT IN CONTRACT
N.O.	NORMALLY OPEN
TYP	TYPICAL
UNO	UNLESS NOTED OTHERWISE

CONTACT PERSONS:

DESCRIPTION:	PERSON:
PROJECT MANAGER	TIM PAAP
MECHANICAL ENGINEER	PAUL HANSEN
ELECTRICAL ENGINEER	TIM PAAP
TECHNOLOGY ENGINEER	GWEN BROMME
STRUCTURAL ENGINEER	ABBY PERTZBORN

FIRE HYDRANT FLOW TEST DATA

TEST DATE:	06/23/2017
RESIDUAL HYDRANT #: HYDRANT ELEVATION:	HYDR - 6958 - 4 864'
STATIC PRESSURE: RESIDUAL PRESSURE:	70 psi 52 psi
TOTAL FLOW:	2980 GPM
SIZE OF MAIN:	10"

CONTRACTOR ABBREVIATION KEY

ABBR:	DESCRIPTION:
T.C.C.	AUTOMATIC TEMPERATURE CONTROL CONTRACTOR
A.V.C.	AUDIO/VISUAL CONTRACTOR
C.C.	CIVIL CONTRACTOR
C.M.	CONSTRUCTION MANAGER
E.C.	ELECTRICAL CONTRACTOR
F.P.C.	FIRE PROTECTION CONTRACTOR
F.S.C.	FOOD SERVICE CONTRACTOR
G.C.	GENERAL CONTRACTOR
H.C.	HEATING CONTRACTOR
M.C.	MECHANICAL CONTRACTOR
P.C.	PLUMBING CONTRACTOR
S.C.	SECURITY CONTRACTOR
T.C.	TECHNOLOGY CONTRACTOR
T.C.C.	TEMPERATURE CONTROLS CONTRACTOR
V.C.	VENTILATION CONTRACTOR

FIRE PROTECTION SHEET INDEX

Sheet Number	Sheet Name
F000	FIRE PROTECTION COVER SHEET
F100	RISER DIAGRAM - FIRE PROTECTION
F101	FLOOR PLAN LEVEL 1 - FIRE PROTECTION
F102	MEZZANINE PLAN - FIRE PROTECTION

FIRE PROTECTION GENERAL NOTES:

1. THE SYMBOLS AND THE MATERIAL LIST ARE FOR THE CONVENIENCE OF THE CONTRACTOR. CONTRACTOR SHALL VERIFY QUANTITIES AND FURNISH ALL MATERIALS REQUIRED FOR FULLY OPERATIONAL SYSTEMS, WHETHER SPECIFIED OR NOT.
2. CATALOG NUMBERS SHALL NOT BE CONSIDERED COMPLETE, BUT ARE GIVEN AS AN AID TO THE CONTRACTOR AND TO INDICATE THE QUALITY REQUIRED. CONTRACTOR IS RESPONSIBLE FOR COMPLETE DESCRIPTION OF MATERIAL ON THESE DRAWINGS AND IN THE SPECIFICATIONS BEFORE ORDERING. THE DESCRIPTION OF THE MATERIAL TAKES PRECEDENCE OVER THE CATALOG NUMBER. THE FIRST MANUFACTURER IS THE BASIS OF DESIGN.
3. FIRE PROTECTION PIPE ROUTING IS SHOWN FOR GENERAL LAYOUT. DETERMINE EXACT NUMBER OF SPRINKLERS, PIPE SIZING, AND PIPE ROUTING.
4. CENTER SPRINKLERS IN CEILING TILES IN BOTH DIRECTIONS IN ALL AREAS. IN AREAS WITH 2'X4' CEILING TILES CENTERING USING A 2'X2' CEILING PATTERN IS ACCEPTABLE.
5. NEW SPRINKLERS SHALL BE QUICK RESPONSE TYPE, UNLESS OTHERWISE NOTED. CONTRACTOR SHALL NOT MIX STANDARD RESPONSE SPRINKLERS WITH QUICK RESPONSE SPRINKLERS IN UNPARTITIONED SPACES.
6. PROVIDE COVERAGE ABOVE AND BELOW ALL DUCTWORK GREATER THAN 48" WIDE.
7. PROVIDE COVERAGE ABOVE AND BELOW FLOATING CEILINGS, REFER TO ARCHITECTURAL PLANS.

MECHANICAL GENERAL NOTES:

THESE NOTES APPLY TO ALL MECHANICAL SHEETS AND TRADES, INCLUDING BUT NOT LIMITED TO, FIRE PROTECTION, PLUMBING, VENTILATION, PIPING AND TEMPERATURE CONTROL.

1. DRAWINGS SHOWING LOCATIONS OF EQUIPMENT, DUCTWORK, PIPING, ETC. ARE DIAGRAMMATIC AND MAY NOT ALWAYS REFLECT EXACT INSTALLATION CONDITIONS. DRAWINGS SHOW THE GENERAL ARRANGEMENT OF DUCTWORK, PIPING, EQUIPMENT, ETC., AND MAY NOT INCLUDE ALL OFFSETS AND FITTINGS REQUIRED FOR COMPLETE INSTALLATION. THE DRAWINGS SHALL BE FOLLOWED AS CLOSELY AS ACTUAL BUILDING CONSTRUCTION AND THE WORK OF OTHERS WILL PERMIT.
2. DO NOT SCALE DRAWINGS. VERIFY ALL DIMENSIONS AND CLEARANCES FROM ARCHITECTURAL, STRUCTURAL, SUBMITTALS, AND OTHER APPROPRIATE DRAWINGS OR PHYSICALLY AT SITE. REVIEW ALL DRAWINGS, INCLUDING THOSE OF OTHER TRADES.
3. COORDINATE ALL WORK WITH ALL OTHER TRADES PRIOR TO INSTALLATION TO PROVIDE CLEARANCES REQUIRED FOR OPERATION, MAINTENANCE, CODE COMPLIANCE, AND TO VERIFY NON-INTERFERENCE WITH OTHER WORK. DO NOT FABRICATE PRIOR TO VERIFICATION OF NECESSARY CLEARANCES FOR ALL TRADES. BRING ANY INTERFERENCES OR CONFLICTS TO THE ATTENTION OF THE ARCHITECT/ENGINEER BEFORE PROCEEDING WITH FABRICATION OR EQUIPMENT ORDERS.
4. REVIEW SPACE REQUIREMENTS OF EQUIPMENT SPECIFIED OR SUBSTITUTED AND MAKE REASONABLE ACCOMMODATIONS IN LAYOUT AND POSITIONING TO PROVIDE PROPER ACCESS.
5. ANY CHANGES REQUIRED TO ELIMINATE CONFLICTS OR THAT RESULT FROM A FAILURE TO COORDINATE SHALL BE MADE BY THE CONTRACTOR WITHOUT ADDITIONAL COST OR EXPENSE TO OTHERS.
6. EACH CONTRACTOR IS RESPONSIBLE FOR ALL COSTS ASSOCIATED WITH ELECTRICAL CHANGES REQUIRED FOR EQUIPMENT PROPOSED THAT DIFFERS FROM THE BASIS OF DESIGN.
7. REFER TO ARCHITECTURAL REFLECTED CEILING PLAN, ELECTRICAL, TECHNOLOGY AUDIO/VISUAL, AND OTHER MECHANICAL PLANS FOR EXACT LOCATIONS OF ALL CEILING MOUNTED DEVICES, OTHER THAN SPRINKLERS.
8. EACH CONTRACTOR IS RESPONSIBLE FOR DAMAGE CAUSED BY THEIR ACTIONS TO WALLS, FLOORS, CEILINGS, AND ROOFS. THE CONTRACTOR WHOSE WORK CAUSES DAMAGE IS RESPONSIBLE FOR PATCHING TO MATCH ORIGINAL CONSTRUCTION, FIRE RATING, AND FINISH.
9. IN AREAS WITH DRYWALL CEILINGS COORDINATE LOCATIONS OF ACCESS PANELS WITH THE GC FOR ACCESS TO VALVES, DUCTWORK ACCESSORIES, DAMPERS, ETC. COORDINATE PANEL TYPE AND COLOR WITH ARCHITECT. NOTIFY THE GC OF THE REQUIRED ACCESS PANELS PRIOR TO BIDDING.
10. SEAL ALL FLOOR, WALL, AND ROOF PENETRATIONS AIRTIGHT WHERE CONDUITS, PIPING, AND DUCTS PENETRATE. PENETRATIONS THROUGH EXTERIOR WALLS AND ROOF SHALL BE SEALED AIRTIGHT WITH WATERPROOFING MATERIALS RECOMMENDED BY MANUFACTURER FOR OUTDOOR USE.
11. CAULK ALL PIPE AND DUCT PENETRATIONS OF FULL HEIGHT NON-FIRE RATED WALL, PARTITION, FLOOR, AND ROOF ASSEMBLIES. THIS IS ESSENTIAL TO PREVENT NOISE TRANSMISSION FROM ONE ROOM TO ANOTHER AND TO PROVIDE THE DESIRED NC LEVELS WITHIN ROOMS.
12. WHERE PIPES AND DUCTS ARE SHOWN TO PENETRATE FLOORS, PROVIDE SLEEVED OPENINGS WITH THE TOP EDGE RAISED ABOVE FLOOR SURFACE IN ACCORDANCE WITH ALL RELEVANT SPEC SECTIONS. SEAL SLEEVE PERIMETER TO BE WATERTIGHT.
13. EQUIPMENT SIZES AND SERVICE CLEARANCE REQUIREMENTS VARY BETWEEN DIFFERENT MANUFACTURERS. CONSULT APPROVED SHOP DRAWINGS FOR EQUIPMENT SIZES AND REQUIRED SERVICE CLEARANCES. COORDINATE WITH LAYOUT OF EQUIPMENT PADS, PIPING, DUCTWORK, ETC.
14. DO NOT BLOCK TUBE PULL OR EQUIPMENT SERVICE CLEARANCES.
15. MAINTAIN MINIMUM 3'-6" CLEARANCE IN FRONT OF ALL ELECTRICAL PANELS, MOTOR STARTERS, SWITCHES, AND DISCONNECTS.
16. PROVIDE CONCRETE EQUIPMENT PAD FOR ALL FLOOR MOUNTED EQUIPMENT. PAD SHALL EXTEND MINIMUM 6" BEYOND ALL SIDES OF EQUIPMENT.
17. DO NOT SUPPORT EQUIPMENT, PIPING, OR DUCTWORK FROM METAL DECKING OR OTHER NON-STRUCTURAL BUILDING ELEMENTS. ANCHORS EMBEDDED IN CONCRETE SHALL BE CRACKED CONCRETE APPROVED IN ACCORDANCE WITH SPECIFICATIONS.

IMEG
1800 DEMING WAY, SUITE 200
MIDDLETON, WI 53562
608.223.9400 FAX: 608.836.0415
www.imegcorp.com
PROJECT # 170011400.00

IMEG CORP RESERVES PROPRIETARY RIGHTS, INCLUDING COPYRIGHTS, TO THIS DRAWING AND THE DATA SHOWN THEREON. SAID DRAWING AND/OR DATA ARE THE EXCLUSIVE PROPERTY OF IMEG CORP AND SHALL NOT BE USED OR REPRODUCED FOR ANY OTHER PROJECT WITHOUT THE EXPRESS WRITTEN APPROVAL AND PARTICIPATION OF IMEG CORP. © 2017 IMEG CORP.

REFERENCE SCALE IN INCHES
0 1 2 3

OPN ARCHITECTS
301 N BROOM STREET #100
MADISON, WI 53703
608-819-0260 PHONE
www.opnarchitects.com
opn@opnarchitects.com

All reports, plans, specifications, computer files, field data, notes and other documents and instruments prepared by OPN Architects, Inc. as instruments of service shall remain the property of OPN Architects, Inc. OPN Architects, Inc. shall retain all common law, statutory and other reserved rights, including the copyright thereto.

© 2017 OPN Architects, Inc.

Owner
City of Madison Fire Department
314 W. Dayton St.
Madison, WI 53703

Project
Madison Fire Station 14
3201 Dairy Drive
Madison, WI 53718

Civil Engineer
Snyder & Associates, Inc
5010 Voges Rd
Madison WI, 53718
P. 608-838-0444

Structural Engineer
IMEG
1800 Deming Way #200
Middleton, WI 53562
P. 608-223-9600

Mechanical Engineer
IMEG
1800 Deming Way #200
Middleton, WI 53562
P. 608-223-9600

Electrical Engineer
IMEG
1800 Deming Way #200
Middleton, WI 53562
P. 608-223-9600

Key Plan

Sheet Issue Date
BID DOCUMENTS 11/03/17

Revision Date

Drawing
FIRE PROTECTION COVER SHEET

City of Madison Contract No. **8027**
OPN Project No. **17207000**

F000

FIRE SPRINKLER USAGE SCHEDULE

NOTES:
1. SEE FLOOR PLANS FOR ZONING REQUIREMENTS.
2. SPRINKLER SHALL HAVE COLOR CODED BULB THERMAL ELEMENT.
3. ALL SPRINKLERS SHALL BE UL LISTED.
4. CONTRACTOR TO VERIFY SPRINKLER REQUIREMENTS BASED ON ACTUAL INSTALLATION, USAGE, ARCHITECTURAL CEILING PLAN AND NFPA 13 REQUIREMENTS.
5. TAG NAME IS PRIMARILY FOR IDENTIFIYING SPRINKLERS IN SUBMITTALS. IT MAY OR MAY NOT BE FOUND ELSEWHERE ON THE DRAWINGS. CONTRACTOR TO SUBMIT ALL SPRINKLER TYPES TO BE USED.
6. AREAS ARE GENERAL IN NATURE. CONTRACTOR TO MATCH UNSCHEDULED AREAS TO SIMILAR SPACES.

AREA TYPE (NOTE 1 & 6)	AREA HAZARD	SPRINKLER TAG NAME (NOTE 4 & 5)	SPRINKLER TYPE	RESPONSE CATEGORY	FINISH	TEMPERATURE RATING	MANUFACTURER & MODEL	NOTES
AREAS WITH CEILING UNLESS NOTED OTHERWISE	SEE PLANS	SPR-1	CHROME PLATED	QUICK	ROUGH BRASS	155	VIKING VK, RELIABLE F1FR, TYCO TY-FRB, VICTAULIC V2708	NOTE 2, 3
JANITOR CLOSETS AND OTHER AREAS WITHOUT CEILING	SEE PLANS	SPR-2	UPRIGHT	QUICK	ROUGH BRASS	155	VIKING VK, RELIABLE F1FR, TYCO TY-FRB, VICTAULIC V2704	NOTE 3
GARAGE DOORS	SEE PLANS	SPR-3	EXTENDED COVERAGE SIDEWALL	QUICK	ROUGH BRASS	155	VIKING VK, RELIABLE F1FR, TYCO VICTAULIC	NOTE 3
APPARATUS BAY, MEZZANINE	SEE PLANS	SPR-4	UPRIGHT	QUICK	ROUGH BRASS	200	VIKING VK, RELIABLE, TYCO, VICTAULIC	NOTE 3

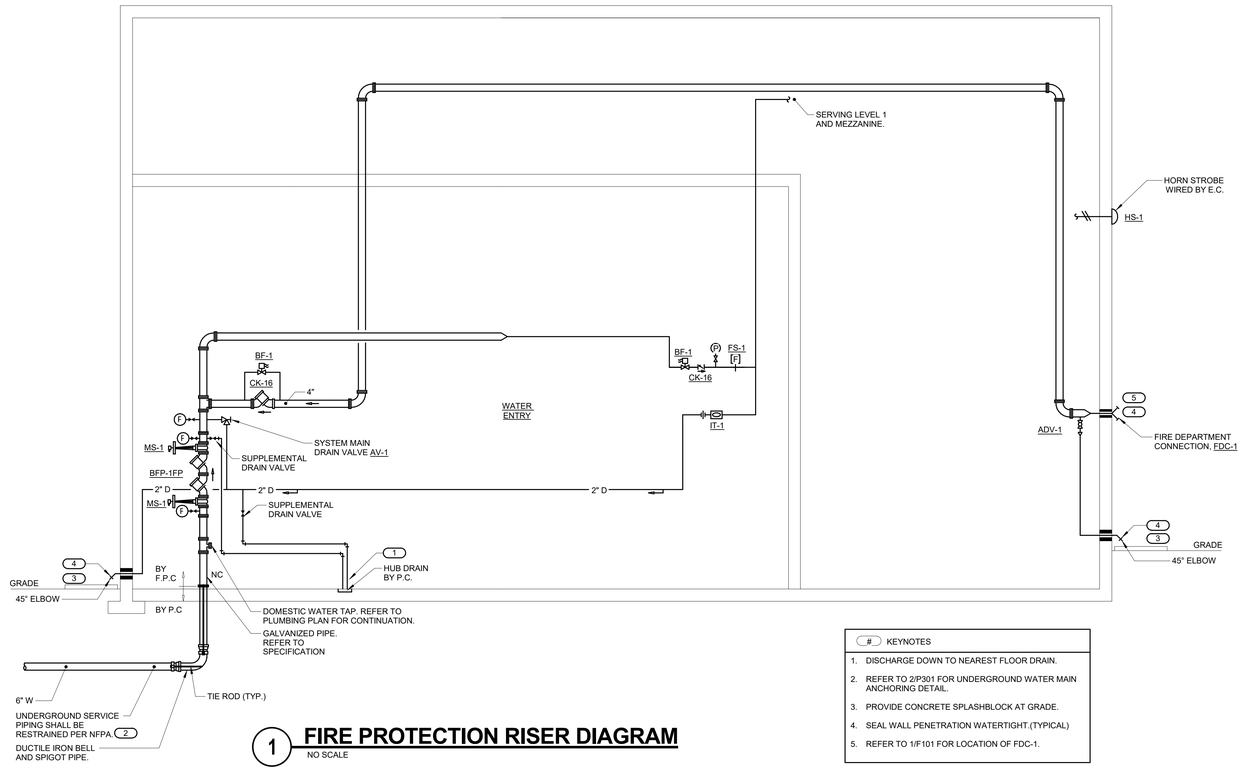

1 FIRE PROTECTION RISER DIAGRAM

NO SCALE

KEYNOTES
1. DISCHARGE DOWN TO NEAREST FLOOR DRAIN.
2. REFER TO 2/P301 FOR UNDERGROUND WATER MAIN ANCHORING DETAIL.
3. PROVIDE CONCRETE SPLASHBLOCK AT GRADE.
4. SEAL WALL PENETRATION WATERTIGHT.(TYPICAL)
5. REFER TO 1/F101 FOR LOCATION OF FDC-1.

FIRE PROTECTION MATERIAL LIST

TAG NAME	DESCRIPTION	MANF. & MODEL
ADV-1	AUTOMATIC DRIP VALVE, 175 PSI WP, BRASS BAR, BERYLLIUM COPPER SPRING AND RETAINING RING, CLOSING PRESSURE 7 PSI WITH INCREASING PRESSURE, OPENING PRESSURE 5 PSI WITH DECREASING PRESSURE, 1/2" NPT INLET AND 1/4" NPT DRAIN OUTLET.	VIKING B-1 TYCO AD-1 RELIABLE C
AV-1	ANGLE VALVE, 1/2" TO 2", 175 PSI, BRONZE BODY, INTEGRAL SEAT, SOFT DISC, HANDWHEEL, THREADED. UL	UNITED 126S UL NIBCO KT-67-UL / T-301-W KENNEDY 98 SD, FPPI
BF-1	2" TO 12" BUTTERFLY VALVE, 175 PSI WP. LUGGED OR GROOVED TYPE. IRON BODY, ALUMINUM BRONZE OR EPDM COATED IRON DISC, STAINLESS STEEL STEM AND SCREWS, EPDM SEAT, INTEGRAL MONITOR SWITCH, RATED FOR DEAD END SERVICE, UL/FM. SLOW CLOSE BUTTERFLY VALVE. 175 PSI WP. BRONZE BODY, TYPE 304 STAINLESS STEEL ELASTOMER COATED DISK, SLOW CLOSE MANUAL OPERATOR WITH INTEGRAL TAMPER SWITCH, GROOVED OR THREADED ENDS. UL/FM.	2" TO 12": GEM, TYCO, KENNEDY, NIBCO, VICTAULIC, KENNEDY, ANVILSTAR 1" TO 2-1/2": MILWAUKEE BB-SCS OR APPROVED EQUAL
BFP-1FP	VERTICAL ORIENTED DOUBLE CHECK BACKFLOW PREVENTER WITH SPRING LOADED CHECK VALVES. CAST IRON CONSTRUCTION, WITH BRONZE, PLASTIC OR STAINLESS STEEL INTERNAL PARTS AND STAINLESS STEEL SPRINGS. OS&Y RISING STEM SHUTOFF GATE VALVES ON BOTH SIDES OF CHECK VALVES. UNITS SHALL INCLUDE FOUR TEST COCKS WITH SHUT-OFF VALVES AND SHALL BE BACKFLOW TESTED AT THE FACTORY. RATED FOR 175 PSI AT 33 DEGREES F. TO 140 DEGREES F. MAXIMUM PRESSURE DROP 8 PSI AT 10 FPS REGARDLESS OF SIZE. FLOW PRESSURE DROP CURVES SHALL BE SUBMITTED. ALL PARTS TO BE SERVICEABLE WITHOUT REMOVING UNIT FROM LINE. APPROVED BY: USC FCCC & HR, AWWA C510-92, ASSE 1015, IAPMO AND SBCCI LISTED, UL/FM.	WATTS SERIES 007 & 709 CONBRACO SERIES 40-100 FEBCO 850 WILKINS 950XL & 350
CK-16	2-1/2" TO 12" SWING CHECK VALVE, 175 PSI WP, FLANGED OR GROOVED, IRON BODY, BRONZE MOUNTED, BRONZE SEAT RING AND RUBBER CLAPPER FACING, SWING TYPE, UL/FM.	VIKING D-1/G-1 TYCO CV-2 RELIABLE D OR G KENNEDY 126A OR 426
FDC-1	EXPOSED FIRE DEPT. INLET CONNECTION, POLISHED CHROME PLATED TWO-WAY INLET BODY WITH DROP CLAPPERS, PIN LUG SWIVELS, KNOX STAINLESS STEEL LOCKING FDC CAPS WITH MATCHING THREADS AND CHROME FINISH, POLISHED CHROME PLATED WALL PLATE LABELED "AUTO. SPR." 4" X 2-1/2" X 2-1/2". UL. THREADS TO MATCH LOCAL FIRE DEPARTMENT. CONTRACTOR TO COORDINATE PURCHASE OF KNOX LOCKING CAP WITH LOCAL FIRE DEPARTMENT.	POTTER-ROEMER 5750 SERIES, CROKER 6430 SERIES, GUARDIAN 6124, ELKHART 156.
FS-1	FLOW SWITCH - VANE TYPE FOR USE ON WET PIPE SPRINKLER SYSTEM TO DETECT A MINIMUM FLOW OF 10 GPM. TWO SINGLE POLE DOUBLE THROW SWITCHES WITH PNEUMATIC RETARD-ADJUSTABLE FROM 0-90 SECONDS WITH AUTOMATIC RESET, TAMPER RESISTANT METAL HOUSING. UL/FM.	SYSTEM SENSOR WFD SERIES, POTTER ELECTRIC VSR-F
HS-1	WATHERPROOF FIRE PROTECTION AUDIO/VISUAL NOTIFICATION APPLIANCE, ELECTRONIC HORN WITH HIGH-INTENSITY STROBE, SQUARE HOUSING, SEMI-FLUSH WALL MOUNT, RED WITH WHITE LETTERING, 75 CANDELA RATING AT -31 DEGREES FAHRENHEIT, 120 VAC, U.L. LISTED FOR WET LOCATIONS, PROVIDE WITH WEATHERPROOF BACK BOX.	POTTER FHS-120 OR APPROVED EQUAL
IT-1	1" INSPECTORS TEST AND DRAIN VALVE WITH INTEGRAL SIGHT GLASS, BALL VALVE WITH INTEGRAL LABELED PLATE SHOWING OFF-TEST-DRAIN POSITIONS. FURNISHED WITH TEST ORIFICE GIVING FLOW EQUIVALENT TO ONE SPRINKLER OF A TYPE HAVING THE SMALLEST ORIFICE INSTALLED ON THE SYSTEM, UL.	RELIABLE B W/1" BALL VALVE TYCO F350 AGF MODEL 1000
MS-1	MONITOR SWITCH - ELECTRIC, ONE SINGLE POLE, DOUBLE THROW CONTACT, CAST ALUMINUM HOUSING WITH CORROSION RESISTANT PARTS, WITH J-BOLTS FOR MOUNTING. UL/FM. VERIFY ELECTRICAL CHARACTERISTICS WITH ELECTRICAL CONTRACTOR PRIOR TO PURCHASE.	POTTER ELECTRIC OSYSU-1 SYSTEM SENSOR OSY2

OPN ARCHITECTS
301 N BROOM STREET #100
MADISON, WI 53703
608-819-0260 PHONE
www.opnarchitects.com
opn@opnarchitects.com

All reports, plans, specifications, computer files, field data, notes and other documents and instruments prepared by OPN Architects, Inc. as instruments of service shall remain the property of OPN Architects, Inc. OPN Architects, Inc. shall retain all common law, statutory and other reserved rights, including the copyright thereto.

© 2017 OPN Architects, Inc.

Owner
City of Madison Fire Department
314 W. Dayton St.
Madison, WI 53703

Project
Madison Fire Station 14
3201 Dairy Drive
Madison, WI 53718

Civil Engineer
Snyder & Associates, Inc
5010 Voges Rd
Madison WI, 53718
P. 608-838-0444

Structural Engineer
IMEG
1800 Deming Way #200
Middleton, WI 53562
P. 608-223-9600

Mechanical Engineer
IMEG
1800 Deming Way #200
Middleton, WI 53562
P. 608-223-9600

Electrical Engineer
IMEG
1800 Deming Way #200
Middleton, WI 53562
P. 608-223-9600

Key Plan

Sheet Issue Date
BID DOCUMENTS 11/03/17

Revision Date

Drawing
RISER DIAGRAM - FIRE PROTECTION

City of Madison Contract No. **8027**
OPN Project No. **17207000**

F100

IMEG
1800 DEMING WAY, SUITE 200
MIDDLETON, WI 53562
608.223.9600 FAX: 608.836.0415
www.imegcorp.com
PROJECT # 170011A0.00

IMEG CORP RESERVES PROPRIETARY RIGHTS, INCLUDING COPYRIGHTS, TO THIS DRAWING AND THE DATA SHOWN THEREON. SAID DRAWING AND/OR DATA ARE THE EXCLUSIVE PROPERTY OF IMEG CORP AND SHALL NOT BE USED OR REPRODUCED FOR ANY OTHER PROJECT WITHOUT THE EXPRESS WRITTEN APPROVAL AND PARTICIPATION OF IMEG CORP. © 2017 IMEG CORP.

REFERENCE SCALE IN INCHES
0 1 2 3

KEYNOTES: #

1. INSTALL BFP-1FP IN VERTICAL CONFIGURATION ABOVE WATER SERVICE.
2. LOCATE BF-1, CK-16, FS-1, AND IT-1 WITHIN WATER ROOM PER 1/F100.
3. PIPING SHALL BE ROUTED ABOVE STRUCTURAL CEILING LID OF ELECTRICAL/WATER ROOM. STACK PIPING ON EAST WALL BELOW TRANSLUCENT WALL PANELS. COORDINATE ROUTING WITH OTHER TRADES.
4. PIPING SHALL BE ROUTED UP THROUGH STRUCTURAL TRUSSES OF APPARATUS BAY. COORDINATE ROUTING WITH OTHER TRADES.

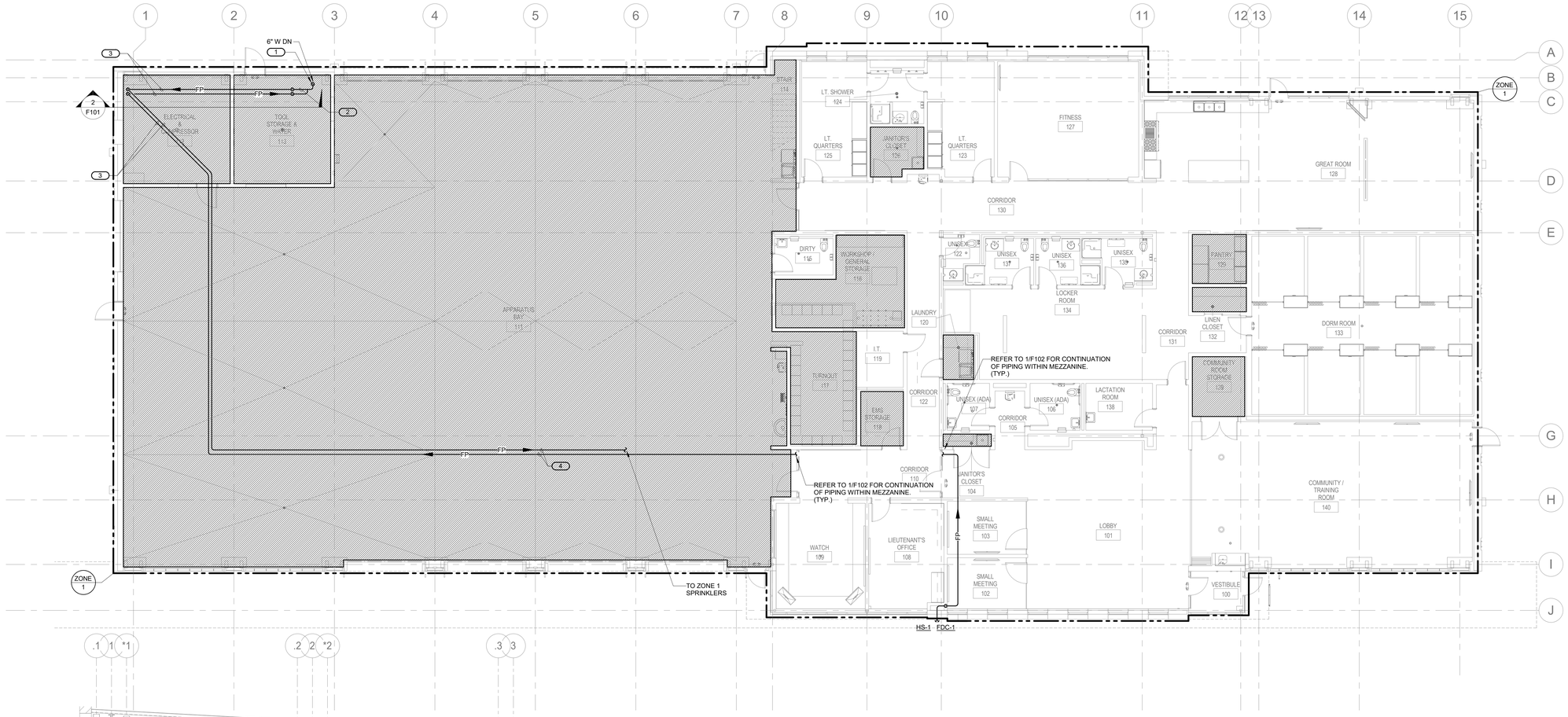

1 FLOOR PLAN LEVEL 1 - FIRE PROTECTION

1/8" = 1'-0"

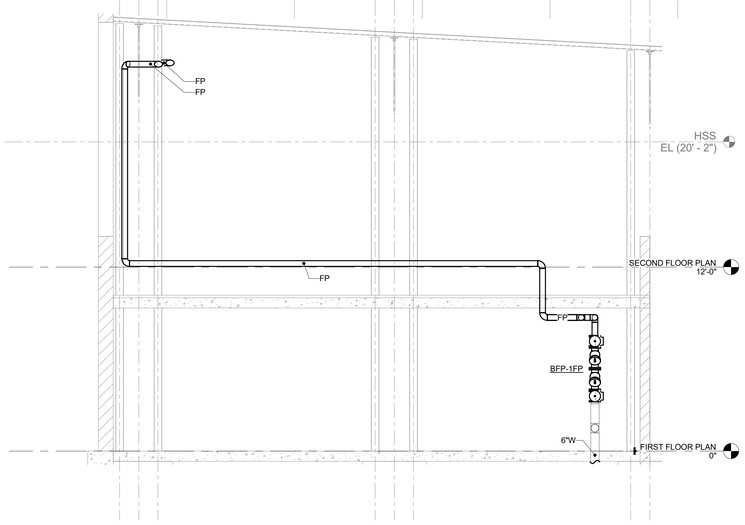

2 SECTION FOR ELECTRICAL & WATER ROOM - FIRE PROTECTION

1/4" = 1'-0"

OPN ARCHITECTS
301 N BROOM STREET #100
MADISON, WI 53703
608-819-0260 PHONE
www.opnarchitects.com
opn@opnarchitects.com

All reports, plans, specifications, computer files, field data, notes and other documents and instruments prepared by OPN Architects, Inc. as instruments of service shall remain the property of OPN Architects, Inc. OPN Architects, Inc. shall retain all common law, statutory and other reserved rights, including the copyright thereto.

© 2017 OPN Architects, Inc.

Owner
City of Madison Fire Department
314 W. Dayton St.
Madison, WI 53703

Project
Madison Fire Station 14
3201 Dairy Drive
Madison, WI 53718

Civil Engineer
Snyder & Associates, Inc
5010 Voges Rd
Madison WI, 53718
P. 608-838-0444

Structural Engineer
IMEG
1800 Deming Way #200
Middleton, WI 53562
P. 608-223-9600

Mechanical Engineer
IMEG
1800 Deming Way #200
Middleton, WI 53562
P. 608-223-9600

Electrical Engineer
IMEG
1800 Deming Way #200
Middleton, WI 53562
P. 608-223-9600

Key Plan

Sheet Issue Date
BID DOCUMENTS 11/03/17

Revision Date

IMEG
1800 DEMING WAY, SUITE 200
MIDDLETON, WI 53562
608.223.9600 FAX: 608.836.0415
www.imegcorp.com
PROJECT # 17001140.00

IMEG CORP RESERVES PROPRIETARY RIGHTS, INCLUDING COPYRIGHTS, TO THIS DRAWING AND THE DATA SHOWN THEREON. SAID DRAWING AND/OR DATA ARE THE EXCLUSIVE PROPERTY OF IMEG CORP AND SHALL NOT BE USED OR REPRODUCED FOR ANY OTHER PROJECT WITHOUT THE EXPRESS WRITTEN APPROVAL AND PARTICIPATION OF IMEG CORP. © 2017 IMEG CORP.

REFERENCE SCALE IN INCHES
0 1 2 3

Drawing
FLOOR PLAN LEVEL 1 - FIRE PROTECTION

City of Madison Contract No. **8027**
OPN Project No. **17207000**

F101

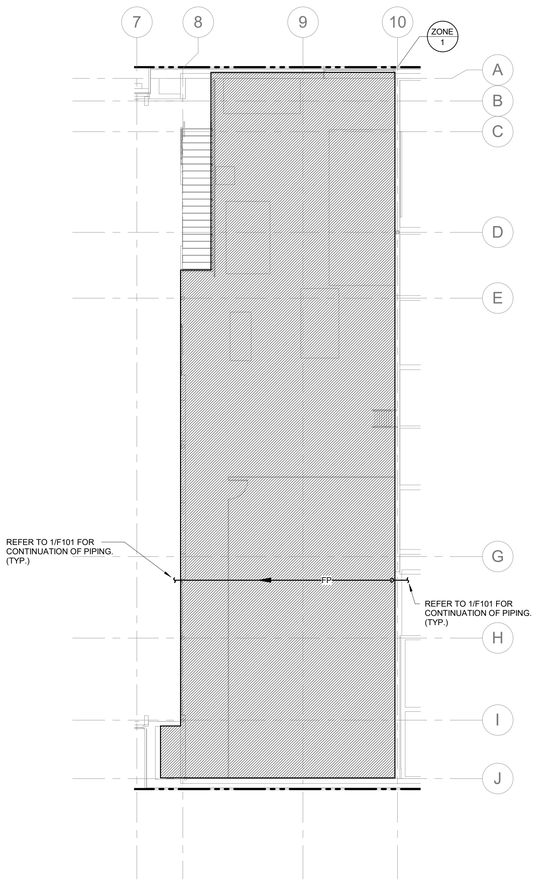

NORTH

1 MEZZANINE PLAN - FIRE PROTECTION

1/8" = 1'-0"

OPN ARCHITECTS

301 N BROOM STREET #100
MADISON, WI 53703
608-819-0260 PHONE
www.opnarchitects.com
opn@opnarchitects.com

All reports, plans, specifications, computer files, field data, notes and other documents and instruments prepared by OPN Architects, Inc. as instruments of service shall remain the property of OPN Architects, Inc. OPN Architects, Inc. shall retain all common law, statutory and other reserved rights, including the copyright thereto.

© 2017 OPN Architects, Inc.

Owner

City of Madison Fire Department
314 W. Dayton St.
Madison, WI 53703

Project

Madison Fire Station 14
3201 Dairy Drive
Madison, WI 53718

Civil Engineer

Snyder & Associates, Inc
5010 Voges Rd
Madison WI, 53718
P. 608-838-0444

Structural Engineer

IMEG
1800 Deming Way #200
Middleton, WI 53562
P. 608-223-9600

Mechanical Engineer

IMEG
1800 Deming Way #200
Middleton, WI 53562
P. 608-223-9600

Electrical Engineer

IMEG
1800 Deming Way #200
Middleton, WI 53562
P. 608-223-9600

Key Plan

Sheet Issue Date

BID DOCUMENTS 11/03/17

Revision Date

IMEG
1800 DEMING WAY, SUITE 200
MIDDLETON, WI 53562
608.223.9600 FAX: 608.836.0415
www.imegcorp.com
PROJECT # 170011400.00

IMEG CORP RESERVES PROPRIETARY RIGHTS, INCLUDING COPYRIGHTS, TO THIS DRAWING AND THE DATA SHOWN THEREON. SAID DRAWING AND/OR DATA ARE THE EXCLUSIVE PROPERTY OF IMEG CORP AND SHALL NOT BE USED OR REPRODUCED FOR ANY OTHER PROJECT WITHOUT THE EXPRESS WRITTEN APPROVAL AND PARTICIPATION OF IMEG CORP. © 2017 IMEG CORP.

REFERENCE SCALE IN INCHES
0 1 2 3

Drawing

MEZZANINE PLAN - FIRE PROTECTION

City of Madison Contract No. **8027**
OPN Project No. **17207000**

F102